X3-45 VIP

REV.	DATE	O.C.	EFF.	DESCRIPTION	PAGE(S)	BY	CHECKED	APPROVED
0	2015-09-07	2015007	H-6145 H-6175	NAE radiator electric fan preliminary	1.1 to 4.1	M.P.	C.Lem.	C.Lem.
1	2016-09-02	2016094	H-6180	NAE phase 2 (condenser fan speed becomes variable)	ALL	M.P.	C.Lem.	C.Lem.
2	2016-12-16	2016094	H-6145 H-6175	Preliminary retrofit: Modify small A/C system: Ground condenser,can network and add CB7	F, 2.2, 3.1, 5.1, 6.1, 18.3	M.P.	C.Lem.	C.Lem.
3	2016-12-19	2016094	H-6180	Start of production: Connected ACB Supply with ABS supply Corrected air horn and luggages lighting and optional flasher marker lights view Modified circuit # on AFSS and connector # on fan radiator	0, 4.1, 9.1, 13.1, 25.1,26.2, 38.1, 39.1	M.P.	C.Lem.	C.Lem.
4	2017-01-10	2016094	H-6145 H-6175 H-6180	Preliminary retrofit and start of production: Modify supply for level low: Was F42 (12v) become F53 (24v)	0, 4.1, 4.2, 32.1	M.P.	C.Lem.	C.Lem.
5	2017-01-17	2016094	 H-6175 H-6180	Special Request RH console: Lugg. Bay door locks & Lugg. Bay Lights Lugg. Bay door locks & Entrance Lights Keyless and luggage supply AE43 become 24VD, Se23 move to AE54	0, A, K, H, 2.1, 4.1, 4.2, 6.1, 7.1, 14.1, 18.2, 19.1, 25.1, 29.1, 33.1, 33.2, 39.1	E.L. M.P.	C.Lem.	C.Lem.

X3-45 VIP

REV.	DATE	O.C.	EFF.	DESCRIPTION	PAGE(S)	BY	CHECKED	APPROVED
6	2017-03-23	2016094 H-6175 H-6180		Lugg. Bay door locks & Driver Light and Lugg. Bay door locks & Lugg. Bay Lights	0, 2.1, 4.1, 4.2, 7.1, 19.1, 25.1, 29.1, 33.1,	E.L.	C.Lem.	C.Lem.
7	2017-03-2	2017032	H-6212	NAE update : L282 connector (Fire extinguisher) relocation. Optional marker/Flasher identification correction	P0, P2.1, P20.1, P20.2, P26.2 P38.1	C.Lrv.	C.Lem.	C.Lem.
8	2017-04-14	2017055	J-6239	Preliminary retrofit and start of production Full A/C only: Removed R26 preheater relay (option not used) Corrected elctronic ground on Mo12 water pump	0, 2.1, 2.2, 18.2	M.P.	C.Lem.	C.Lem.
9	2017-05-17	2017066 2017077	J-6223 J-6239	WCL option integrated Trailer Interface	0.2, 2.1, 2.2, 3.1, 4.1, 5.1, 6.1, 7.1, 19.1, 21.1, 26.2, 26.3, 26.4, 36.1, A, B, E, F, G, H, J, K, L	Gab M.P.	C.Lem. C.Lem.	C.Lem. C.Lem.
10	2017-07-13	2017091		Electric trailer option	0, 5.1, 26.4,	M.P.	C.Lem.	C.Lem.
11	2017-11-17	2017071 2017138	J-6281	ELD/ITS Gateway ISM Harness WCL Option	0, A, E, G, J, K, L, 1.1, 2.1, 2.2, 3.2, 4.1, 4.2, 5.1, 6.2, 18.2, 30.2, 36.1, 42.4	G.P.	C.Lem.	C.Lem.
12	2017-12-06	2017040	J-6295	ABS8,FLR21 and ACB Network	C,C1.1,C1.2,0.2,6.2,16.1,19.1 25.1,39.1	S.D.	A.B.	A.B.

X3-45 VIP

REV.	DATE	O.C.	EFF.	DESCRIPTION	PAGE(S)	BY	CHECKED	APPROVED
13	2018-04-05	2017020	J-6313	Catch Tank	0, 14.1, C, C1, G	G.P.	C.Lem.	C.Lem.
14	2018-05-25	2018011	K-6360	RELS UPDATE	0. 15.1, C1, G 3.2	G.P.	C.Lem.	C.Lem.
15	2018-06-21	2018087	K-6392	RH Console switches for driver's lights	0, 4.2, 10.1, 19.1, 33.1	E.L.	C.Lem.	C.Lem.
16	2018-10-05	2018087	K-6412	Effective VIN correction	0,19.1	E.L.	C.Lem.	C.Lem.
17	2019-01-09	2018055 2018110	K-6440 K-6440	OBD19 GIGAVAC	0, 8.1, 14.2, 15.1, C1, G, H 3.1	G.P. G.P.	C.Lem. C.Lem.	C.Lem. C.Lem.
18	2019-06-12	2015142	6492	OPP2	0,10.1.20.1,20.2,26.2,C1,G	S.B.	C.Lem.	C.Lem.
19	2019-07-05	2019093 2018149	L-6516 L-7684	Dashboard Foot Damper Obsolescence TPMS Gateway UPDATE	0, G, 18.1 6.2, 39.1 19.1	Gab Gab E.L.	C.Lem. A.B.	C.Lem. A.B.
20	31/01/2020	2020002	6611	Uree PWR	0, 3.1, 5.1, 14.2, G, C	S.B.	C.Lem.	C.Lem.
21	2020-03-17	2019037	L-6666	Driver assist Digital dash light dimmer	0, A, C1, 2.1, 4.1, 6.2, 10.1, 16.2, 39.1 19.1	M.P. G.P.	M.L. C.Lem.	M.L. C.Lem.
22	2021-02-01	2021001	M6663	OBD21	0,4.1,4.2,3.2,5.1,6.2,12.1,14.1 29.1,C1,G	S.B.	C.Lem.	C.Lem.
23	2021-08-10	2021072	N-6724	eMIRROR Ready Gateway Power update	0, 2.1, 4.2, 31.2, A, C, G, L 4.1, 41.1	S.C. S.B.	M.L.. D.T.	M.L. D.T.

X3-45 VIP

REV.	DATE	O.C.	EFF.	DESCRIPTION	PAGE(S)	BY	CHECKED	APPROVED
24	2021-12-10	2022001	N6739	OBD22 UpDate	0, 14.2, G, C1 18.2	S.B.	G.P.	G.P.
25	2022-05-18	2021070	P6787	TPMS, UPDATE	0,39.1,C1,G,1.1	S.B.	M.L	M.L
26	2022-10-27	NA		UPDATE	0, 4.1, 41.1, 31.2, A, 30.3	S.B.	D.T	D.T
26-1	2023-03-19	2023045		Diode Trailer	0, 26.4, H	G.P.	EO	EO
27	2023-03-30	2022123		Fan Condenser Spal	0, 5.1, 18.2	P.G.	E.O	E.O
28	2023-12-15	2022123		Fan Condenser Spal and Update	0,3.1,14.1,18.2,F,14.2	S.B.	E.O	E.O
29	2024-04-04	2023115		Release2024R1 Update	0,14.2,25.1,29.1,33.2,34.1,C 1 H,K,G 5.1,L	A.S. A.S	E.O E.O	E.O E.O
30	2024-12-11	2024096	S-4330	MCM2	0.4, 3.2, 4.2, 6.1, 6.2, 7.1, 9.1 12.1, 14.1, 15.1, 26.1, 29.1, 38.1	PG	AB	AB
31	2025-01-21	2024096	S-4330	MCM2	0.4, C1, E, F, G, H, J, K, L	PG	AB	AB
32	2025-01-21	2024096	S-4330	MCM2	0.4, B1, B2	PG	AB	AB

Wiring diagram pages list

Wiring diagram pages		D		I		S	
Multiplex outputs list	**B1**	Dash backlighting	19.1	Ignition	3.2	Slide out front left	20.1
Multiplex inputs list	**B2**	Driver's lights	19.1			Slide out rear left	20.2
Multiplex error messages	**B3**	Driver window	30.1	**K**		Spares wires	8.1
Layout vehicule - harness	**C1**	Driver seat	17.1	Keyless entry system	29.1	Stop lights	26.2
Sound system	**C2**	Docking lights	26.5			Steering control ZF	37.2
Pins configuration	**D**					Steering multifunctions	41.1
Circuits list	**E**	**E**		**L**		Step lights	29.1
Circuit breakers list	**F**	Engine ECU	14.1	Level low	32.1	Sun visor	41.1
Connectors list	**G**	Engine heater	14.1	Luggage doors lock/unlock	33.1 - 33.2		
Diodes list	**H**	Engine start	3.2	Luggage cmpt. lighting	25.1		
Resistors list	**J**	Engine & RJB cmpt. Light	25.1				
Relays list	**K**	Entrance door light	29.1	**M**			
Fuses list	**L**	ESP	16.1	Main dist. ignition & batt.	3.1		
Wire identification chart	**M**	Engine brake	12.1	Markers lights	26.1 - 26.2	**T**	
				Mirrors	31.1	Tag	32.1
A		**F**		Multiplex power distribution	7.1	Tail & licence lights	26.2
ACB	39.1	Fast idle	14.1	Multiplex network	6.1 - 6.2	Tire pressure monitor	39.1
Air dryer	37.1	Fans radiator	13.1			Trailer package	26.4
Alternators	1.1	Fire alarm	38.1			Trailer park brake	12.2
		Fire suppression system	38.1	**P**		Transmission ECU	15.1
		Flashers	26.1-26.2	Park brake sensor	12.1		
B		Fog lights	26.5	Park brake trailer sensor	12.2	**U**	
Back-up warnings	26.3	Fuel gauge	10.1	Power distribution FJB 12V	4.1	Urea system	14.2
Batteries & Equalizer	1.1			Power distribution FJB 24V	4.2		
Brake pedal sensor	12.1	**G**		Pwr dist. RJB 12V & 24V	5.1		
		Grounds electronic	2.1	Power outlets 12V	30.2	**V**	
		Grounds chassis	2.2			Volvo link TGW	37.1
C							
Cigar lighter	30.2	**H**		**R**		**W**	
Clearance lights	26.1-26.2	Hazard	26.1	Retarder	12.1 - 15.1	Windows ajar	27.1
Cluster	10.1	Head lights	26.1	RJB fan	1.1	Wipers & washer	34.1
Cornering lights	26.5	Horn	9.1				
Cruise control	14.1	Hvac defroster	18.1				
Converter interface	21.1	Hvac passenger full	18.2				
Charging system	3.2	Hvac passenger small	18.3				

Wiring diagram pages list

Wiring diagram pages		D		I		S	
Multiplex outputs list	**B1**	Dash backlighting	19.1	Ignition	3.2	Slide out front left	20.1
Multiplex inputs list	**B2**	Driver's lights	19.1			Slide out rear left	20.2
Multiplex error messages	**B3**	Driver window	30.1	**K**		Spares wires	8.1
Layout vehicule - harness	**C1**	Driver seat	17.1	Keyless entry system	29.1	Stop lights	26.2
Sound system	**C2**	Docking lights	26.5			Steering control ZF	37.2
Pins configuration	**D**					Steering multifunctions	41.1
Circuits list	**E**	**E**		**L**		Step lights	29.1
Circuit breakers list	**F**	Engine ECU	14.1	Level low	32.1	Sun visor	41.1
Connectors list	**G**	Engine heater	14.1	Luggage doors lock/unlock	33.1 - 33.2		
Diodes list	**H**	Engine start	3.2	Luggage cmpt. lighting	25.1		
Resistors list	**J**	Engine & RJB cmpt. Light	25.1				
Relays list	**K**	Entrance door light	29.1	**M**			
Fuses list	**L**	ESP	16.1	Main dist. ignition & batt.	3.1		
Wire identification chart	**M**	Engine brake	12.1	Markers lights	26.1 - 26.2	**T**	
				Mirrors	31.1	Tag	32.1
A		**F**		Multiplex power distribution	7.1	Tail & licence lights	26.2
ACB	39.1	Fast idle	14.1	Multiplex network	6.1 - 6.2	Tire pressure monitor	39.1
Air dryer	37.1	Fans radiator	13.1			Trailer package	26.4
Alternators	1.1	Fire alarm	38.1			Trailer park brake	12.2
		Fire suppression system	38.1	**P**		Transmission ECU	15.1
		Flashers	26.1-26.2	Park brake sensor	12.1		
B		Fog lights	26.5	Park brake trailer sensor	12.2	**U**	
Back-up warnings	26.3	Fuel gauge	10.1	Power distribution FJB 12V	4.1	Urea system	14.2
Batteries & Equalizer	1.1			Power distribution FJB 24V	4.2		
Brake pedal sensor	12.1	**G**		Pwr dist. RJB 12V & 24V	5.1		
		Grounds electronic	2.1	Power outlets 12V	30.2	**V**	
		Grounds chassis	2.2			Volvo link TGW	37.1
C							
Cigar lighter	30.2	**H**		**R**		**W**	
Clearance lights	26.1-26.2	Hazard	26.1	Retarder	12.1 - 15.1	Windows ajar	27.1
Cluster	10.1	Head lights	26.1	RJB fan	1.1	Wipers & washer	34.1
Cornering lights	26.5	Horn	9.1			Wheelchair Lift	36.1
Cruise control	14.1	Hvac defroster	18.1				
Converter interface	21.1	Hvac passenger full	18.2				
Charging system	3.2	Hvac passenger small	18.3				

Wiring diagram pages list

Wiring diagram pages		D		I		S	
Multiplex outputs list	**B1**	Dash backlighting	19.1	Ignition	3.2	Slide out front left	20.1
Multiplex inputs list	**B2**	Driver's lights	19.1			Slide out rear left	20.2
Multiplex error messages	**B3**	Driver window	30.1	**K**		Spares wires	8.1
Layout vehicule - harness	**C1**	Driver seat	17.1	Keyless entry system	29.1	Stop lights	26.2
Sound system	**C2**	Docking lights	26.5			Steering control ZF	37.2
Pins configuration	**D**					Steering multifunctions	41.1
Circuits list	**E**	**E**		**L**		Step lights	29.1
Circuit breakers list	**F**	ELD/ITS Gateway	42.4	Level low	32.1	Sun visor	41.1
Connectors list	**G**	Engine ECU	14.1	Luggage doors lock/unlock	33.1 - 33.2		
Diodes list	**H**	Engine heater	14.1	Luggage cmpt. lighting	25.1		
Resistors list	**J**	Engine start	3.2				
Relays list	**K**	Engine & RJB cmpt. Light	25.1	**M**			
Fuses list	**L**	Entrance door light	29.1	Main dist. ignition & batt.	3.1		
Wire identification chart	**M**	ESP	16.1	Markers lights	26.1 - 26.2	**T**	
		Engine brake	12.1	Mirrors	31.1	Tag	32.1
A				Multiplex power distribution	7.1	Tail & licence lights	26.2
ACB	39.1	**F**		Multiplex network	6.1 - 6.2	Tire pressure monitor	39.1
Air dryer	37.1	Fast idle	14.1			Trailer package	26.4
Alternators	1.1	Fans radiator	13.1			Trailer park brake	12.2
		Fire alarm	38.1	**P**		Transmission ECU	15.1
		Fire suppression system	38.1	Park brake sensor	12.1		
B		Flashers	26.1-26.2	Park brake trailer sensor	12.2	**U**	
Back-up warnings	26.3	Fog lights	26.5	Power distribution FJB 12V	4.1	Urea system	14.2
Batteries & Equalizer	1.1	Fuel gauge	10.1	Power distribution FJB 24V	4.2		
Brake pedal sensor	12.1			Pwr dist. RJB 12V & 24V	5.1		
		G		Power outlets 12V	30.2	**V**	
		Grounds electronic	2.1			Volvo link TGW	37.1
C		Grounds chassis	2.2				
Cigar lighter	30.2			**R**		**W**	
Clearance lights	26.1-26.2	**H**		Retarder	12.1 - 15.1	Windows ajar	27.1
Cluster	10.1	Hazard	26.1	RJB fan	1.1	Wipers & washer	34.1
Cornering lights	26.5	Head lights	26.1			Wheelchair Lift	36.1
Cruise control	14.1	Horn	9.1				
Converter interface	21.1	Hvac defroster	18.1				
Charging system	3.2	Hvac passenger full	18.2				
		Hvac passenger small	18.3				

Wiring diagram pages list

Wiring diagram pages		D		I		S	
Multiplex outputs list	**B1**	Dash backlighting	19.1	Ignition	3.2	Slide out front left	20.1
Multiplex inputs list	**B2**	Driver's lights	19.1			Slide out rear left	20.2
Multiplex error messages	**B3**	Driver window	30.1	**K**		Spares wires	8.1
Layout vehicule - harness	**C1**	Driver assist	16.2	Keyless entry system	29.1	Stop lights	26.2
Sound system	**C2**	Driver seat	17.1			Steering control ZF	37.2
Pins configuration	**D**	Docking lights	26.5	**L**		Steering multifunctions	41.1
Circuits list	**E**	**E**		Level low	32.1	Step lights	29.1
Circuit breakers list	**F**	ELD/ITS Gateway	42.4	Line departure warning	16.2	Sun visor	41.1
Connectors list	**G**	Engine ECU	14.1	Luggage doors lock/unlock	33.1 - 33.2		
Diodes list	**H**	Engine heater	14.1	Luggage cmpt. lighting	25.1		
Resistors list	**J**	Engine start	3.2				
Relays list	**K**	Engine & RJB cmpt. Light	25.1	**M**			
Fuses list	**L**	Entrance door light	29.1	Main dist. ignition & batt.	3.1		
Wire identification chart	**M**	ESP	16.1	Markers lights	26.1 - 26.2	**T**	
		Engine brake	12.1	Mirrors	31.1	Tag	32.1
A				Multiplex power distribution	7.1	Tail & licence lights	26.2
		F		Multiplex network	6.1 - 6.2	Tire pressure monitor	39.1
Air dryer	37.1	Fast idle	14.1			Trailer package	26.4
Alternators	1.1	Fans radiator	13.1			Trailer park brake	12.2
		Fire alarm	38.1	**P**		Transmission ECU	15.1
		Fire suppression system	38.1	Park brake sensor	12.1		
B		Flashers	26.1-26.2	Park brake trailer sensor	12.2	**U**	
Back-up warnings	26.3	Fog lights	26.5	Power distribution FJB 12V	4.1	Urea system	14.2
Batteries & Equalizer	1.1	Fuel gauge	10.1	Power distribution FJB 24V	4.2		
Brake pedal sensor	12.1			Pwr dist. RJB 12V & 24V	5.1		
		G		Power outlets 12V	30.2	**V**	
		Grounds electronic	2.1			Volvo link TGW	37.1
C		Grounds chassis	2.2				
Cigar lighter	30.2			**R**		**W**	
Clearance lights	26.1-26.2	**H**		Retarder	12.1 - 15.1	Windows ajar	27.1
Cluster	10.1	Hazard	26.1	RJB fan	1.1	Wipers & washer	34.1
Cornering lights	26.5	Head lights	26.1			Wheelchair Lift	36.1
Cruise control	14.1	Horn	9.1				
Converter interface	21.1	Hvac defroster	18.1				
Charging system	3.2	Hvac passenger full	18.2				
		Hvac passenger small	18.3				

Wiring diagram pages list

Wiring diagram pages		D		I		S	
Multiplex outputs list	B1	Dash backlighting	19.1	Ignition	3.2	Slide out front left	20.1
Multiplex inputs list	B2	Driver's lights	19.1			Slide out rear left	20.2
Multiplex error messages	B3	Driver window	30.1	K		Spares wires	8.1
Layout vehicule - harness	C1	Driver assist	16.2	Keyless entry system	29.1	Stop lights	26.2
Sound system	C2	Driver seat	17.1			Steering control ZF	37.2
Pins configuration	D	Docking lights	26.5	L		Steering multifunctions	41.1
Circuits list	E	E		Level low	32.1	Step lights	29.1
Circuit breakers list	F	ELD/ITS Gateway	42.4	Line departure warning	16.2	Sun visor	41.1
Connectors list	G	Electronics Mirror	31.2	Luggage doors lock/unlock	33.1 - 33.2		
Diodes list	H	Engine ECU	14.1	Luggage cmpt. lighting	25.1		
Resistors list	J	Engine heater	14.1				
Relays list	K	Engine start	3.2	M			
Fuses list	L	Engine & RJB cmpt. Light	25.1	Main dist. ignition & batt.	3.1		
Wire identification chart	M	Entrance door light	29.1	Markers lights	26.1 - 26.2	T	
		ESP	16.1	Mirrors	31.1	Tag	32.1
A		Engine brake	12.1	Multiplex power distribution	7.1	Tail & licence lights	26.2
		F		Multiplex network	6.1 - 6.2	Tire pressure monitor	39.1
Air dryer	37.1	Fast idle	14.1			Trailer package	26.4
Alternators	1.1	Fans radiator	13.1			Trailer park brake	12.2
		Fire alarm	38.1	P		Transmission ECU	15.1
		Fire suppression system	38.1	Park brake sensor	12.1		
B		Flashers	26.1-26.2	Park brake trailer sensor	12.2	U	
Back-up warnings	26.3	Fog lights	26.5	Power distribution FJB 12V	4.1	Urea system	14.2
Batteries & Equalizer	1.1	Fuel gauge	10.1	Power distribution FJB 24V	4.2		
Brake pedal sensor	12.1			Pwr dist. RJB 12V & 24V	5.1		
		G		Power outlets 12V	30.2	V	
		Grounds electronic	2.1			Volvo link TGW	37.1
C		Grounds chassis	2.2				
Cigar lighter	30.2			R		W	
Clearance lights	26.1-26.2	H		Retarder	12.1 - 15.1	Windows ajar	27.1
Cluster	10.1	Hazard	26.1	RJB fan	1.1	Wipers & washer	34.1
Cornering lights	26.5	Head lights	26.1			Wheelchair Lift	36.1
Cruise control	14.1	Horn	9.1				
Converter interface	21.1	Hvac defroster	18.1				
Charging system	3.2	Hvac passenger full	18.2				
		Hvac passenger small	18.3				

Wiring diagram pages list

Wiring diagram pages		D		I		S	
Multiplex outputs list	**B1**	Dash backlighting	19.1	Ignition	3.2	Slide out front left	20.1
Multiplex inputs list	**B2**	Driver's lights	19.1			Slide out rear left	20.2
Multiplex error messages	**B3**	Driver window	30.1	**K**		Spares wires	8.1
Layout vehicule - harness	**C1**	Driver assist	16.2	Keyless entry system	29.1	Stop lights	26.2
Sound system	**C2**	Driver seat Electrical Option	30.3			Steering control ZF	37.2
Pins configuration	**D**	Docking lights	26.5	**L**		Steering multifunctions	41.1
Circuits list	**E**	**E**		Level low	32.1	Step lights	29.1
Circuit breakers list	**F**	ELD/ITS Gateway	42.4	Line departure warning	16.2	Sun visor	41.1
Connectors list	**G**	Electronics Mirror	31.2	Luggage doors lock/unlock	33.1 - 33.2		
Diodes list	**H**	Engine ECU	14.1	Luggage cmpt. lighting	25.1		
Resistors list	**J**	Engine heater	14.1				
Relays list	**K**	Engine start	3.2	**M**			
Fuses list	**L**	Engine & RJB cmpt. Light	25.1	Main dist. ignition & batt.	3.1		
Wire identification chart	**M**	Entrance door light	29.1	Markers lights	26.1 - 26.2	**T**	
		ESP	16.1	Mirrors	31.1	Tag	32.1
A		Engine brake	12.1	Multiplex power distribution	7.1	Tail & licence lights	26.2
		F		Multiplex network	6.1 - 6.2	Tire pressure monitor	39.1
Air dryer	37.1	Fast idle	14.1			Trailer package	26.4
Alternators	1.1	Fans radiator	13.1			Trailer park brake	12.2
		Fire alarm	38.1	**P**		Transmission ECU	15.1
		Fire suppression system	38.1	Park brake sensor	12.1		
B		Flashers	26.1-26.2	Park brake trailer sensor	12.2	**U**	
Back-up warnings	26.3	Fog lights	26.5	Power distribution FJB 12V	4.1	Urea system	14.2
Batteries & Equalizer	1.1	Fuel gauge	10.1	Power distribution FJB 24V	4.2		
Brake pedal sensor	12.1			Pwr dist. RJB 12V & 24V	5.1		
		G		Power outlets 12V	30.2	**V**	
		Grounds electronic	2.1			Volvo link TGW	37.1
C		Grounds chassis	2.2				
Cigar lighter	30.2			**R**		**W**	
Clearance lights	26.1-26.2	**H**		Retarder	12.1 - 15.1	Windows ajar	27.1
Cluster	10.1	Hazard	26.1	RJB fan	1.1	Wipers & washer	34.1
Cornering lights	26.5	Head lights	26.1			Wheelchair Lift	36.1
Cruise control	14.1	Horn	9.1				
Converter interface	21.1	Hvac defroster	18.1				
Charging system	3.2	Hvac passenger full	18.2				
		Hvac passenger small	18.3				

MULTIPLEX OUTPUT LIST

O_xx... = Physical Ouput Pin ; I_xx... = Physical Input Pin ; D_xx... = CAN Network Signal from the HVAC control Head ; B_xx.. = Multiplex system global Network Variable

Module.Pin#	Signal name		Page	Connected devices	Input involved		
.	O_AcCluSol				B_BatterySaver	.	
					B_EngineRun	.	
					B_LowVoltage	.	
					B_TstModHvac	.	
					B_TstModSAC	.	
					D_AmbTempMSB	.	
					D_DriverSetPts	.	
					D_HvacModSig	.	
					D_PassSetPts	.	
					I_DrvTempSe	A47.J2:11	
					I_FireExt1stAl	A36.JB:23	38.1
					I_FireExt2ndAlm	A36.JB:21	38.1
					I_FireSensorA36	A36.JB:5	38.1
					I_IgnKeySw	A36.JB:2	3.2
					I_SAcSuperHeatSe	A47.J2:9	
					I_SuperHeatSe	A54.J2:11	
A36.JA:10	O_CutOutRelGnd	Emergency CutOut Relay	3.2		B_EngineRun	.	
					I_EntDorLockSw	A41.J2:3	
					I_FireExt2ndAlm	A36.JB:21	38.1
					I_HazardSw	A36.JB:4	26.1
					I_IgnKeySw	A36.JB:2	3.2
					I_ParkBrSe	A36.JB:9	12.1
A36.JA:11	O_FireExtR36		9.1	R36:86	I_EntDorLockSw	A41.J2:3	
					I_FireExt1stAl	A36.JB:23	38.1
					I_FireExt2ndAlm	A36.JB:21	38.1
					I_FireSensorA36	A36.JB:5	38.1
					I_HazardSw	A36.JB:4	26.1
					I_HornSw	A56.J2:7	
					I_IgnKeySw	A36.JB:2	3.2
					I_KeylessDrUnl	A41.J2:9	
					I_KeylessIntru	A41.J2:6	
					I_KeylessLockAll	A41.J2:8	
					I_KeylessLuggUnl	A41.J2:7	
					I_KeylessPanic	A41.J2:5	
					I_LuggDoorSw	A43.J1:20	
A36.JA:15	O_WakeUp	WakeUp Relay	3.2		I_EntDorLockSw	A41.J2:3	
					I_FireExt2ndAlm	A36.JB:21	38.1
					I_HazardSw	A36.JB:4	26.1
					I_IgnKeySw	A36.JB:2	3.2
A36.JA:16	O_ConvWakeUp	Converter wake up signal	21.1		I_EntDorLockSw	A41.J2:3	
					I_FireExt2ndAlm	A36.JB:21	38.1
					I_HazardSw	A36.JB:4	26.1
					I_IgnKeySw	A36.JB:2	3.2

MULTIPLEX OUTPUT LIST

O_xx... = Physical Ouput Pin ; I_xx... = Physical Input Pin ; D_xx... = CAN Network Signal from the HVAC control Head ; B_xx.. = Multiplex system global Network Variable

Module.Pin#	Signal name		Page	Connected devices	Input involved		
A36.JA:17	O_CutOutRel	Emergency CutOut Relay	3.2	R21:1	I_EntDorLockSw	A41.J2:3	
					I_FireExt2ndAlm	A36.JB:21	38.1
					I_HazardSw	A36.JB:4	26.1
					I_IgnKeySw	A36.JB:2	3.2
A36.JA:18	O_CutOutRelRst	Emergency CutOut Relay	3.2	R21:4	B_BatterySaver	.	
					B_EngineRun	.	
					B_TstModHvac	.	
					I_EngDoorSe	A52.J2:6	
					I_EngStaRrSw	A52.J2:5	
					I_EntDorLockSw	A41.J2:3	
					I_FireExt2ndAlm	A36.JB:21	38.1
					I_FrEngStaSw	A36.JB:22	3.2
					I_HazardSw	A36.JB:4	26.1
					I_IgnKeySw	A36.JB:2	3.2
					I_StartEna1	A52.J1:20	
					I_StartEna2	A36.JB:1	3.2
A36.JA:25	O_BrkRedCompat	Brake Redundant Compatible	12.1	A81.JA:5	D_VipSteering2	.	
					I_BrakePedPri	A51.J1:21	
					I_BrakePedSec	A36.JB:13	12.1
					I_IgnKeySw	A36.JB:2	3.2
					I_LwWipIntSw	A55.J2:10	
					I_LwWshSw	A55.J2:11	
					I_RetdrSig	A50.J1:20	
A36.JB:29	O_UpWiperMot	Upper Wiper Motor			B_BatterySaver	.	
					B_EngineRun	.	
					I_UpWipIntSw	A55.J2:12	
					I_UpWipSw	A55.J2:13	
					I_UpWshSw	A55.J2:9	
A41.J1:1	O_EntDorStpLb	Entrance Door Step Light Bulb			I_EntDorLockSw	A41.J2:3	
					I_EntDorOpSe	A41.J2:2	
					I_FireExt2ndAlm	A36.JB:21	38.1
					I_HazardSw	A36.JB:4	26.1
					I_IgnKeySw	A36.JB:2	3.2
					I_KeylessDrUnl	A41.J2:9	
					I_KeylessLockAll	A41.J2:8	
					I_KeylessLuggUnl	A41.J2:7	
					I_LuggDoorSw	A43.J1:20	
A41.J1:10	O_ConvParkBrk	Converter park brake signal			I_ParkBrSe	A36.JB:9	12.1
A41.J1:16	O_JacobBrk2	Jacob Brake 2			D_VipSteering1	.	
					D_VipSteering2	.	
					I_A41_NormalMode	.	
					I_BrakePedSec	A36.JB:13	12.1
					I_IgnKeySw	A36.JB:2	3.2

MULTIPLEX OUTPUT LIST

O_xx... = Physical Ouput Pin ; I_xx... = Physical Input Pin ; D_xx... = CAN Network Signal from the HVAC control Head ; B_xx.. = Multiplex system global Network Variable

Module.Pin#	Signal name		Page	Connected devices	Input involved		
A41.J1:16	O_JacobBrk2	Jacob Brake 2			I_LwWipIntSw	A55.J2:10	
					I_LwWshSw	A55.J2:11	
					I_RetarderSel	A55.J2:6	
					I_RetdrSig	A50.J1:20	
A41.J1:19	O_JacobBrk1	Jacob Brake 1			D_VipSteering1	.	
					D_VipSteering2	.	
					I_A41_NormalMode	.	
					I_BrakePedSec	A36.JB:13	12.1
					I_IgnKeySw	A36.JB:2	3.2
					I_LwWipIntSw	A55.J2:10	
					I_LwWshSw	A55.J2:11	
					I_RetarderSel	A55.J2:6	
					I_RetdrSig	A50.J1:20	
A41.J1:3	O_DoorLockMo	Entrance door lock motor			I_EntDorLockSw	A41.J2:3	
					I_EntDorOpSe	A41.J2:2	
					I_FireExt2ndAlm	A36.JB:21	38.1
					I_HazardSw	A36.JB:4	26.1
					I_IgnKeySw	A36.JB:2	3.2
					I_KeylessDrUnl	A41.J2:9	
					I_KeylessLockAll	A41.J2:8	
					I_KeylessLuggUnl	A41.J2:7	
A41.J1:4	O_DoorUnlockMo	Entrance door unlock motor			I_EntDorLockSw	A41.J2:3	
					I_EntDorOpSe	A41.J2:2	
					I_FireExt2ndAlm	A36.JB:21	38.1
					I_HazardSw	A36.JB:4	26.1
					I_IgnKeySw	A36.JB:2	3.2
					I_KeylessDrUnl	A41.J2:9	
					I_KeylessLockAll	A41.J2:8	
					I_KeylessLuggUnl	A41.J2:7	
A41.J1:7	O_EntDorLtLed				B_BatterySaver	.	
					B_EngineRun	.	
					I_DrvLtSw	A55.J2:1	
					I_EntDorLockSw	A41.J2:3	
					I_EntDorOpSe	A41.J2:2	
					I_FireExt2ndAlm	A36.JB:21	38.1
					I_HazardSw	A36.JB:4	26.1
					I_IgnKeySw	A36.JB:2	3.2
					I_KeylessDrUnl	A41.J2:9	
					I_KeylessLockAll	A41.J2:8	
					I_KeylessLuggUnl	A41.J2:7	
					I_LuggDoorSw	A43.J1:20	
A41.J2:15	O_EntDorUpperPe	Entrance Door Upper Pen			I_ParkBrSe	A36.JB:9	12.1
A42.J1:3	O_ConvIgnition	Converter ignition signal			I_IgnKeySw	A36.JB:2	3.2

MULTIPLEX OUTPUT LIST

O_xx... = Physical Ouput Pin ; I_xx... = Physical Input Pin ; D_xx... = CAN Network Signal from the HVAC control Head ; B_xx.. = Multiplex system global Network Variable

Module.Pin#	Signal name		Page	Connected devices	Input involved		
A42.J1:4	O_ConvEngRun	Converter engine run signal			B_EngineRun	.	
A43.J1:1	O_LugLkSol	Luggage Lock Solenoid			I_EntDorLockSw	A41.J2:3	
					I_FireExt2ndAlm	A36.JB:21	38.1
					I_HazardSw	A36.JB:4	26.1
					I_IgnKeySw	A36.JB:2	3.2
					I_KeylessDrUnl	A41.J2:9	
					I_KeylessLockAll	A41.J2:8	
					I_KeylessLuggUnl	A41.J2:7	
					I_LuggDoorSw	A43.J1:20	
A43.J1:13	O_EntDorULatRly				I_EntDorLockSw	A41.J2:3	
					I_FireExt2ndAlm	A36.JB:21	38.1
					I_HazardSw	A36.JB:4	26.1
					I_IgnKeySw	A36.JB:2	3.2
					I_KeylessDrUnl	A41.J2:9	
					I_KeylessLockAll	A41.J2:8	
					I_KeylessLuggUnl	A41.J2:7	
A43.J1:3	O_LugULkSol	Luggage Lock Solenoid			I_EntDorLockSw	A41.J2:3	
					I_FireExt2ndAlm	A36.JB:21	38.1
					I_HazardSw	A36.JB:4	26.1
					I_IgnKeySw	A36.JB:2	3.2
					I_KeylessDrUnl	A41.J2:9	
					I_KeylessLockAll	A41.J2:8	
					I_KeylessLuggUnl	A41.J2:7	
					I_LuggDoorSw	A43.J1:20	
A43.J1:7	O_TPMSEcu				I_IgnKeySw	A36.JB:2	3.2
A43.J2:1	O_LugLkSol2				I_EntDorLockSw	A41.J2:3	
					I_FireExt2ndAlm	A36.JB:21	38.1
					I_HazardSw	A36.JB:4	26.1
					I_IgnKeySw	A36.JB:2	3.2
					I_KeylessDrUnl	A41.J2:9	
					I_KeylessLockAll	A41.J2:8	
					I_KeylessLuggUnl	A41.J2:7	
					I_LuggDoorSw	A43.J1:20	
A43.J2:10	O_CruCtrlRsm	Cruise Control Resume Volvo			D_VipSteering1	.	
					I_A43_NormalMode	.	
					I_LwWipIntSw	A55.J2:10	
					I_LwWshSw	A55.J2:11	
A43.J2:4	O_LugULkSol2				I_EntDorLockSw	A41.J2:3	
					I_FireExt2ndAlm	A36.JB:21	38.1
					I_HazardSw	A36.JB:4	26.1
					I_IgnKeySw	A36.JB:2	3.2
					I_KeylessDrUnl	A41.J2:9	
					I_KeylessLockAll	A41.J2:8	

MULTIPLEX OUTPUT LIST

O_xx... = Physical Ouput Pin ; I_xx... = Physical Input Pin ; D_xx... = CAN Network Signal from the HVAC control Head ; B_xx.. = Multiplex system global Network Variable

Module.Pin#	Signal name		Page	Connected devices	Input involved		
A43.J2:4	O_LugULkSol2				I_KeylessLuggUnl	A41.J2:7	
					I_LuggDoorSw	A43.J1:20	
A43.J2:7	O_CruCtrlSet	Cruise Control Set Volvo			D_VipSteering1	.	
					I_A43_NormalMode	.	
					I_LwWipIntSw	A55.J2:10	
					I_LwWshSw	A55.J2:11	
A44.J1:10	O_HeadLmpWshMo				I_HeadLmpWshSw	A56.J1:2	
					I_IgnKeySw	A36.JB:2	3.2
A44.J1:13	O_KeylessPwr				I_IgnKeySw	A36.JB:2	3.2
					I_LuggDoorSw	A43.J1:20	
A44.J1:16	O_HornSol	Electric Horn			I_HornSw	A56.J2:7	
					I_IgnKeySw	A36.JB:2	3.2
A44.J1:19	O_UdrFlrLed	Under Floor Light led			B_BatterySaver	.	
					B_EngineRun	.	
					I_AccKeySw	A36.JB:6	3.2
					I_IgnKeySw	A36.JB:2	3.2
A44.J1:3	O_UpWshPmp	Upper Wiper Washer Pump			B_BatterySaver	.	
					B_EngineRun	.	
					I_UpWshSw	A55.J2:9	
A44.J1:4	O_ShutDownRly				B_EngineRun	.	
					I_A44_NormalMode	.	
					I_FireExt2ndAlm	A36.JB:21	38.1
					I_IgnKeySw	A36.JB:2	3.2
					I_StartEna1	A52.J1:20	
					I_StartEna2	A36.JB:1	3.2
A44.J1:7	O_LwWshPmp	Lower Wiper Washer Pump			I_IgnKeySw	A36.JB:2	3.2
					I_LwWshSw	A55.J2:11	
A44.J2:1	O_SunVisorPsPMO				D_VipSteering1	.	
					D_VipSteering2	.	
					I_A44_NormalMode	.	
					I_IgnKeySw	A36.JB:2	3.2
					I_SunVisorDrv	A44.J2:5	
					I_SunVisorPass	A44.J2:6	
A44.J2:10	O_SunVisorDrPMO				D_VipSteering1	.	
					D_VipSteering2	.	
					I_A44_NormalMode	.	
					I_IgnKeySw	A36.JB:2	3.2
					I_SunVisorDrv	A44.J2:5	
					I_SunVisorPass	A44.J2:6	
A44.J2:13	O_SunVisorDrNMO				D_VipSteering1	.	
					D_VipSteering2	.	
					I_A44_NormalMode	.	
					I_IgnKeySw	A36.JB:2	3.2

MULTIPLEX OUTPUT LIST

O_xx... = Physical Ouput Pin ; I_xx... = Physical Input Pin ; D_xx... = CAN Network Signal from the HVAC control Head ; B_xx.. = Multiplex system global Network Variable

Module.Pin#	Signal name		Page	Connected devices	Input involved		
A44.J2:13	O_SunVisorDrNMO				I_SunVisorDrv	A44.J2:5	
					I_SunVisorPass	A44.J2:6	
A44.J2:4	O_SunVisorPsNMO				D_VipSteering1	.	
					D_VipSteering2	.	
					I_A44_NormalMode	.	
					I_IgnKeySw	A36.JB:2	3.2
					I_SunVisorDrv	A44.J2:5	
					I_SunVisorPass	A44.J2:6	
A44.J2:7	O_DriverLtLed				B_BatterySaver	.	
					B_EngineRun	.	
					I_DrvLtSw	A55.J2:1	
A45.J1:1	O_DashTrapPMo	Dash Trap Motor			D_HvacModSig	.	
					D_HvacModSig1	.	
					I_IgnKeySw	A36.JB:2	3.2
A45.J1:16	O_Mirrors				I_IgnKeySw	A36.JB:2	3.2
A45.J1:3	O_DashTrapNMo	Dash Trap Motor Return			D_HvacModSig	.	
					D_HvacModSig1	.	
					I_IgnKeySw	A36.JB:2	3.2
A45.J1:4	O_VarSteeringPwr				I_IgnKeySw	A36.JB:2	3.2
A45.J2:1	O_FootTrpPSol	Foot Trap Solenoid			D_HvacModSig	.	
					D_HvacModSig1	.	
					I_IgnKeySw	A36.JB:2	3.2
A45.J2:13	O_WdowDrvDwMo	Window driver up motor			I_IgnKeySw	A36.JB:2	3.2
					I_WdowDrvSw	A56.J2:9	
A45.J2:4	O_FootTrpNSol	Foot Trap Solenoid			D_HvacModSig	.	
					D_HvacModSig1	.	
					I_IgnKeySw	A36.JB:2	3.2
A45.J2:7	O_WdowDrvUpMo	Window driver up motor			I_IgnKeySw	A36.JB:2	3.2
					I_WdowDrvSw	A56.J2:9	
A46.J1:1	O_LHFogLb1	Left Hand Fog Light Bulb			B_BatterySaver	.	
					B_EngineRun	.	
					B_TstModExtLight	.	
					I_BatMonMod46	A46.J1:24	
					I_FogLightSw	A56.J2:5	
					I_HdLtHiLowBmSw	A56.J1:21	
					I_HdLtPos2Sw	A56.J1:5	
					I_HiBeamCallSw	A56.J1:20	
A46.J1:10	O_FrClearLb	Front Clearance Lights Bulb			B_BatterySaver	.	
					B_EngineRun	.	
					B_TstModExtLight	.	
					I_FogLightSw	A56.J2:5	
					I_HdLtPos1Sw	A56.J1:17	
					I_HdLtPos2Sw	A56.J1:5	

MULTIPLEX OUTPUT LIST

O_xx... = Physical Ouput Pin ; I_xx... = Physical Input Pin ; D_xx... = CAN Network Signal from the HVAC control Head ; B_xx.. = Multiplex system global Network Variable

Module.Pin#	Signal name		Page	Connected devices	Input involved		
A46.J1:13	O_LHFrMkrLb	Left Hand Front Markers Light Bulb			B_BatterySaver	.	
					B_EngineRun	.	
					B_TstModExtLight	.	
					I_EntDorLockSw	A41.J2:3	
					I_FireExt2ndAlm	A36.JB:21	38.1
					I_FogLightSw	A56.J2:5	
					I_HazardSw	A36.JB:4	26.1
					I_HdLtPos1Sw	A56.J1:17	
					I_HdLtPos2Sw	A56.J1:5	
					I_IgnKeySw	A36.JB:2	3.2
					I_KeylessDrUnl	A41.J2:9	
					I_KeylessIntru	A41.J2:6	
					I_KeylessLockAll	A41.J2:8	
					I_KeylessLuggUnl	A41.J2:7	
					I_KeylessPanic	A41.J2:5	
A46.J1:19	O_AuxSolValve	Auxiliary refrigerant solenoid valve			B_EngineRun	.	
					B_LowVoltage	.	
					D_AmbTempLSB	.	
					D_AmbTempMSB	.	
					D_DriverSetPts	.	
					D_HvacModSig	.	
					D_PassSetPts	.	
					I_DrvTempSe	A47.J2:11	
					I_FireExt1stAl	A36.JB:23	38.1
					I_FireExt2ndAlm	A36.JB:21	38.1
					I_FireSensorA36	A36.JB:5	38.1
					I_IgnKeySw	A36.JB:2	3.2
A46.J2:1	O_LHCornerLb	Left Hand Cornering Light Bulb			B_BatterySaver	.	
					B_EngineRun	.	
					B_TstModExtLight	.	
					I_CorneringLtSw	A56.J2:6	
					I_DockingLtSw	A56.J2:10	
					I_LHFlshSw	A46.J1:20	
					I_LowDockLtsSw	A55.J2:7	
A46.J2:10	O_AuxFanSpeed	Auxiliary fan speed control			B_BatterySaver	.	
					B_EngineRun	.	
					B_OneAltCharging	.	
					I_BatMonMod46	A46.J1:24	
A46.J2:13	O_LHFrSidFlshLb				B_BatterySaver	.	
					B_EngineRun	.	
					B_TstModExtLight	.	
					I_HazardSw	A36.JB:4	26.1
					I_IgnKeySw	A36.JB:2	3.2

MULTIPLEX OUTPUT LIST

O_xx... = Physical Ouput Pin ; I_xx... = Physical Input Pin ; D_xx... = CAN Network Signal from the HVAC control Head ; B_xx.. = Multiplex system global Network Variable

Module.Pin#	Signal name		Page	Connected devices	Input involved		
A46.J2:13	O_LHFrSidFlshLb				I_LHFlshSw	A46.J1:20	
					I_LHFlshSwRrSig	A51.J1:20	
					I_RHFlshSw	A48.J2:5	
					I_RHFlshSwRrSig	A51.J2:5	
A46.J2:4	O_LHHiBmLb	Left Hand Hi Beam Light Bulb			B_BatterySaver	.	
					B_EngineRun	.	
					B_TstModExtLight	.	
					I_BatMonMod46	A46.J1:24	
					I_HdLtHiLowBmSw	A56.J1:21	
					I_HdLtPos2Sw	A56.J1:5	
					I_HiBeamCallSw	A56.J1:20	
					I_ParkBrSe	A36.JB:9	12.1
A46.J2:7	O_LHLwBmLb	Left Hand Low Beam Light Bulb			B_BatterySaver	.	
					B_EngineRun	.	
					B_TstModExtLight	.	
					I_BatMonMod46	A46.J1:24	
					I_HdLtHiLowBmSw	A56.J1:21	
					I_HdLtPos2Sw	A56.J1:5	
					I_HiBeamCallSw	A56.J1:20	
A47.J1:1	O_DrvRfgSol	Driver refrigerent solenoid			B_BatterySaver	.	
					B_EngineRun	.	
					B_LowVoltage	.	
					B_TstModHvac	.	
					B_TstModSAC	.	
					D_AmbTempLSB	.	
					D_AmbTempMSB	.	
					D_DriverSetPts	.	
					D_HvacModSig	.	
					D_PassSetPts	.	
					I_BatMonMod47	A47.J1:24	
					I_DrvTempSe	A47.J2:11	
					I_FireExt1stAl	A36.JB:23	38.1
					I_FireExt2ndAlm	A36.JB:21	38.1
					I_FireSensorA36	A36.JB:5	38.1
					I_IgnKeySw	A36.JB:2	3.2
A47.J1:16	O_AuxWaterPump	Auxiliary water pump			B_BatterySaver	.	
					B_EngineRun	.	
					B_TstModSAC	.	
					D_AmbTempLSB	.	
					D_AmbTempMSB	.	
					D_HvacModSig	.	
					I_DefrostHighSw	A47.J1:21	
					I_DefrostLowSw	A47.J2:6	

MULTIPLEX OUTPUT LIST

O_xx... = Physical Ouput Pin ; I_xx... = Physical Input Pin ; D_xx... = CAN Network Signal from the HVAC control Head ; B_xx.. = Multiplex system global Network Variable

Module.Pin#	Signal name		Page	Connected devices	Input involved		
A47.J1:3	O_DrvHeatSol	Driver Heat Solenoid			B_BatterySaver	.	
					B_EngineRun	.	
					B_TstModHvac	.	
					B_TstModSAC	.	
					D_DriverSetPts	.	
					D_HvacModSig	.	
					D_HvacModSig1	.	
					I_BatMonMod47	A47.J1:24	
A47.J1:4	O_DrvRecTrap	Driver Recycle Trap			B_BatterySaver	.	
					B_EngineRun	.	
					B_TstModHvac	.	
					B_TstModSAC	.	
					D_HvacModSig	.	
					I_IgnKeySw	A36.JB:2	3.2
A47.J1:7	O_LwWipSpd1	Lower Wiper Speed 1			I_IgnKeySw	A36.JB:2	3.2
					I_LwWipIntSw	A55.J2:10	
					I_LwWshSw	A55.J2:11	
A47.J2:1	O_DrvDefFanMo	Driver Defroster Fan Motor			B_BatterySaver	.	
					B_EngineRun	.	
					D_HvacModSig	.	
					I_BatMonMod47	A47.J1:24	
A47.J2:4	O_RHDefrostFan	Passenger defrost fan speed control			B_BatterySaver	.	
					B_EngineRun	.	
					D_HvacModSig	.	
					I_BatMonMod47	A47.J1:24	
					I_DefrostHighSw	A47.J1:21	
					I_DefrostLowSw	A47.J2:6	
A48.J1:1	O_RHFogLb1	Right Hand Fog Light			B_BatterySaver	.	
					B_EngineRun	.	
					B_TstModExtLight	.	
					I_BatMonMod48	A48.J1:24	
					I_FogLightSw	A56.J2:5	
					I_HdLtHiLowBmSw	A56.J1:21	
					I_HdLtPos2Sw	A56.J1:5	
					I_HiBeamCallSw	A56.J1:20	
A48.J1:10	O_RHFrMrkLb	Right Hand Front Markers Light Bulb			B_BatterySaver	.	
					B_EngineRun	.	
					B_TstModExtLight	.	
					I_EntDorLockSw	A41.J2:3	
					I_FireExt2ndAlm	A36.JB:21	38.1
					I_FogLightSw	A56.J2:5	
					I_HazardSw	A36.JB:4	26.1
					I_HdLtPos1Sw	A56.J1:17	

MULTIPLEX OUTPUT LIST

O_xx... = Physical Ouput Pin ; I_xx... = Physical Input Pin ; D_xx... = CAN Network Signal from the HVAC control Head ; B_xx.. = Multiplex system global Network Variable

Module.Pin#	Signal name		Page	Connected devices	Input involved		
A48.J1:10	O_RHFrMrkLb	Right Hand Front Markers Light Bulb			I_HdLtPos2Sw	A56.J1:5	
					I_IgnKeySw	A36.JB:2	3.2
					I_KeylessDrUnl	A41.J2:9	
					I_KeylessIntru	A41.J2:6	
					I_KeylessLockAll	A41.J2:8	
					I_KeylessLuggUnl	A41.J2:7	
					I_KeylessPanic	A41.J2:5	
A48.J1:3	O_RHCornerLb	Right Hand Cornering Light Bulb			B_BatterySaver	.	
					B_EngineRun	.	
					B_TstModExtLight	.	
					I_CorneringLtSw	A56.J2:6	
					I_DockingLtSw	A56.J2:10	
					I_LowDockLtsSw	A55.J2:7	
					I_RHFlshSw	A48.J2:5	
A48.J2:1	O_RHHiBeamLb	Right Hand Hi Beam Light Bulb			B_BatterySaver	.	
					B_EngineRun	.	
					B_TstModExtLight	.	
					I_BatMonMod48	A48.J1:24	
					I_HdLtHiLowBmSw	A56.J1:21	
					I_HdLtPos2Sw	A56.J1:5	
					I_HiBeamCallSw	A56.J1:20	
					I_ParkBrSe	A36.JB:9	12.1
A48.J2:10	O_EntDoorWdoDown	Entrance Door Wdo Down			I_EntDorWdo	A56.J2:13	
					I_IgnKeySw	A36.JB:2	3.2
A48.J2:13	O_RHFrSidFlshLb	RH Front Side Flasher L-Bulb			B_BatterySaver	.	
					B_EngineRun	.	
					B_TstModExtLight	.	
					I_HazardSw	A36.JB:4	26.1
					I_IgnKeySw	A36.JB:2	3.2
					I_LHFlshSwRrSig	A51.J1:20	
					I_RHFlshSw	A48.J2:5	
					I_RHFlshSwRrSig	A51.J2:5	
A48.J2:4	O_RHLwBeamLb	Right Hand Low Beam Light Bulb			B_BatterySaver	.	
					B_EngineRun	.	
					B_TstModExtLight	.	
					I_BatMonMod48	A48.J1:24	
					I_HdLtHiLowBmSw	A56.J1:21	
					I_HdLtPos2Sw	A56.J1:5	
					I_HiBeamCallSw	A56.J1:20	
A48.J2:7	O_EntDoorWdoUp	Entrance Door Wdo Up			I_EntDorWdo	A56.J2:13	
					I_IgnKeySw	A36.JB:2	3.2
A49.J1:1	O_FanDrvCool357				B_BatterySaver	.	
					B_EngineRun	.	

MULTIPLEX OUTPUT LIST

O_xx... = Physical Ouput Pin ; I_xx... = Physical Input Pin ; D_xx... = CAN Network Signal from the HVAC control Head ; B_xx.. = Multiplex system global Network Variable

Module.Pin#	Signal name		Page	Connected devices	Input involved		
A49.J1:1	O_FanDrvCool357				B_TstModHvac	.	
					B_TstModSAC	.	
					D_AmbTempLSB	.	
					D_AmbTempMSB	.	
					I_AltSeLL	A52.J2:8	
					I_AltSeUL	A49.J1:20	
					I_AltSeUR	A52.J2:9	
					I_BatMonMod49	A49.J1:24	
					I_BatMonMod52	A52.J1:24	
					I_FireExt1stAl	A36.JB:23	38.1
					I_IgnKeySw	A36.JB:2	3.2
					I_RetdrSig	A50.J1:20	
A49.J1:3	O_FanDrvCac1				B_BatterySaver	.	
					B_EngineRun	.	
					B_TstModHvac	.	
					B_TstModSAC	.	
					D_AmbTempLSB	.	
					D_AmbTempMSB	.	
					D_IndexByte	.	
					I_AltSeLL	A52.J2:8	
					I_AltSeUL	A49.J1:20	
					I_AltSeUR	A52.J2:9	
					I_BatMonMod49	A49.J1:24	
					I_BatMonMod52	A52.J1:24	
					I_FireExt1stAl	A36.JB:23	38.1
					I_IgnKeySw	A36.JB:2	3.2
A49.J2:1	O_AltChrCtrUL				B_BatterySaver	.	
					B_EngineRun	.	
					B_TstModHvac	.	
					B_TstModSAC	.	
					D_AmbTempLSB	.	
					D_AmbTempMSB	.	
					D_HvacModSig2	.	
					D_IndexByte	.	
					I_AltSeLL	A52.J2:8	
					I_AltSeUL	A49.J1:20	
					I_AltSeUR	A52.J2:9	
					I_BatMonMod54	A54.J1:24	
					I_IgnKeySw	A36.JB:2	3.2
					I_ParkBrSe	A36.JB:9	12.1
					I_RetdrSig	A50.J1:20	
					I_StartEna1	A52.J1:20	
					I_StartEna2	A36.JB:1	3.2

MULTIPLEX OUTPUT LIST

O_xx... = Physical Ouput Pin ; I_xx... = Physical Input Pin ; D_xx... = CAN Network Signal from the HVAC control Head ; B_xx.. = Multiplex system global Network Variable

Module.Pin#	Signal name		Page	Connected devices	Input involved		
A49.J2:13	O_RetardEna	Retarder Enable			D_VipSteering1	.	
					D_VipSteering2	.	
					I_BrakePedSec	A36.JB:13	12.1
					I_IgnKeySw	A36.JB:2	3.2
					I_LwWipIntSw	A55.J2:10	
					I_LwWshSw	A55.J2:11	
					I_RetarderSel	A55.J2:6	
					I_RetdrSig	A50.J1:20	
A49.J2:4	O_CondSpdVariSAc				B_BatterySaver	.	
					B_EngineRun	.	
					B_TstModSAC	.	
					I_BatMonMod49	A49.J1:24	
A50.J1:10	O_BackUpCam	Back up camera			I_BackUpCamSw	A55.J2:8	
A50.J1:13	O_LHCtrFlshLb	Water Filter Indicator Warning			B_BatterySaver	.	
					B_EngineRun	.	
					B_TstModExtLight	.	
					I_HazardSw	A36.JB:4	26.1
					I_IgnKeySw	A36.JB:2	3.2
					I_LHFlshSwRrSig	A51.J1:20	
					I_RHFlshSwRrSig	A51.J2:5	
A50.J1:19	O_RHCtrFlshLb	Wheel Chair Lift Warning Indicator			B_BatterySaver	.	
					B_EngineRun	.	
					B_TstModExtLight	.	
					I_HazardSw	A36.JB:4	26.1
					I_IgnKeySw	A36.JB:2	3.2
					I_LHFlshSwRrSig	A51.J1:20	
					I_RHFlshSwRrSig	A51.J2:5	
A50.J1:4	O_AirDryer				I_IgnKeySw	A36.JB:2	3.2
A50.J1:7	O_RevAlarm	Back up alarm			B_BatterySaver	.	
					B_EngineRun	.	
					B_TestSwBuz2	.	
					B_TestSwBuzzer	.	
					B_TstModExtLight	.	
					B_TstModHvac	.	
					B_TstModHvacNext	.	
					B_TstModSAC	.	
					B_TstModSACNext	.	
					B_TstSwBuz3	.	
					D_NextWheel	.	
					I_RevAlrmSw	A55.J2:4	
A50.J2:1	O_BrLTLowerLed				B_BatterySaver	.	
					B_EngineRun	.	
					B_TstModExtLight	.	

MULTIPLEX OUTPUT LIST

O_xx... = Physical Ouput Pin ; I_xx... = Physical Input Pin ; D_xx... = CAN Network Signal from the HVAC control Head ; B_xx.. = Multiplex system global Network Variable

Module.Pin#	Signal name		Page	Connected devices	Input involved		
A50.J2:1	O_BrLTLowerLed				I_BrakePedPri	A51.J1:21	
					I_BrakePedSec	A36.JB:13	12.1
					I_IgnKeySw	A36.JB:2	3.2
					I_ParkBrSe	A36.JB:9	12.1
					I_RetdrSig	A50.J1:20	
A50.J2:10	O_BackUpLt				B_BatterySaver	.	
					B_EngineRun	.	
					B_TstModExtLight	.	
					B_TstModHvac	.	
					B_TstModHvacNext	.	
					B_TstModSAC	.	
					B_TstModSACNext	.	
A50.J2:7	O_CtrSdMrkLb	Tag Axle Warning Indicator			B_BatterySaver	.	
					B_EngineRun	.	
					B_TstModExtLight	.	
					I_FogLightSw	A56.J2:5	
					I_HdLtPos1Sw	A56.J1:17	
					I_HdLtPos2Sw	A56.J1:5	
A51.J1:1	O_LHDockLb	Left Hand Docking Light Bulb			B_BatterySaver	.	
					B_EngineRun	.	
					B_TstModExtLight	.	
					I_DockingLtSw	A56.J2:10	
					I_LowDockLtsSw	A55.J2:7	
A51.J1:13	O_LHReFlshLb	Left Hand Rear Flasher Light Bulb			B_BatterySaver	.	
					B_EngineRun	.	
					B_TstModExtLight	.	
					I_HazardSw	A36.JB:4	26.1
					I_IgnKeySw	A36.JB:2	3.2
					I_LHFlshSwRrSig	A51.J1:20	
					I_RHFlshSwRrSig	A51.J2:5	
A51.J1:16	O_SerBrkTrans	Servise Brake Signal For Transmission			I_BrakePedSec	A36.JB:13	12.1
A51.J1:3	O_RHDockLb	Right Hand Docking Light Bulb			B_BatterySaver	.	
					B_EngineRun	.	
					B_TstModExtLight	.	
					I_DockingLtSw	A56.J2:10	
					I_LowDockLtsSw	A55.J2:7	
A51.J1:4	O_RHReFlshLb	Right Hand Rear Flasher Light Bulb			B_BatterySaver	.	
					B_EngineRun	.	
					B_TstModExtLight	.	
					I_HazardSw	A36.JB:4	26.1
					I_IgnKeySw	A36.JB:2	3.2
					I_LHFlshSwRrSig	A51.J1:20	
					I_RHFlshSwRrSig	A51.J2:5	

MULTIPLEX OUTPUT LIST

O_xx... = Physical Ouput Pin ; I_xx... = Physical Input Pin ; D_xx... = CAN Network Signal from the HVAC control Head ; B_xx.. = Multiplex system global Network Variable

Module.Pin#	Signal name		Page	Connected devices	Input involved		
A51.J1:7	O_CyclopeLt	Cyclope Brake Light			B_BatterySaver	.	
					B_EngineRun	.	
					B_TstModExtLight	.	
					I_BrakePedPri	A51.J1:21	
					I_BrakePedSec	A36.JB:13	12.1
					I_IgnKeySw	A36.JB:2	3.2
					I_ParkBrSe	A36.JB:9	12.1
A51.J2:1	O_CyclopeRH				B_BatterySaver	.	
					B_EngineRun	.	
					B_TstModExtLight	.	
					I_FogLightSw	A56.J2:5	
					I_HazardSw	A36.JB:4	26.1
					I_HdLtPos1Sw	A56.J1:17	
					I_HdLtPos2Sw	A56.J1:5	
					I_IgnKeySw	A36.JB:2	3.2
					I_LHFlshSwRrSig	A51.J1:20	
					I_RHFlshSwRrSig	A51.J2:5	
A51.J2:10	O_CyclopeLH				B_BatterySaver	.	
					B_EngineRun	.	
					B_TstModExtLight	.	
					I_FogLightSw	A56.J2:5	
					I_HazardSw	A36.JB:4	26.1
					I_HdLtPos1Sw	A56.J1:17	
					I_HdLtPos2Sw	A56.J1:5	
					I_IgnKeySw	A36.JB:2	3.2
					I_LHFlshSwRrSig	A51.J1:20	
					I_RHFlshSwRrSig	A51.J2:5	
A51.J2:4	O_TransInhibit	Transmission Inhibit			I_BatMonMod61	A61.J1:24	
					I_BrakePedPri	A51.J1:21	
					I_BrakePedSec	A36.JB:13	12.1
					I_FFlr4FrLimSw	A61.J2:8	
					I_FFlr4RrLimSw	A61.J2:9	
					I_IgnKeySw	A36.JB:2	3.2
					I_Sld4PosFFMoFr	A61.J2:11	
					I_Sld4PosFFMoRr	A61.J2:12	
A51.J2:7	O_BrLTUpperLed				B_BatterySaver	.	
					B_EngineRun	.	
					B_TstModExtLight	.	
					I_BrakePedPri	A51.J1:21	
					I_BrakePedSec	A36.JB:13	12.1
					I_IgnKeySw	A36.JB:2	3.2
					I_ParkBrSe	A36.JB:9	12.1
					I_RetdrSig	A50.J1:20	

MULTIPLEX OUTPUT LIST

O_xx... = Physical Ouput Pin ; I_xx... = Physical Input Pin ; D_xx... = CAN Network Signal from the HVAC control Head ; B_xx.. = Multiplex system global Network Variable

Module.Pin#	Signal name		Page	Connected devices	Input involved		
A52.J1:1	O_FnDrvCac2				B_BatterySaver	.	
					B_EngineRun	.	
					B_TstModHvac	.	
					B_TstModSAC	.	
					D_AmbTempLSB	.	
					D_AmbTempMSB	.	
					D_IndexByte	.	
					I_AltSeLL	A52.J2:8	
					I_AltSeUR	A52.J2:9	
					I_BatMonMod52	A52.J1:24	
					I_FireExt1stAl	A36.JB:23	38.1
					I_IgnKeySw	A36.JB:2	3.2
A52.J1:10	O_StarterRel	Starter Relay			B_BatterySaver	.	
					B_EngineRun	.	
					B_TstModHvac	.	
					I_EngDoorSe	A52.J2:6	
					I_EngStaRrSw	A52.J2:5	
					I_FireExt2ndAlm	A36.JB:21	38.1
					I_FrEngStaSw	A36.JB:22	3.2
					I_IgnKeySw	A36.JB:2	3.2
					I_StartEna1	A52.J1:20	
					I_StartEna2	A36.JB:1	3.2
A52.J1:13	O_FanRJB	Fan RJB			B_BatterySaver	.	
					B_EngineRun	.	
					B_TstModSAC	.	
					D_AmbTempLSB	.	
					D_AmbTempMSB	.	
					I_FireExt1stAl	A36.JB:23	38.1
					I_FireExt2ndAlm	A36.JB:21	38.1
					I_FireSensorA36	A36.JB:5	38.1
					I_IgnKeySw	A36.JB:2	3.2
A52.J1:3	O_FanDrvCool468				B_BatterySaver	.	
					B_EngineRun	.	
					B_TstModHvac	.	
					B_TstModSAC	.	
					D_AmbTempLSB	.	
					D_AmbTempMSB	.	
					I_AltSeLL	A52.J2:8	
					I_AltSeUR	A52.J2:9	
					I_BatMonMod52	A52.J1:24	
					I_FireExt1stAl	A36.JB:23	38.1
					I_IgnKeySw	A36.JB:2	3.2
					I_RetdrSig	A50.J1:20	

MULTIPLEX OUTPUT LIST

O_xx... = Physical Ouput Pin ; I_xx... = Physical Input Pin ; D_xx... = CAN Network Signal from the HVAC control Head ; B_xx.. = Multiplex system global Network Variable

Module.Pin#	Signal name		Page	Connected devices	Input involved		
A52.J1:7	O_EngCmptLb	Engine Compartiment			I_EngDoorSe	A52.J2:6	
A52.J2:1	O_AltChrCtrLL				B_BatterySaver	.	
					B_EngineRun	.	
					B_TstModHvac	.	
					B_TstModSAC	.	
					D_AmbTempLSB	.	
					D_AmbTempMSB	.	
					D_HvacModSig2	.	
					D_IndexByte	.	
					I_AltSeLL	A52.J2:8	
					I_AltSeUL	A49.J1:20	
					I_AltSeUR	A52.J2:9	
					I_BatMonMod54	A54.J1:24	
					I_IgnKeySw	A36.JB:2	3.2
					I_ParkBrSe	A36.JB:9	12.1
					I_RetdrSig	A50.J1:20	
					I_StartEna1	A52.J1:20	
					I_StartEna2	A36.JB:1	3.2
A52.J2:4	O_AltChrCtrUR				B_BatterySaver	.	
					B_EngineRun	.	
					B_TstModHvac	.	
					B_TstModSAC	.	
					D_AmbTempLSB	.	
					D_AmbTempMSB	.	
					D_HvacModSig2	.	
					D_IndexByte	.	
					I_AltSeLL	A52.J2:8	
					I_AltSeUL	A49.J1:20	
					I_AltSeUR	A52.J2:9	
					I_BatMonMod54	A54.J1:24	
					I_IgnKeySw	A36.JB:2	3.2
					I_ParkBrSe	A36.JB:9	12.1
					I_RetdrSig	A50.J1:20	
					I_StartEna1	A52.J1:20	
					I_StartEna2	A36.JB:1	3.2
A54.J1:1	O_EvaSpd2Pilot	Evaporator Fan Speed 2			B_BatterySaver	.	
					B_EngineRun	.	
					B_LowVoltage	.	
					B_TstModHvac	.	
					D_AmbTempLSB	.	
					D_AmbTempMSB	.	
					D_HvacModSig	.	
					D_PassSetPts	.	

MULTIPLEX OUTPUT LIST

O_xx... = Physical Ouput Pin ; I_xx... = Physical Input Pin ; D_xx... = CAN Network Signal from the HVAC control Head ; B_xx.. = Multiplex system global Network Variable

Module.Pin#	Signal name		Page	Connected devices	Input involved		
A54.J1:1	O_EvaSpd2Pilot	Evaporator Fan Speed 2			I_BatMonMod54	A54.J1:24	
					I_FireExt1stAl	A36.JB:23	38.1
					I_FireExt2ndAlm	A36.JB:21	38.1
					I_FireSensorA36	A36.JB:5	38.1
					I_IgnKeySw	A36.JB:2	3.2
A54.J1:10	O_ACWaterPmp	Hvac Water Pump			B_BatterySaver	.	
					B_EngineRun	.	
					B_TstModHvac	.	
					D_AmbTempLSB	.	
					D_AmbTempMSB	.	
					D_HvacModSig	.	
					I_BatMonMod54	A54.J1:24	
					I_FireExt1stAl	A36.JB:23	38.1
					I_FireExt2ndAlm	A36.JB:21	38.1
					I_FireSensorA36	A36.JB:5	38.1
					I_IgnKeySw	A36.JB:2	3.2
A54.J1:19	O_EvaSpd1Rel	Evaporator Fan Speed 1 Relay			B_BatterySaver	.	
					B_EngineRun	.	
					B_LowVoltage	.	
					B_TstModHvac	.	
					D_HvacModSig	.	
					I_BatMonMod54	A54.J1:24	
					I_FireExt1stAl	A36.JB:23	38.1
					I_FireExt2ndAlm	A36.JB:21	38.1
					I_FireSensorA36	A36.JB:5	38.1
					I_IgnKeySw	A36.JB:2	3.2
A54.J1:3	O_CondSpdVariabl				B_BatterySaver	.	
					B_EngineRun	.	
					B_LowVoltage	.	
					B_TstModHvac	.	
					D_AmbTempLSB	.	
					D_AmbTempMSB	.	
					D_HvacModSig	.	
					D_PassSetPts	.	
					I_BatMonMod54	A54.J1:24	
					I_FireExt1stAl	A36.JB:23	38.1
					I_FireExt2ndAlm	A36.JB:21	38.1
					I_FireSensorA36	A36.JB:5	38.1
					I_IgnKeySw	A36.JB:2	3.2
A54.J1:7	O_PasRfgSol	Passenger Refrigerent Solenoid			B_BatterySaver	.	
					B_EngineRun	.	
					B_LowVoltage	.	
					B_TstModHvac	.	

MULTIPLEX OUTPUT LIST

O_xx... = Physical Ouput Pin ; I_xx... = Physical Input Pin ; D_xx... = CAN Network Signal from the HVAC control Head ; B_xx.. = Multiplex system global Network Variable

Module.Pin#	Signal name		Page	Connected devices	Input involved		
A54.J1:7	O_PasRfgSol	Passenger Refrigerent Solenoid			D_AmbTempLSB	.	
					D_AmbTempMSB	.	
					D_HvacModSig	.	
					D_PassSetPts	.	
					I_BatMonMod54	A54.J1:24	
					I_FireExt1stAl	A36.JB:23	38.1
					I_FireExt2ndAlm	A36.JB:21	38.1
					I_FireSensorA36	A36.JB:5	38.1
					I_IgnKeySw	A36.JB:2	3.2
A54.J2:10	O_ACRecPass	A/C Pass. Gaz Cylinder Recycle			B_BatterySaver	.	
					B_EngineRun	.	
					B_TstModHvac	.	
					B_TstModSAC	.	
					D_HvacModSig	.	
					I_IgnKeySw	A36.JB:2	3.2
A54.J2:13	O_PassHeatVlvCtl				B_BatterySaver	.	
					B_EngineRun	.	
					B_TstModHvac	.	
					I_BatMonMod54	A54.J1:24	
A54.J2:4	O_AcUnldRH	Hvac Right Hand Cylinder Unloader			B_BatterySaver	.	
					B_EngineRun	.	
					B_LowVoltage	.	
					B_TstModHvac	.	
					D_AmbTempLSB	.	
					D_AmbTempMSB	.	
					D_DriverSetPts	.	
					D_HvacModSig	.	
					D_PassSetPts	.	
					I_AcPresLoSSe	A54.J2:9	
					I_DrvTempSe	A47.J2:11	
					I_FireExt1stAl	A36.JB:23	38.1
					I_FireExt2ndAlm	A36.JB:21	38.1
					I_FireSensorA36	A36.JB:5	38.1
					I_IgnKeySw	A36.JB:2	3.2
A54.J2:7	O_PasHeatSol	Passenger Heat Solenoid Valve			B_BatterySaver	.	
					B_EngineRun	.	
					B_TstModHvac	.	
					D_AmbTempLSB	.	
					D_AmbTempMSB	.	
					D_HvacModSig	.	
					D_PassSetPts	.	
					I_BatMonMod54	A54.J1:24	
					I_FireExt1stAl	A36.JB:23	38.1

MULTIPLEX OUTPUT LIST

O_xx... = Physical Ouput Pin ; I_xx... = Physical Input Pin ; D_xx... = CAN Network Signal from the HVAC control Head ; B_xx.. = Multiplex system global Network Variable

Module.Pin#	Signal name		Page	Connected devices	Input involved		
A54.J2:7	O_PasHeatSol	Passenger Heat Solenoid Valve			I_FireExt2ndAlm	A36.JB:21	38.1
					I_FireSensorA36	A36.JB:5	38.1
					I_IgnKeySw	A36.JB:2	3.2
A55.J1:1	O_DashBackLit	Dash BackLighting			I_HdLtPos1Sw	A56.J1:17	
A55.J1:4	O_Alt	Alternator			B_BatterySaver	.	
					B_EngineRun	.	
					B_TstModHvac	.	
					B_TstModSAC	.	
					D_AmbTempLSB	.	
					D_AmbTempMSB	.	
					D_HvacModSig2	.	
					D_IndexByte	.	
					I_AccKeySw	A36.JB:6	3.2
					I_AltSeLL	A52.J2:8	
					I_AltSeUL	A49.J1:20	
					I_AltSeUR	A52.J2:9	
					I_BatMonMod54	A54.J1:24	
					I_EntDorLockSw	A41.J2:3	
					I_FireExt2ndAlm	A36.JB:21	38.1
					I_HazardSw	A36.JB:4	26.1
					I_IgnKeySw	A36.JB:2	3.2
					I_ParkBrSe	A36.JB:9	12.1
					I_RetdrSig	A50.J1:20	
					I_StartEna1	A52.J1:20	
					I_StartEna2	A36.JB:1	3.2
A55.J1:7	O_BackUpMon	Backup Monitor Signal			I_BackUpCamSw	A55.J2:8	
A55.J2:15	O_GateWayPwr				D_VipSteering1	.	
					I_A55_NormalMode	.	
					I_IgnKeySw	A36.JB:2	3.2
A56.J1:10	O_ClusterDown				D_VipSteering1	.	
					D_VipSteering3	.	
					I_A56NormalMode	.	
					I_HiBeamCallSw	A56.J1:20	
					I_IgnKeySw	A36.JB:2	3.2
					I_LHFlshSwLHom	A56.J2:3	
					I_RHFlshSwLHom	A56.J2:4	
A56.J1:13	O_EngineRun	Engine Run Signal			B_EngineRun	.	
					D_HvacModSig	.	
					I_BatMonMod54	A54.J1:24	
					I_IgnKeySw	A36.JB:2	3.2
A56.J1:3	O_ClusterSelect				D_VipSteering1	.	
					D_VipSteering2	.	
					I_A56NormalMode	.	

MULTIPLEX OUTPUT LIST

O_xx... = Physical Ouput Pin ; I_xx... = Physical Input Pin ; D_xx... = CAN Network Signal from the HVAC control Head ; B_xx.. = Multiplex system global Network Variable

Module.Pin#	Signal name		Page	Connected devices	Input involved		
A56.J1:3	O_ClusterSelect				I_HiBeamCallSw	A56.J1:20	
					I_IgnKeySw	A36.JB:2	3.2
					I_LHFlshSwLHom	A56.J2:3	
					I_RHFlshSwLHom	A56.J2:4	
A56.J1:4	O_ClusterEsc				D_VipSteering1	.	
					D_VipSteering3	.	
					I_A56NormalMode	.	
					I_HiBeamCallSw	A56.J1:20	
					I_IgnKeySw	A36.JB:2	3.2
					I_LHFlshSwLHom	A56.J2:3	
					I_RHFlshSwLHom	A56.J2:4	
A56.J1:7	O_ClusterUp				D_VipSteering1	.	
					D_VipSteering3	.	
					I_A56NormalMode	.	
					I_HiBeamCallSw	A56.J1:20	
					I_IgnKeySw	A36.JB:2	3.2
					I_LHFlshSwLHom	A56.J2:3	
					I_RHFlshSwLHom	A56.J2:4	
A58.J1:1	O_SldO1MoSpeedA	Slide-Out 1 Motor Speed Control A			I_BatMonMod58	A58.J1:24	
					I_BatMonMod59	A59.J1:24	
					I_BatMonMod60	A60.J1:24	
					I_BatMonMod61	A61.J1:24	
					I_FFlr4FrLimSw	A61.J2:8	
					I_FFlr4RrLimSw	A61.J2:9	
					I_IgnKeySw	A36.JB:2	3.2
					I_Sld4PosFFMoFr	A61.J2:11	
					I_Sld4PosFFMoRr	A61.J2:12	
					I_SldO1CloseSw	A58.J1:21	
					I_SldO1LimiOutSw	A58.J2:9	
					I_SldO1OpenSw	A58.J1:20	
					I_SldO1PBrakeSw	A58.J2:6	
					I_SldO1VacPrSe	A58.J2:11	
					I_SldO2LimiOutSw	A59.J2:9	
					I_SldO2PBrakeSw	A59.J2:6	
					I_SldO3LimiOutSw	A60.J2:9	
					I_SldO3PBrakeSw	A60.J2:6	
					I_SldO4PBrakeSw	A61.J2:6	
A58.J1:10	O_SldO1SealDefSo	Slide_Out 1 Seal Deflating Valve			I_BatMonMod58	A58.J1:24	
					I_IgnKeySw	A36.JB:2	3.2
					I_SldO1PBrakeSw	A58.J2:6	
A58.J1:16	O_SldO1Motneg	Slide_Out 1 Motor -			I_BatMonMod58	A58.J1:24	
					I_BatMonMod59	A59.J1:24	
					I_BatMonMod60	A60.J1:24	

MULTIPLEX OUTPUT LIST

O_xx... = Physical Ouput Pin ; I_xx... = Physical Input Pin ; D_xx... = CAN Network Signal from the HVAC control Head ; B_xx.. = Multiplex system global Network Variable

Module.Pin#	Signal name		Page	Connected devices	Input involved		
A58.J1:16	O_SldO1Motneg	Slide_Out 1 Motor -			I_BatMonMod61	A61.J1:24	
					I_FFlr4FrLimSw	A61.J2:8	
					I_FFlr4RrLimSw	A61.J2:9	
					I_IgnKeySw	A36.JB:2	3.2
					I_Sld4PosFFMoFr	A61.J2:11	
					I_Sld4PosFFMoRr	A61.J2:12	
					I_SldO1CloseSw	A58.J1:21	
					I_SldO1LimiOutSw	A58.J2:9	
					I_SldO1OpenSw	A58.J1:20	
					I_SldO1PBrakeSw	A58.J2:6	
					I_SldO1VacPrSe	A58.J2:11	
					I_SldO2LimiOutSw	A59.J2:9	
					I_SldO2PBrakeSw	A59.J2:6	
					I_SldO3LimiOutSw	A60.J2:9	
					I_SldO3PBrakeSw	A60.J2:6	
					I_SldO4PBrakeSw	A61.J2:6	
A58.J1:19	O_SldO1Motpos	Slide_Out 1 Motor +			I_BatMonMod58	A58.J1:24	
					I_BatMonMod59	A59.J1:24	
					I_BatMonMod60	A60.J1:24	
					I_BatMonMod61	A61.J1:24	
					I_FFlr4FrLimSw	A61.J2:8	
					I_FFlr4RrLimSw	A61.J2:9	
					I_IgnKeySw	A36.JB:2	3.2
					I_Sld4PosFFMoFr	A61.J2:11	
					I_Sld4PosFFMoRr	A61.J2:12	
					I_SldO1CloseSw	A58.J1:21	
					I_SldO1LimiOutSw	A58.J2:9	
					I_SldO1OpenSw	A58.J1:20	
					I_SldO1VacPrSe	A58.J2:11	
					I_SldO2LimiOutSw	A59.J2:9	
					I_SldO2PBrakeSw	A59.J2:6	
					I_SldO3LimiOutSw	A60.J2:9	
					I_SldO3PBrakeSw	A60.J2:6	
					I_SldO4PBrakeSw	A61.J2:6	
A58.J1:3	O_SldO1MoSpeedB	Slide-Out 1 Motor Speed Control B			I_BatMonMod58	A58.J1:24	
					I_BatMonMod59	A59.J1:24	
					I_BatMonMod60	A60.J1:24	
					I_BatMonMod61	A61.J1:24	
					I_FFlr4FrLimSw	A61.J2:8	
					I_FFlr4RrLimSw	A61.J2:9	
					I_IgnKeySw	A36.JB:2	3.2
					I_Sld4PosFFMoFr	A61.J2:11	
					I_Sld4PosFFMoRr	A61.J2:12	

MULTIPLEX OUTPUT LIST

O_xx... = Physical Ouput Pin ; I_xx... = Physical Input Pin ; D_xx... = CAN Network Signal from the HVAC control Head ; B_xx.. = Multiplex system global Network Variable

Module.Pin#	Signal name		Page	Connected devices	Input involved		
A58.J1:3	O_SldO1MoSpeedB	Slide-Out 1 Motor Speed Control B			I_SldO1CloseSw	A58.J1:21	
					I_SldO1LimiOutSw	A58.J2:9	
					I_SldO1OpenSw	A58.J1:20	
					I_SldO1PBrakeSw	A58.J2:6	
					I_SldO1VacPrSe	A58.J2:11	
					I_SldO2LimiOutSw	A59.J2:9	
					I_SldO2PBrakeSw	A59.J2:6	
					I_SldO3LimiOutSw	A60.J2:9	
					I_SldO3PBrakeSw	A60.J2:6	
					I_SldO4PBrakeSw	A61.J2:6	
A58.J1:4	O_SldO1RemoteLed	Slide_Out 1 Remote Led			I_BatMonMod58	A58.J1:24	
					I_IgnKeySw	A36.JB:2	3.2
					I_SldO1CloseSw	A58.J1:21	
					I_SldO1LimiOutSw	A58.J2:9	
					I_SldO1OpenSw	A58.J1:20	
					I_SldO1PBrakeSw	A58.J2:6	
					I_SldO1Supply5v	A58.J2:15	
					I_SldO1VacPrSe	A58.J2:11	
A58.J1:7	O_SldO1SealInfSo	Slide_Out 1 Seal Inflating Valve			I_SldO1LimiOutSw	A58.J2:9	
A58.J2:1	O_SldO1VaccGenSo	Slide_Out 1 Seal Vaccum Generator			I_BatMonMod58	A58.J1:24	
					I_BatMonMod59	A59.J1:24	
					I_BatMonMod60	A60.J1:24	
					I_BatMonMod61	A61.J1:24	
					I_IgnKeySw	A36.JB:2	3.2
					I_SldO1PBrakeSw	A58.J2:6	
					I_SldO2PBrakeSw	A59.J2:6	
					I_SldO3PBrakeSw	A60.J2:6	
					I_SldO4PBrakeSw	A61.J2:6	
A58.J2:4	O_SldO1SecuPinSo	Slide-Out 1 Security Pins			I_SldO1PBrakeSw	A58.J2:6	
					I_SldO2PBrakeSw	A59.J2:6	
					I_SldO3PBrakeSw	A60.J2:6	
					I_SldO4PBrakeSw	A61.J2:6	
A59.J1:1	O_SldO2MoSpeedA	Slide-Out 2 Motor Speed Control A			I_BatMonMod58	A58.J1:24	
					I_BatMonMod59	A59.J1:24	
					I_BatMonMod60	A60.J1:24	
					I_BatMonMod61	A61.J1:24	
					I_FFlr4FrLimSw	A61.J2:8	
					I_FFlr4RrLimSw	A61.J2:9	
					I_IgnKeySw	A36.JB:2	3.2
					I_Sld4PosFFMoFr	A61.J2:11	
					I_Sld4PosFFMoRr	A61.J2:12	
					I_SldO1LimiOutSw	A58.J2:9	
					I_SldO1PBrakeSw	A58.J2:6	

MULTIPLEX OUTPUT LIST

O_xx... = Physical Ouput Pin ; I_xx... = Physical Input Pin ; D_xx... = CAN Network Signal from the HVAC control Head ; B_xx.. = Multiplex system global Network Variable

Module.Pin#	Signal name		Page	Connected devices	Input involved		
A59.J1:1	O_SldO2MoSpeedA	Slide-Out 2 Motor Speed Control A			I_SldO1VacPrSe	A58.J2:11	
					I_SldO2CloseSw	A59.J1:21	
					I_SldO2LimiOutSw	A59.J2:9	
					I_SldO2OpenSw	A59.J1:20	
					I_SldO2PBrakeSw	A59.J2:6	
					I_SldO3LimiOutSw	A60.J2:9	
					I_SldO3PBrakeSw	A60.J2:6	
					I_SldO4PBrakeSw	A61.J2:6	
A59.J1:10	O_SldO2SealDefSo	Slide_Out 2 Seal Deflating Valve			I_BatMonMod59	A59.J1:24	
					I_IgnKeySw	A36.JB:2	3.2
					I_SldO2PBrakeSw	A59.J2:6	
A59.J1:16	O_SldO2Motneg	Slide_Out 2 Motor -			I_BatMonMod58	A58.J1:24	
					I_BatMonMod59	A59.J1:24	
					I_BatMonMod60	A60.J1:24	
					I_BatMonMod61	A61.J1:24	
					I_FFlr4FrLimSw	A61.J2:8	
					I_FFlr4RrLimSw	A61.J2:9	
					I_IgnKeySw	A36.JB:2	3.2
					I_Sld4PosFFMoFr	A61.J2:11	
					I_Sld4PosFFMoRr	A61.J2:12	
					I_SldO1LimiOutSw	A58.J2:9	
					I_SldO1PBrakeSw	A58.J2:6	
					I_SldO1VacPrSe	A58.J2:11	
					I_SldO2CloseSw	A59.J1:21	
					I_SldO2LimiOutSw	A59.J2:9	
					I_SldO2OpenSw	A59.J1:20	
					I_SldO2PBrakeSw	A59.J2:6	
					I_SldO3LimiOutSw	A60.J2:9	
					I_SldO3PBrakeSw	A60.J2:6	
					I_SldO4PBrakeSw	A61.J2:6	
A59.J1:19	O_SldO2Motpos	Slide_Out 2 Motor +			I_BatMonMod58	A58.J1:24	
					I_BatMonMod59	A59.J1:24	
					I_BatMonMod60	A60.J1:24	
					I_BatMonMod61	A61.J1:24	
					I_FFlr4FrLimSw	A61.J2:8	
					I_FFlr4RrLimSw	A61.J2:9	
					I_IgnKeySw	A36.JB:2	3.2
					I_Sld4PosFFMoFr	A61.J2:11	
					I_Sld4PosFFMoRr	A61.J2:12	
					I_SldO1LimiOutSw	A58.J2:9	
					I_SldO1PBrakeSw	A58.J2:6	
					I_SldO1VacPrSe	A58.J2:11	
					I_SldO2CloseSw	A59.J1:21	

MULTIPLEX OUTPUT LIST

O_xx... = Physical Ouput Pin ; I_xx... = Physical Input Pin ; D_xx... = CAN Network Signal from the HVAC control Head ; B_xx.. = Multiplex system global Network Variable

Module.Pin#	Signal name		Page	Connected devices	Input involved		
A59.J1:19	O_SldO2Motpos	Slide_Out 2 Motor +			I_SldO2LimiOutSw	A59.J2:9	
					I_SldO2OpenSw	A59.J1:20	
					I_SldO3LimiOutSw	A60.J2:9	
					I_SldO3PBrakeSw	A60.J2:6	
					I_SldO4PBrakeSw	A61.J2:6	
A59.J1:3	O_SldO2MoSpeedB	Slide-Out 2 Motor Speed Control B			I_BatMonMod58	A58.J1:24	
					I_BatMonMod59	A59.J1:24	
					I_BatMonMod60	A60.J1:24	
					I_BatMonMod61	A61.J1:24	
					I_FFlr4FrLimSw	A61.J2:8	
					I_FFlr4RrLimSw	A61.J2:9	
					I_IgnKeySw	A36.JB:2	3.2
					I_Sld4PosFFMoFr	A61.J2:11	
					I_Sld4PosFFMoRr	A61.J2:12	
					I_SldO1LimiOutSw	A58.J2:9	
					I_SldO1PBrakeSw	A58.J2:6	
					I_SldO1VacPrSe	A58.J2:11	
					I_SldO2CloseSw	A59.J1:21	
					I_SldO2LimiOutSw	A59.J2:9	
					I_SldO2OpenSw	A59.J1:20	
					I_SldO2PBrakeSw	A59.J2:6	
					I_SldO3LimiOutSw	A60.J2:9	
					I_SldO3PBrakeSw	A60.J2:6	
					I_SldO4PBrakeSw	A61.J2:6	
A59.J1:4	O_SldO2RemoteLed	Slide_Out 2 Remote Led			I_BatMonMod59	A59.J1:24	
					I_IgnKeySw	A36.JB:2	3.2
					I_SldO1VacPrSe	A58.J2:11	
					I_SldO2CloseSw	A59.J1:21	
					I_SldO2LimiOutSw	A59.J2:9	
					I_SldO2OpenSw	A59.J1:20	
					I_SldO2PBrakeSw	A59.J2:6	
					I_SldO2Supply5v	A59.J2:15	
A59.J1:7	O_SldO2SealInfSo	Slide_Out 2 Seal Inflating Valve			I_SldO2LimiOutSw	A59.J2:9	
A60.J1:1	O_SldO3MoSpeedA				I_BatMonMod58	A58.J1:24	
					I_BatMonMod59	A59.J1:24	
					I_BatMonMod60	A60.J1:24	
					I_BatMonMod61	A61.J1:24	
					I_FFlr4FrLimSw	A61.J2:8	
					I_FFlr4RrLimSw	A61.J2:9	
					I_IgnKeySw	A36.JB:2	3.2
					I_Sld4PosFFMoFr	A61.J2:11	
					I_Sld4PosFFMoRr	A61.J2:12	
					I_SldO1LimiOutSw	A58.J2:9	

MULTIPLEX OUTPUT LIST

O_xx... = Physical Ouput Pin ; I_xx... = Physical Input Pin ; D_xx... = CAN Network Signal from the HVAC control Head ; B_xx.. = Multiplex system global Network Variable

Module.Pin#	Signal name		Page	Connected devices	Input involved		
A60.J1:1	O_SldO3MoSpeedA				I_SldO1PBrakeSw	A58.J2:6	
					I_SldO1VacPrSe	A58.J2:11	
					I_SldO2LimiOutSw	A59.J2:9	
					I_SldO2PBrakeSw	A59.J2:6	
					I_SldO3CloseSw	A60.J1:21	
					I_SldO3LimiOutSw	A60.J2:9	
					I_SldO3OpenSw	A60.J1:20	
					I_SldO3PBrakeSw	A60.J2:6	
					I_SldO4PBrakeSw	A61.J2:6	
A60.J1:10	O_SldO3SealDefSo				I_BatMonMod60	A60.J1:24	
					I_IgnKeySw	A36.JB:2	3.2
					I_SldO3PBrakeSw	A60.J2:6	
A60.J1:16	O_SldO3Motneg				I_BatMonMod58	A58.J1:24	
					I_BatMonMod59	A59.J1:24	
					I_BatMonMod60	A60.J1:24	
					I_BatMonMod61	A61.J1:24	
					I_FFlr4FrLimSw	A61.J2:8	
					I_FFlr4RrLimSw	A61.J2:9	
					I_IgnKeySw	A36.JB:2	3.2
					I_Sld4PosFFMoFr	A61.J2:11	
					I_Sld4PosFFMoRr	A61.J2:12	
					I_SldO1LimiOutSw	A58.J2:9	
					I_SldO1PBrakeSw	A58.J2:6	
					I_SldO1VacPrSe	A58.J2:11	
					I_SldO2LimiOutSw	A59.J2:9	
					I_SldO2PBrakeSw	A59.J2:6	
					I_SldO3CloseSw	A60.J1:21	
					I_SldO3LimiOutSw	A60.J2:9	
					I_SldO3OpenSw	A60.J1:20	
					I_SldO3PBrakeSw	A60.J2:6	
					I_SldO4PBrakeSw	A61.J2:6	
A60.J1:19	O_SldO3Motpos				I_BatMonMod58	A58.J1:24	
					I_BatMonMod59	A59.J1:24	
					I_BatMonMod60	A60.J1:24	
					I_BatMonMod61	A61.J1:24	
					I_FFlr4FrLimSw	A61.J2:8	
					I_FFlr4RrLimSw	A61.J2:9	
					I_IgnKeySw	A36.JB:2	3.2
					I_Sld4PosFFMoFr	A61.J2:11	
					I_Sld4PosFFMoRr	A61.J2:12	
					I_SldO1LimiOutSw	A58.J2:9	
					I_SldO1PBrakeSw	A58.J2:6	
					I_SldO1VacPrSe	A58.J2:11	

MULTIPLEX OUTPUT LIST

O_xx... = Physical Ouput Pin ; I_xx... = Physical Input Pin ; D_xx... = CAN Network Signal from the HVAC control Head ; B_xx.. = Multiplex system global Network Variable

Module.Pin#	Signal name		Page	Connected devices	Input involved		
A60.J1:19	O_SldO3Motpos				I_SldO2LimiOutSw	A59.J2:9	
					I_SldO2PBrakeSw	A59.J2:6	
					I_SldO3CloseSw	A60.J1:21	
					I_SldO3LimiOutSw	A60.J2:9	
					I_SldO3OpenSw	A60.J1:20	
					I_SldO4PBrakeSw	A61.J2:6	
A60.J1:3	O_SldO3MoSpeedB				I_BatMonMod58	A58.J1:24	
					I_BatMonMod59	A59.J1:24	
					I_BatMonMod60	A60.J1:24	
					I_BatMonMod61	A61.J1:24	
					I_FFlr4FrLimSw	A61.J2:8	
					I_FFlr4RrLimSw	A61.J2:9	
					I_IgnKeySw	A36.JB:2	3.2
					I_Sld4PosFFMoFr	A61.J2:11	
					I_Sld4PosFFMoRr	A61.J2:12	
					I_SldO1LimiOutSw	A58.J2:9	
					I_SldO1PBrakeSw	A58.J2:6	
					I_SldO1VacPrSe	A58.J2:11	
					I_SldO2LimiOutSw	A59.J2:9	
					I_SldO2PBrakeSw	A59.J2:6	
					I_SldO3CloseSw	A60.J1:21	
					I_SldO3LimiOutSw	A60.J2:9	
					I_SldO3OpenSw	A60.J1:20	
					I_SldO3PBrakeSw	A60.J2:6	
					I_SldO4PBrakeSw	A61.J2:6	
A60.J1:4	O_SldO3RemoteLed				I_BatMonMod60	A60.J1:24	
					I_IgnKeySw	A36.JB:2	3.2
					I_SldO1VacPrSe	A58.J2:11	
					I_SldO3CloseSw	A60.J1:21	
					I_SldO3LimiOutSw	A60.J2:9	
					I_SldO3OpenSw	A60.J1:20	
					I_SldO3PBrakeSw	A60.J2:6	
					I_SldO3Supply5v	A60.J2:15	
A60.J1:7	O_SldO3SealInfSo				I_SldO3LimiOutSw	A60.J2:9	
A61.J1:10	O_SldO4SealDefSo				I_BatMonMod61	A61.J1:24	
					I_IgnKeySw	A36.JB:2	3.2
					I_SldO4PBrakeSw	A61.J2:6	
A61.J1:16	O_Sld4FFMoOpen				I_BatMonMod58	A58.J1:24	
					I_BatMonMod59	A59.J1:24	
					I_BatMonMod60	A60.J1:24	
					I_BatMonMod61	A61.J1:24	
					I_FFlr4FrLimSw	A61.J2:8	
					I_FFlr4RrLimSw	A61.J2:9	

MULTIPLEX OUTPUT LIST

O_xx... = Physical Ouput Pin ; I_xx... = Physical Input Pin ; D_xx... = CAN Network Signal from the HVAC control Head ; B_xx.. = Multiplex system global Network Variable

Module.Pin#	Signal name		Page	Connected devices	Input involved		
A61.J1:16	O_Sld4FFMoOpen				I_IgnKeySw	A36.JB:2	3.2
					I_Sld4PosFFMoFr	A61.J2:11	
					I_Sld4PosFFMoRr	A61.J2:12	
					I_SldO1LimiOutSw	A58.J2:9	
					I_SldO1PBrakeSw	A58.J2:6	
					I_SldO1VacPrSe	A58.J2:11	
					I_SldO2LimiOutSw	A59.J2:9	
					I_SldO2PBrakeSw	A59.J2:6	
					I_SldO3LimiOutSw	A60.J2:9	
					I_SldO3PBrakeSw	A60.J2:6	
					I_SldO4CloseSw	A61.J1:21	
					I_SldO4OpenSw	A61.J1:20	
					I_SldO4PBrakeSw	A61.J2:6	
A61.J1:19	O_Sld4FFMoClose				I_BatMonMod58	A58.J1:24	
					I_BatMonMod59	A59.J1:24	
					I_BatMonMod60	A60.J1:24	
					I_BatMonMod61	A61.J1:24	
					I_FFlr4FrLimSw	A61.J2:8	
					I_FFlr4RrLimSw	A61.J2:9	
					I_IgnKeySw	A36.JB:2	3.2
					I_Sld4PosFFMoFr	A61.J2:11	
					I_Sld4PosFFMoRr	A61.J2:12	
					I_SldO1LimiOutSw	A58.J2:9	
					I_SldO1PBrakeSw	A58.J2:6	
					I_SldO1VacPrSe	A58.J2:11	
					I_SldO2LimiOutSw	A59.J2:9	
					I_SldO2PBrakeSw	A59.J2:6	
					I_SldO3LimiOutSw	A60.J2:9	
					I_SldO3PBrakeSw	A60.J2:6	
					I_SldO4CloseSw	A61.J1:21	
					I_SldO4OpenSw	A61.J1:20	
					I_SldO4PBrakeSw	A61.J2:6	
A61.J1:4	O_SldO4RemoteLed				I_BatMonMod61	A61.J1:24	
					I_FFlr4FrLimSw	A61.J2:8	
					I_FFlr4RrLimSw	A61.J2:9	
					I_IgnKeySw	A36.JB:2	3.2
					I_Sld4PosFFMoFr	A61.J2:11	
					I_Sld4PosFFMoRr	A61.J2:12	
					I_SldO1VacPrSe	A58.J2:11	
					I_SldO4CloseSw	A61.J1:21	
					I_SldO4OpenSw	A61.J1:20	
					I_SldO4PBrakeSw	A61.J2:6	
A61.J1:7	O_SldO4SealInfSo				I_BatMonMod61	A61.J1:24	

MULTIPLEX OUTPUT LIST

O_xx... = Physical Ouput Pin ; I_xx... = Physical Input Pin ; D_xx... = CAN Network Signal from the HVAC control Head ; B_xx.. = Multiplex system global Network Variable

Module.Pin#	Signal name		Page	Connected devices	Input involved		
A61.J1:7	O_SldO4SealInfSo				I_FFlr4FrLimSw	A61.J2:8	
					I_FFlr4RrLimSw	A61.J2:9	
					I_IgnKeySw	A36.JB:2	3.2
					I_Sld4PosFFMoFr	A61.J2:11	
					I_Sld4PosFFMoRr	A61.J2:12	
A61.J2:1	O_FFlr4MoRaise				I_BatMonMod61	A61.J1:24	
					I_FFlr4FrLimSw	A61.J2:8	
					I_FFlr4RrLimSw	A61.J2:9	
					I_IgnKeySw	A36.JB:2	3.2
					I_Sld4PosFFMoFr	A61.J2:11	
					I_Sld4PosFFMoRr	A61.J2:12	
A61.J2:4	O_FFlr4MoLower				I_BatMonMod61	A61.J1:24	
					I_FFlr4FrLimSw	A61.J2:8	
					I_FFlr4RrLimSw	A61.J2:9	
					I_IgnKeySw	A36.JB:2	3.2
					I_Sld4PosFFMoFr	A61.J2:11	
					I_Sld4PosFFMoRr	A61.J2:12	

MULTIPLEX OUTPUT LIST

Module.Pin#	Signal name	Hvac AC Clutch Solenoid	Page	Connected devices	Input involved			
.	O_AcCluSol				D_AmbTempMSB	.		#
					D_DriverSetPts	.		
					D_HvacModSig	.		
					D_HvacModSig1	.		
					D_HvacModSig2	.		
					D_PassSetPts	.		
					D_SuperHeatAct	.		
					I_AcPresHiSSe	AE54.J2:8	18.2	
					I_DrvTempSe	AE47.J2:11	18.1	
					I_FireExt1stAl	AE44.J2:9	38.1	
					I_FireExt2ndAlm	AE44.J2:8	38.1	
					I_FireSensorA36	A36.JA:14		
					I_IgnKeySw	AE44.J1:20	3.2	
					I_SAcSuperHeatSe	AE47.J2:9	18.3	
					I_SuperHeatSe	AE54.J2:11	18.2	
					B_BatterySaver	.		
					B_EngineRun	.		
					B_LowVoltage	.		
					B_TstModHvac	.		
					B_TstModSAC	.		
AE54.J2:10	O_ACRecPass	A/C Pass. Gaz Cylinder Recycle	18.2		D_HvacModSig	.		
					D_HvacModSig1	.		
					D_SuperHeatAct	.		
					I_FireExt1stAl	AE44.J2:9	38.1	
					I_FireExt2ndAlm	AE44.J2:8	38.1	
					I_FireSensorA36	A36.JA:14		
					I_IgnKeySw	AE44.J1:20	3.2	
					B_BatterySaver	.		
					B_EngineRun	.		
					B_TstModHvac	.		
					B_TstModSAC	.		
AE54.J2:4	O_AcUnldRH	Hvac Right Hand Cylinder Unloader	18.2		D_AmbTempLSB	.		
					D_AmbTempMSB	.		
					D_DriverSetPts	.		
					D_HvacModSig	.		
					D_HvacModSig1	.		
					D_HvacModSig2	.		
					D_PassSetPts	.		
					D_SuperHeatAct	.		
					I_AcPresHiSSe	AE54.J2:8	18.2	
					I_AcPresLoSSe	AE54.J2:9	18.2	
					I_DrvTempSe	AE47.J2:11	18.1	
					I_FireExt1stAl	AE44.J2:9	38.1	

MULTIPLEX OUTPUT LIST

Module.Pin#	Signal name	Hvac AC Clutch Solenoid	Page	Connected devices	Input involved		
AE54.J2:4	O_AcUnldRH	Hvac Right Hand Cylinder Unloader	18.2		I_FireExt2ndAlm	AE44.J2:8	38.1
					I_FireSensorA36	A36.JA:14	
					I_IgnKeySw	AE44.J1:20	3.2
					B_BatterySaver	.	
					B_EngineRun	.	
					B_LowVoltage	.	
					B_TstModHvac	.	
AE54.J1:10	O_ACWaterPmp	Hvac Water Pump	18.2		D_AmbTempLSB	.	
					D_AmbTempMSB	.	
					D_HvacModSig	.	
					I_BatMonMod54	AE54.J1:24	
					I_FireExt1stAl	AE44.J2:9	38.1
					I_FireExt2ndAlm	AE44.J2:8	38.1
					I_FireSensorA36	A36.JA:14	
					I_IgnKeySw	AE44.J1:20	3.2
					B_BatterySaver	.	
					B_EngineRun	.	
					B_TstModHvac	.	
AE50.J1:4	O_AirDryer		37.1		I_BatMonMod50	AE50.J1:24	
					I_IgnKeySw	AE44.J1:20	3.2
AE43.J1:10	O_AirDryerVip				I_IgnKeySw	AE44.J1:20	3.2
AE55.J1:4	O_Alt	Alternator	10.1	A14.C:7	D_AmbTempLSB	.	
					D_AmbTempMSB	.	
					D_IndexByte	.	
					I_AltSeLL	AE52.J2:8	1.1
					I_AltSeUL	AE49.J1:20	1.1
					I_AltSeUR	AE52.J2:9	1.1
					I_BatMonMod47	AE47.J1:24	
					I_BatMonMod51	AE51.J1:24	
					I_BatMonMod54	AE54.J1:24	
					I_IgnKeySw	AE44.J1:20	3.2
					I_RetdrSig	AE50.J1:20	15.1
					I_StartEna1	AE52.J1:20	3.2
					I_StartEna2	AE41.J1:5	3.2
					B_BatterySaver	.	
					B_EngineRun	.	
					B_TstModHvac	.	
					B_TstModSAC	.	
AE52.J2:1	O_AltChrCtrLL		1.1		D_AmbTempLSB	.	
					D_AmbTempMSB	.	
					D_IndexByte	.	
					I_AltSeLL	AE52.J2:8	1.1
					I_AltSeUL	AE49.J1:20	1.1

MULTIPLEX OUTPUT LIST

Module.Pin#	Signal name	Hvac AC Clutch Solenoid	Page	Connected devices	Input involved		
AE52.J2:1	O_AltChrCtrLL		1.1		I_AltSeUR	AE52.J2:9	1.1
					I_BatMonMod47	AE47.J1:24	
					I_BatMonMod51	AE51.J1:24	
					I_BatMonMod54	AE54.J1:24	
					I_IgnKeySw	AE44.J1:20	3.2
					I_RetdrSig	AE50.J1:20	15.1
					I_StartEna1	AE52.J1:20	3.2
					I_StartEna2	AE41.J1:5	3.2
					B_BatterySaver	.	
					B_EngineRun	.	
					B_TstModHvac	.	
					B_TstModSAC	.	
AE49.J2:1	O_AltChrCtrUL		1.1		D_AmbTempLSB	.	
					D_AmbTempMSB	.	
					D_IndexByte	.	
					I_AltSeLL	AE52.J2:8	1.1
					I_AltSeUL	AE49.J1:20	1.1
					I_AltSeUR	AE52.J2:9	1.1
					I_BatMonMod47	AE47.J1:24	
					I_BatMonMod51	AE51.J1:24	
					I_BatMonMod54	AE54.J1:24	
					I_IgnKeySw	AE44.J1:20	3.2
					I_RetdrSig	AE50.J1:20	15.1
					I_StartEna1	AE52.J1:20	3.2
					I_StartEna2	AE41.J1:5	3.2
					B_BatterySaver	.	
					B_EngineRun	.	
					B_TstModHvac	.	
					B_TstModSAC	.	
AE52.J2:4	O_AltChrCtrUR		1.1		D_AmbTempLSB	.	
					D_AmbTempMSB	.	
					D_IndexByte	.	
					I_AltSeLL	AE52.J2:8	1.1
					I_AltSeUL	AE49.J1:20	1.1
					I_AltSeUR	AE52.J2:9	1.1
					I_BatMonMod47	AE47.J1:24	
					I_BatMonMod51	AE51.J1:24	
					I_BatMonMod54	AE54.J1:24	
					I_IgnKeySw	AE44.J1:20	3.2
					I_RetdrSig	AE50.J1:20	15.1
					I_StartEna1	AE52.J1:20	3.2
					I_StartEna2	AE41.J1:5	3.2
					B_BatterySaver	.	

MULTIPLEX OUTPUT LIST

Module.Pin#	Signal name	Hvac AC Clutch Solenoid	Page	Connected devices	Input involved		
AE52.J2:4	O_AltChrCtrUR		1.1		B_EngineRun	.	
					B_TstModHvac	.	
					B_TstModSAC	.	
AE44.J1:1	O_AuxFanSpeed	Auxiliary fan speed control			D_HvacModSig1	.	
					B_BatterySaver	.	
					B_EngineRun	.	
AE47.J1:16	O_AuxWaterPump	Auxiliary water pump	18.3		D_AmbTempLSB	.	
					D_AmbTempMSB	.	
					D_HvacModSig	.	
					D_HvacModSig1	.	
					I_DefrostHighSw	AE47.J1:21	18.1
					I_DefrostLowSw	AE47.J2:6	18.1
					B_BatterySaver	.	
					B_EngineRun	.	
					B_TstModSAC	.	
AE50.J1:10	O_BackUpCam	Back up camera			I_BackUpCamSw	AE55.J2:8	
AE50.J2:10	O_BackUpLt		26.3		B_BatterySaver	.	
					B_EngineRun	.	
					B_TstModExtLight	.	
					B_TstModHvac	.	
					B_TstModHvacNext	.	
					B_TstModSAC	.	
					B_TstModSACNext	.	
AE55.J1:7	O_BackUpMon	Backup Monitor Signal	60.1		I_BackUpCamSw	AE55.J2:8	
AE50.J2:1	O_BrLTLowerLed		26.2		I_BrakePedPri	AE51.J1:21	12.1
					I_BrakePedSec	AE41.J1:21	12.1
					I_FogLightSw	AE56.J2:5	26.5
					I_HdLtPos1Sw	AE56.J1:17	26.1
					I_HdLtPos2Sw	AE56.J1:5	26.1
					I_IgnKeySw	AE44.J1:20	3.2
					I_KeylessIntru	AE41.J2:6	29.1
					I_KeylessPanic	AE41.J2:5	29.1
					I_ParkBrSe	AE41.J1:17	12.1
					I_RetdrSig	AE50.J1:20	15.1
					B_BatterySaver	.	
					B_EngineRun	.	
					B_TstModExtLight	.	
AE51.J2:7	O_BrLTUpperLed		26.2		I_BrakePedPri	AE51.J1:21	12.1
					I_BrakePedSec	AE41.J1:21	12.1
					I_FogLightSw	AE56.J2:5	26.5
					I_HdLtPos1Sw	AE56.J1:17	26.1
					I_HdLtPos2Sw	AE56.J1:5	26.1
					I_IgnKeySw	AE44.J1:20	3.2

MULTIPLEX OUTPUT LIST

Module.Pin#	Signal name	Hvac AC Clutch Solenoid	Page	Connected devices	Input involved		
AE51.J2:7	O_BrLTUpperLed		26.2		I_KeylessIntru	AE41.J2:6	29.1
					I_KeylessPanic	AE41.J2:5	29.1
					I_ParkBrSe	AE41.J1:17	12.1
					I_RetdrSig	AE50.J1:20	15.1
					B_BatterySaver	.	
					B_EngineRun	.	
					B_TstModExtLight	.	
AE56.J1:10	O_ClusterDown		10.1	A14.A:7	D_VipSteering1	.	
					D_VipSteering3	.	
					I_A56NormalMode	AE.	
					I_HiBeamCallSw	AE56.J1:20	26.1
					I_IgnKeySw	AE44.J1:20	3.2
					I_LHFlshSwLHom	AE56.J2:3	26.1
					I_RHFlshSwLHom	AE56.J2:4	26.1
AE56.J1:4	O_ClusterEsc		10.1	A14.A:5	D_VipSteering1	.	
					D_VipSteering3	.	
					I_A56NormalMode	AE.	
					I_HiBeamCallSw	AE56.J1:20	26.1
					I_IgnKeySw	AE44.J1:20	3.2
					I_LHFlshSwLHom	AE56.J2:3	26.1
					I_RHFlshSwLHom	AE56.J2:4	26.1
AE56.J1:3	O_ClusterSelect		10.1	A14.A:4	D_VipSteering1	.	
					D_VipSteering2	.	
					I_A56NormalMode	AE.	
					I_HiBeamCallSw	AE56.J1:20	26.1
					I_IgnKeySw	AE44.J1:20	3.2
					I_LHFlshSwLHom	AE56.J2:3	26.1
					I_RHFlshSwLHom	AE56.J2:4	26.1
AE56.J1:7	O_ClusterUp		10.1	A14.A:6	D_VipSteering1	.	
					D_VipSteering3	.	
					I_A56NormalMode	AE.	
					I_HiBeamCallSw	AE56.J1:20	26.1
					I_IgnKeySw	AE44.J1:20	3.2
					I_LHFlshSwLHom	AE56.J2:3	26.1
					I_RHFlshSwLHom	AE56.J2:4	26.1
AE54.J1:3	O_CondSpdVariabl		18.2		D_AmbTempLSB	.	
					D_AmbTempMSB	.	
					D_HvacModSig	.	
					D_HvacModSig1	.	
					D_PassSetPts	.	
					D_SuperHeatAct	.	
					I_AcPresHiSSe	AE54.J2:8	18.2
					I_BatMonMod54	AE54.J1:24	

MULTIPLEX OUTPUT LIST

Module.Pin#	Signal name	Hvac AC Clutch Solenoid	Page	Connected devices	Input involved		
AE54.J1:3	O_CondSpdVariabl		18.2		I_FireExt1stAl	AE44.J2:9	38.1
					I_FireExt2ndAlm	AE44.J2:8	38.1
					I_FireSensorA36	A36.JA:14	
					I_IgnKeySw	AE44.J1:20	3.2
					B_BatterySaver	.	
					B_EngineRun	.	
					B_LowVoltage	.	
					B_TstModHvac	.	
AE49.J2:4	O_CondSpdVariSAc		18.3		D_HvacModSig	.	
					I_BatMonMod49	AE49.J1:24	
					I_FireExt1stAl	AE44.J2:9	38.1
					B_BatterySaver	.	
					B_EngineRun	.	
					B_TstModSAC	.	
AE42.J1:4	O_ConvEngRun	Converter engine run signal	21.1		B_EngineRun	.	
AE42.J1:3	O_ConvIgnition	Converter ignition signal	21.1		I_IgnKeySw	AE44.J1:20	3.2
AE41.J1:10	O_ConvParkBrk	Converter park brake signal	21.1		I_ParkBrSe	AE41.J1:17	12.1
AE44.J1:3	O_ConvWakeUp	Converter wake up signal	21.1		D_IndexByte	.	
					I_AccKeySw	A36.JA:11	
					I_FireExt1stAl	AE44.J2:9	38.1
					I_FireExt2ndAlm	AE44.J2:8	38.1
					I_FireSensorA36	A36.JA:14	
					I_HazardSw	A36.JA:12	
					I_IgnKeySw	AE44.J1:20	3.2
					I_ParkBrSe	AE41.J1:17	12.1
					I_WCLDoorLtch	AE57.J1:2	36.1
					I_WCLFirstLatch	AE57.J2:1	36.1
					I_WCLLoDorSe	AE57.J1:17	36.1
					I_WCLSmallLowDor	AE57.J1:20	36.1
					I_WclSw	AE55.J2:7	36.1
					B_EngineRun	.	
AE43.J2:10	O_CruCtrlRsm	Cruise Control Resume Volvo			D_VipSteering1	.	
					I_A43_NormalMode	AE.	
					I_LowWiperCam	AE47.J1:20	34.1
					I_LwWipIntSw	AE55.J2:10	34.1
					I_LwWshSw	AE55.J2:11	34.1
AE56.J1:16	O_CruCtrlRsm2		14.1		D_VipSteering1	.	
					I_A43_NormalMode	AE.	
					I_LowWiperCam	AE47.J1:20	34.1
					I_LwWipIntSw	AE55.J2:10	34.1
					I_LwWshSw	AE55.J2:11	34.1
AE43.J2:7	O_CruCtrlSet	Cruise Control Set Volvo			D_VipSteering1	.	
					I_A43_NormalMode	AE.	

MULTIPLEX OUTPUT LIST

Module.Pin#	Signal name	Hvac AC Clutch Solenoid	Page	Connected devices	Input involved		
AE43.J2:7	O_CruCtrlSet	Cruise Control Set Volvo			I_LowWiperCam	AE47.J1:20	34.1
					I_LwWipIntSw	AE55.J2:10	34.1
					I_LwWshSw	AE55.J2:11	34.1
AE56.J1:1	O_CruCtrlSet2		14.1		D_VipSteering1	.	
					I_A43_NormalMode	AE.	
					I_LowWiperCam	AE47.J1:20	34.1
					I_LwWipIntSw	AE55.J2:10	34.1
					I_LwWshSw	AE55.J2:11	34.1
AE50.J2:7	O_CtrSdMrkLb	Tag Axle Warning Indicator	26.2		I_FogLightSw	AE56.J2:5	26.5
					I_HdLtPos1Sw	AE56.J1:17	26.1
					I_HdLtPos2Sw	AE56.J1:5	26.1
					B_BatterySaver	.	
					B_EngineRun	.	
					B_TstModExtLight	.	
AE45.J1:10	O_CurbLightsLH		60.2		I_CorneringLtSw	AE56.J2:6	26.5
					I_DockingLtSw	AE56.J2:10	26.5
					I_EntDorOpSe	AE41.J2:2	29.1
					I_HdLtPos1Sw	AE56.J1:17	26.1
					I_IgnKeySw	AE44.J1:20	3.2
					I_LHFlshSw	AE46.J1:20	26.1
					I_LowDockLtsSw	AE56.J2:12	26.5
					I_ParkBrSe	AE41.J1:17	12.1
					B_BatterySaver	.	
					B_EngineRun	.	
					B_TstModExtLight	.	
AE45.J1:13	O_CurbLightsRH		60.2		I_CorneringLtSw	AE56.J2:6	26.5
					I_DockingLtSw	AE56.J2:10	26.5
					I_EntDorOpSe	AE41.J2:2	29.1
					I_HdLtPos1Sw	AE56.J1:17	26.1
					I_IgnKeySw	AE44.J1:20	3.2
					I_ParkBrSe	AE41.J1:17	12.1
					I_RHFlshSw	AE48.J2:5	26.1
					B_BatterySaver	.	
					B_EngineRun	.	
					B_TstModExtLight	.	
AE47.J1:19	O_CutOutRel	Emergency CutOut Relay	3.2		D_IndexByte	.	
					I_AccKeySw	A36.JA:11	
					I_FireExt1stAl	AE44.J2:9	38.1
					I_FireExt2ndAlm	AE44.J2:8	38.1
					I_FireSensorA36	A36.JA:14	
					I_HazardSw	A36.JA:12	
					I_IgnKeySw	AE44.J1:20	3.2
					I_ParkBrSe	AE41.J1:17	12.1

MULTIPLEX OUTPUT LIST

Module.Pin#	Signal name	Hvac AC Clutch Solenoid	Page	Connected devices	Input involved		
AE47.J1:19	O_CutOutRel	Emergency CutOut Relay	3.2		I_WCLDoorLtch	AE57.J1:2	36.1
					I_WCLFirstLatch	AE57.J2:1	36.1
					I_WCLLoDorSe	AE57.J1:17	36.1
					I_WCLSmallLowDor	AE57.J1:20	36.1
					I_WclSw	AE55.J2:7	36.1
					B_EngineRun	.	
A36.JA:8	O_CutOutRelGnd	Emergency CutOut Relay			D_IndexByte	.	
					I_AccKeySw	A36.JA:11	
					I_FireExt1stAl	AE44.J2:9	38.1
					I_FireExt2ndAlm	AE44.J2:8	38.1
					I_FireSensorA36	A36.JA:14	
					I_HazardSw	A36.JA:12	
					I_IgnKeySw	AE44.J1:20	3.2
					I_ParkBrSe	AE41.J1:17	12.1
					I_WCLDoorLtch	AE57.J1:2	36.1
					I_WCLFirstLatch	AE57.J2:1	36.1
					I_WCLLoDorSe	AE57.J1:17	36.1
					I_WCLSmallLowDor	AE57.J1:20	36.1
					I_WclSw	AE55.J2:7	36.1
					B_EngineRun	.	
A36.JA:9	O_CutOutRelRst	Emergency CutOut Relay			D_IndexByte	.	
					I_AccKeySw	A36.JA:11	
					I_FireExt1stAl	AE44.J2:9	38.1
					I_FireExt2ndAlm	AE44.J2:8	38.1
					I_FireSensorA36	A36.JA:14	
					I_HazardSw	A36.JA:12	
					I_IgnKeySw	AE44.J1:20	3.2
					I_ParkBrSe	AE41.J1:17	12.1
					I_WCLDoorLtch	AE57.J1:2	36.1
					I_WCLFirstLatch	AE57.J2:1	36.1
					I_WCLLoDorSe	AE57.J1:17	36.1
					I_WCLSmallLowDor	AE57.J1:20	36.1
					I_WclSw	AE55.J2:7	36.1
					B_EngineRun	.	
AE51.J2:10	O_CyclopeLH		26.2		I_FogLightSw	AE56.J2:5	26.5
					I_HazardSw	A36.JA:12	
					I_HdLtPos1Sw	AE56.J1:17	26.1
					I_HdLtPos2Sw	AE56.J1:5	26.1
					I_IgnKeySw	AE44.J1:20	3.2
					B_BatterySaver	.	
					B_EngineRun	.	
					B_TstModExtLight	.	
AE51.J1:7	O_CyclopeLt	Cyclope Brake Light	26.2		I_BrakePedPri	AE51.J1:21	12.1

MULTIPLEX OUTPUT LIST

Module.Pin#	Signal name	Hvac AC Clutch Solenoid	Page	Connected devices	Input involved		
AE51.J1:7	O_CyclopeLt	Cyclope Brake Light	26.2		I_BrakePedSec	AE41.J1:21	12.1
					I_IgnKeySw	AE44.J1:20	3.2
					I_ParkBrSe	AE41.J1:17	12.1
					B_EngineRun	.	
					B_TstModExtLight	.	
AE51.J2:1	O_CyclopeRH		26.2		I_FogLightSw	AE56.J2:5	26.5
					I_HazardSw	A36.JA:12	
					I_HdLtPos1Sw	AE56.J1:17	26.1
					I_HdLtPos2Sw	AE56.J1:5	26.1
					I_IgnKeySw	AE44.J1:20	3.2
					B_BatterySaver	.	
					B_EngineRun	.	
					B_TstModExtLight	.	
AE55.J1:1	O_DashBackLit	Dash BackLighting			I_HdLtPos1Sw	AE56.J1:17	26.1
AE46.J1:3	O_DashBackLt	Dash Backlightning Light Bulb	19.1		I_DimmerSw	AE55.J1:21	19.1
					I_HdLtPos1Sw	AE56.J1:17	26.1
					I_IgnKeySw	AE44.J1:20	3.2
AE45.J1:3	O_DashTrapNMo	Dash Trap Motor Return	18.1		D_HvacModSig	.	
					D_HvacModSig1	.	
					I_IgnKeySw	AE44.J1:20	3.2
AE45.J1:1	O_DashTrapPMo	Dash Trap Motor	18.1		D_HvacModSig	.	
					D_HvacModSig1	.	
					I_IgnKeySw	AE44.J1:20	3.2
AE43.J2:13	O_DoorLockMo2		29.1		D_IndexByte	.	
					I_AccKeySw	A36.JA:11	
					I_EntDorLockSw	AE41.J2:3	29.1
					I_EntDorOpSe	AE41.J2:2	29.1
					I_FireExt1stAl	AE44.J2:9	38.1
					I_FireExt2ndAlm	AE44.J2:8	38.1
					I_FireSensorA36	A36.JA:14	
					I_HazardSw	A36.JA:12	
					I_IgnKeySw	AE44.J1:20	3.2
					I_KeylessDrUnl	AE41.J2:9	29.1
					I_KeylessLockAll	AE41.J2:8	29.1
					I_KeylessLuggUnl	AE41.J2:7	29.1
					I_ParkBrSe	AE41.J1:17	12.1
					I_WCLDoorLtch	AE57.J1:2	36.1
					I_WCLFirstLatch	AE57.J2:1	36.1
					I_WCLLoDorSe	AE57.J1:17	36.1
					I_WCLSmallLowDor	AE57.J1:20	36.1
					I_WclSw	AE55.J2:7	36.1
					B_EngineRun	.	
AE41.J1:4	O_DoorUnlockMo	Entrance door unlock motor	29.1		D_IndexByte	.	

MULTIPLEX OUTPUT LIST

Module.Pin#	Signal name	Hvac AC Clutch Solenoid	Page	Connected devices	Input involved		
AE41.J1:4	O_DoorUnlockMo	Entrance door unlock motor	29.1		I_AccKeySw	A36.JA:11	
					I_EntDorLockSw	AE41.J2:3	29.1
					I_EntDorOpSe	AE41.J2:2	29.1
					I_FireExt1stAl	AE44.J2:9	38.1
					I_FireExt2ndAlm	AE44.J2:8	38.1
					I_FireSensorA36	A36.JA:14	
					I_HazardSw	A36.JA:12	
					I_IgnKeySw	AE44.J1:20	3.2
					I_KeylessDrUnl	AE41.J2:9	29.1
					I_KeylessLockAll	AE41.J2:8	29.1
					I_KeylessLuggUnl	AE41.J2:7	29.1
					I_ParkBrSe	AE41.J1:17	12.1
					I_WCLDoorLtch	AE57.J1:2	36.1
					I_WCLFirstLatch	AE57.J2:1	36.1
					I_WCLLoDorSe	AE57.J1:17	36.1
					I_WCLSmallLowDor	AE57.J1:20	36.1
					I_WclSw	AE55.J2:7	36.1
					B_EngineRun	.	
AE44.J2:7	O_DriverLtLed		19.1		I_DrvLtSw	AE55.J2:1	19.1
					B_BatterySaver	.	
					B_EngineRun	.	
AE47.J2:1	O_DrvDefFanMo	Driver Defroster Fan Motor	18.1	A24.B:B	D_HvacModSig	.	
					D_HvacModSig1	.	
					D_HvacModSig2	.	
					D_SuperHeatAct	.	
					I_BatMonMod47	AE47.J1:24	
					I_FireExt1stAl	AE44.J2:9	38.1
					I_FireExt2ndAlm	AE44.J2:8	38.1
					I_FireSensorA36	A36.JA:14	
					I_IgnKeySw	AE44.J1:20	3.2
					B_EngineRun	.	
AE47.J1:3	O_DrvHeatSol	Driver Heat Solenoid	18.1	So8:1	D_DriverSetPts	.	
					D_HvacModSig	.	
					D_HvacModSig1	.	
					D_HvacModSig2	.	
					D_SuperHeatAct	.	
					I_BatMonMod47	AE47.J1:24	
					I_FireExt1stAl	AE44.J2:9	38.1
					I_FireExt2ndAlm	AE44.J2:8	38.1
					I_FireSensorA36	A36.JA:14	
					I_IgnKeySw	AE44.J1:20	3.2
					B_BatterySaver	.	
					B_EngineRun	.	

MULTIPLEX OUTPUT LIST

Module.Pin#	Signal name	Hvac AC Clutch Solenoid	Page	Connected devices	Input involved		
AE47.J1:3	O_DrvHeatSol	Driver Heat Solenoid	18.1	So8:1	B_TstModHvac	.	
					B_TstModSAC	.	
AE47.J1:4	O_DrvRecTrap	Driver Recycle Trap	18.1	L203:A	D_HvacModSig	.	
					D_HvacModSig1	.	
					D_SuperHeatAct	.	
					I_FireExt1stAl	AE44.J2:9	38.1
					I_FireExt2ndAlm	AE44.J2:8	38.1
					I_FireSensorA36	A36.JA:14	
					I_IgnKeySw	AE44.J1:20	3.2
					B_BatterySaver	.	
					B_EngineRun	.	
					B_TstModHvac	.	
					B_TstModSAC	.	
AE47.J1:1	O_DrvRfgSol	Driver refrigerent solenoid	18.1		D_AmbTempLSB	.	
					D_AmbTempMSB	.	
					D_DriverSetPts	.	
					D_HvacModSig	.	
					D_HvacModSig1	.	
					D_HvacModSig2	.	
					D_PassSetPts	.	
					D_SuperHeatAct	.	
					I_AcPresHiSSe	AE54.J2:8	18.2
					I_BatMonMod47	AE47.J1:24	
					I_DrvTempSe	AE47.J2:11	18.1
					I_FireExt1stAl	AE44.J2:9	38.1
					I_FireExt2ndAlm	AE44.J2:8	38.1
					I_FireSensorA36	A36.JA:14	
					I_IgnKeySw	AE44.J1:20	3.2
					B_BatterySaver	.	
					B_EngineRun	.	
					B_LowVoltage	.	
					B_TstModHvac	.	
					B_TstModSAC	.	
AE47.J2:13	O_EmirrorAir		31.2		I_IgnKeySw	AE44.J1:20	3.2
					I_LowWiperCam	AE47.J1:20	34.1
					I_LwWshSw	AE55.J2:11	34.1
AE47.J2:10	O_EmirrorHeater		31.2		D_AmbTempLSB	.	
					D_AmbTempMSB	.	
					B_EngineRun	.	
AE56.J1:19	O_EmirrorLines		31.2		I_HazardSw	A36.JA:12	
					I_LHFlshSw	AE46.J1:20	26.1
					I_LHFlshSwRrSig	AE51.J1:20	26.2
					I_RHFlshSw	AE48.J2:5	26.1

MULTIPLEX OUTPUT LIST

Module.Pin#	Signal name	Hvac AC Clutch Solenoid	Page	Connected devices	Input involved		
AE56.J1:19	O_EmirrorLines		31.2		I_RHFlshSwRrSig	AE51.J2:5	26.2
AE52.J1:7	O_EngCmptLb	Engine Compartiment Light Bulb	25.1		I_EngDoorSe	AE52.J2:6	25.1
AE56.J1:13	O_EngineRun	Engine Run Signal	7.1		D_HvacModSig	.	
					I_BatMonMod54	AE54.J1:24	
					I_IgnKeySw	AE44.J1:20	3.2
					B_EngineRun	.	
AE48.J2:10	O_EntDoorWdoDown	Entrance Door Wdo Down	30.1		I_EntDorWdo	AE56.J2:13	30.1
					I_IgnKeySw	AE44.J1:20	3.2
AE48.J2:7	O_EntDoorWdoUp	Entrance Door Wdo Up	30.1		I_EntDorWdo	AE56.J2:13	30.1
					I_IgnKeySw	AE44.J1:20	3.2
AE41.J1:7	O_EntDorLtLed		29.1		D_IndexByte	.	
					I_AccKeySw	A36.JA:11	
					I_DrvLtSw	AE55.J2:1	19.1
					I_EntDorOpSe	AE41.J2:2	29.1
					I_FireExt1stAl	AE44.J2:9	38.1
					I_FireExt2ndAlm	AE44.J2:8	38.1
					I_FireSensorA36	A36.JA:14	
					I_HazardSw	A36.JA:12	
					I_IgnKeySw	AE44.J1:20	3.2
					I_KeylessDrUnl	AE41.J2:9	29.1
					I_KeylessLockAll	AE41.J2:8	29.1
					I_KeylessLuggUnl	AE41.J2:7	29.1
					I_LuggDoorSw	AE43.J1:20	33.1
					I_ParkBrSe	AE41.J1:17	12.1
					I_WCLDoorLtch	AE57.J1:2	36.1
					I_WCLFirstLatch	AE57.J2:1	36.1
					I_WCLLoDorSe	AE57.J1:17	36.1
					I_WCLSmallLowDor	AE57.J1:20	36.1
					I_WclSw	AE55.J2:7	36.1
					B_BatterySaver	.	
					B_EngineRun	.	
AE41.J1:1	O_EntDorStpLb	Entrance Door Step Light Bulb	29.1		D_IndexByte	.	
					I_AccKeySw	A36.JA:11	
					I_EntDorOpSe	AE41.J2:2	29.1
					I_FireExt1stAl	AE44.J2:9	38.1
					I_FireExt2ndAlm	AE44.J2:8	38.1
					I_FireSensorA36	A36.JA:14	
					I_HazardSw	A36.JA:12	
					I_IgnKeySw	AE44.J1:20	3.2
					I_KeylessDrUnl	AE41.J2:9	29.1
					I_KeylessLockAll	AE41.J2:8	29.1
					I_KeylessLuggUnl	AE41.J2:7	29.1
					I_LuggDoorSw	AE43.J1:20	33.1

MULTIPLEX OUTPUT LIST

Module.Pin#	Signal name	Hvac AC Clutch Solenoid	Page	Connected devices	Input involved		
AE41.J1:1	O_EntDorStpLb	Entrance Door Step Light Bulb	29.1		I_ParkBrSe	AE41.J1:17	12.1
					I_WCLDoorLtch	AE57.J1:2	36.1
					I_WCLFirstLatch	AE57.J2:1	36.1
					I_WCLLoDorSe	AE57.J1:17	36.1
					I_WCLSmallLowDor	AE57.J1:20	36.1
					I_WclSw	AE55.J2:7	36.1
					B_EngineRun	.	
AE43.J1:13	O_EntDorULatRly				D_IndexByte	.	
					I_AccKeySw	A36.JA:11	
					I_FireExt1stAl	AE44.J2:9	38.1
					I_FireExt2ndAlm	AE44.J2:8	38.1
					I_FireSensorA36	A36.JA:14	
					I_HazardSw	A36.JA:12	
					I_IgnKeySw	AE44.J1:20	3.2
					I_KeylessDrUnl	AE41.J2:9	29.1
					I_KeylessLockAll	AE41.J2:8	29.1
					I_KeylessLuggUnl	AE41.J2:7	29.1
					I_KlessDrULatch	AE43.J2:5	
					I_ParkBrSe	AE41.J1:17	12.1
					I_WCLDoorLtch	AE57.J1:2	36.1
					I_WCLFirstLatch	AE57.J2:1	36.1
					I_WCLLoDorSe	AE57.J1:17	36.1
					I_WCLSmallLowDor	AE57.J1:20	36.1
					I_WclSw	AE55.J2:7	36.1
					B_EngineRun	.	
AE41.J2:15	O_EntDorUpperPen	Entrance Door Upper Pen	29.1		I_ParkBrSe	AE41.J1:17	12.1
AE54.J1:19	O_EvaSpd1Rel	Evaporator Fan Speed 1 Relay	18.2	R12:2	D_HvacModSig	.	
					I_BatMonMod54	AE54.J1:24	
					I_FireExt1stAl	AE44.J2:9	38.1
					I_FireExt2ndAlm	AE44.J2:8	38.1
					I_FireSensorA36	A36.JA:14	
					I_IgnKeySw	AE44.J1:20	3.2
					B_BatterySaver	.	
					B_EngineRun	.	
					B_LowVoltage	.	
					B_TstModHvac	.	
AE54.J1:1	O_EvaSpd2Pilot	Evaporator Fan Speed 2	18.2		D_AmbTempLSB	.	
					D_AmbTempMSB	.	
					D_HvacModSig	.	
					D_HvacModSig1	.	
					D_HvacModSig2	.	
					D_PassSetPts	.	
					D_SuperHeatAct	.	

MULTIPLEX OUTPUT LIST

Module.Pin#	Signal name	Hvac AC Clutch Solenoid	Page	Connected devices	Input involved		
AE54.J1:1	O_EvaSpd2Pilot	Evaporator Fan Speed 2	18.2		I_BatMonMod54	AE54.J1:24	
					I_FireExt1stAl	AE44.J2:9	38.1
					I_FireExt2ndAlm	AE44.J2:8	38.1
					I_FireSensorA36	A36.JA:14	
					I_IgnKeySw	AE44.J1:20	3.2
					B_BatterySaver	.	
					B_EngineRun	.	
					B_LowVoltage	.	
					B_TstModHvac	.	
AE49.J1:3	O_FanDrvCac1		13.1		D_AmbTempLSB	.	
					D_AmbTempMSB	.	
					D_IndexByte	.	
					I_AltSeLL	AE52.J2:8	1.1
					I_AltSeUL	AE49.J1:20	1.1
					I_AltSeUR	AE52.J2:9	1.1
					I_BatMonMod49	AE49.J1:24	
					I_BatMonMod52	AE52.J1:24	
					I_FireExt1stAl	AE44.J2:9	38.1
					I_RetdrSig	AE50.J1:20	15.1
					B_BatterySaver	.	
					B_EngineRun	.	
					B_TstModHvac	.	
					B_TstModSAC	.	
AE49.J1:1	O_FanDrvCool357		13.1		D_AmbTempLSB	.	
					D_AmbTempMSB	.	
					D_IndexByte	.	
					I_AltSeLL	AE52.J2:8	1.1
					I_AltSeUL	AE49.J1:20	1.1
					I_AltSeUR	AE52.J2:9	1.1
					I_BatMonMod49	AE49.J1:24	
					I_BatMonMod52	AE52.J1:24	
					I_FireExt1stAl	AE44.J2:9	38.1
					I_RetdrSig	AE50.J1:20	15.1
					B_BatterySaver	.	
					B_EngineRun	.	
					B_TstModHvac	.	
					B_TstModSAC	.	
AE52.J1:3	O_FanDrvCool468		13.1		D_AmbTempLSB	.	
					D_AmbTempMSB	.	
					D_IndexByte	.	
					I_AltSeLL	AE52.J2:8	1.1
					I_AltSeUR	AE52.J2:9	1.1
					I_BatMonMod52	AE52.J1:24	

MULTIPLEX OUTPUT LIST

Module.Pin#	Signal name	Hvac AC Clutch Solenoid	Page	Connected devices	Input involved		
AE52.J1:3	O_FanDrvCool468		13.1		I_FireExt1stAl	AE44.J2:9	38.1
					I_RetdrSig	AE50.J1:20	15.1
					B_BatterySaver	.	
					B_EngineRun	.	
					B_TstModHvac	.	
					B_TstModSAC	.	
AE52.J1:13	O_FanRJB	Fan RJB	1.1		D_AmbTempLSB	.	
					D_AmbTempMSB	.	
					I_FireExt1stAl	AE44.J2:9	38.1
					I_FireExt2ndAlm	AE44.J2:8	38.1
					I_FireSensorA36	A36.JA:14	
					I_IgnKeySw	AE44.J1:20	3.2
					B_BatterySaver	.	
					B_EngineRun	.	
					B_TstModHvac	.	
					B_TstModSAC	.	
AE61.J2:4	O_FFlr4MoLower				I_BatMonMod61	AE61.J1:24	
					I_FFlr4FrLimSw	AE61.J2:8	
					I_FFlr4RrLimSw	AE61.J2:9	
					I_IgnKeySw	AE44.J1:20	3.2
					I_Sld4PosFFMoFr	AE61.J2:11	
					I_Sld4PosFFMoRr	AE61.J2:12	
AE61.J2:1	O_FFlr4MoRaise				I_BatMonMod61	AE61.J1:24	
					I_FFlr4FrLimSw	AE61.J2:8	
					I_FFlr4RrLimSw	AE61.J2:9	
					I_IgnKeySw	AE44.J1:20	3.2
					I_Sld4PosFFMoFr	AE61.J2:11	
					I_Sld4PosFFMoRr	AE61.J2:12	
A36.JA:10	O_FireExtR36				D_IndexByte	.	
					I_AccKeySw	A36.JA:11	
					I_FireExt1stAl	AE44.J2:9	38.1
					I_FireExt2ndAlm	AE44.J2:8	38.1
					I_FireSensorA36	A36.JA:14	
					I_HazardSw	A36.JA:12	
					I_HornSw	AE56.J2:7	9.1
					I_IgnKeySw	AE44.J1:20	3.2
					I_KeylessDrUnl	AE41.J2:9	29.1
					I_KeylessIntru	AE41.J2:6	29.1
					I_KeylessLockAll	AE41.J2:8	29.1
					I_KeylessLuggUnl	AE41.J2:7	29.1
					I_KeylessPanic	AE41.J2:5	29.1
					I_LuggDoorSw	AE43.J1:20	33.1
					I_ParkBrSe	AE41.J1:17	12.1

MULTIPLEX OUTPUT LIST

Module.Pin#	Signal name	Hvac AC Clutch Solenoid	Page	Connected devices	Input involved		
A36.JA:10	O_FireExtR36				I_WCLDoorLtch	AE57.J1:2	36.1
					I_WCLFirstLatch	AE57.J2:1	36.1
					I_WCLLoDorSe	AE57.J1:17	36.1
					I_WCLSmallLowDor	AE57.J1:20	36.1
					I_WclSw	AE55.J2:7	36.1
					B_EngineRun	.	
AE52.J1:1	O_FnDrvCac2		13.1		D_AmbTempLSB	.	
					D_AmbTempMSB	.	
					D_IndexByte	.	
					I_AltSeLL	AE52.J2:8	1.1
					I_AltSeUR	AE52.J2:9	1.1
					I_BatMonMod52	AE52.J1:24	
					I_FireExt1stAl	AE44.J2:9	38.1
					I_RetdrSig	AE50.J1:20	15.1
					B_BatterySaver	.	
					B_EngineRun	.	
					B_TstModHvac	.	
					B_TstModSAC	.	
AE45.J2:4	O_FootTrpNSol	Foot Trap Solenoid	18.1		D_HvacModSig	.	
					D_HvacModSig1	.	
					I_IgnKeySw	AE44.J1:20	3.2
AE45.J2:1	O_FootTrpPSol	Foot Trap Solenoid	18.1		D_HvacModSig	.	
					D_HvacModSig1	.	
					I_IgnKeySw	AE44.J1:20	3.2
AE46.J1:10	O_FrClearLb	Front Clearance Lights Bulb	26.1		I_FogLightSw	AE56.J2:5	26.5
					I_HdLtPos1Sw	AE56.J1:17	26.1
					I_HdLtPos2Sw	AE56.J1:5	26.1
					B_BatterySaver	.	
					B_EngineRun	.	
					B_TstModExtLight	.	
AE55.J2:15	O_GateWayPwr		4.1		D_VipSteering1	.	
					I_A55_NormalMode	AE.	
					I_IgnKeySw	AE44.J1:20	3.2
AE44.J1:10	O_HeadLmpWshMo		34.1		I_HeadLmpWshSw	AE56.J1:2	34.1
					I_IgnKeySw	AE44.J1:20	3.2
AE44.J1:16	O_HornSol	Electric Horn	9.1		I_HornSw	AE56.J2:7	9.1
					I_IgnKeySw	AE44.J1:20	3.2
AE55.J1:13	O_HUD	HUD light	16.2	A38:2	I_IgnKeySw	AE44.J1:20	3.2
AE41.J1:19	O_JacobBrk1	Jacob Brake 1	14.1	A81.CN1:21	D_VipSteering1	.	
					D_VipSteering2	.	
					I_A41_NormalMode	AE.	
					I_BrakePedSec	AE41.J1:21	12.1
					I_IgnKeySw	AE44.J1:20	3.2

MULTIPLEX OUTPUT LIST

Module.Pin#	Signal name	Hvac AC Clutch Solenoid	Page	Connected devices	Input involved		
AE41.J1:19	O_JacobBrk1	Jacob Brake 1	14.1	A81.CN1:21	I_LowWiperCam	AE47.J1:20	34.1
					I_LwWipIntSw	AE55.J2:10	34.1
					I_LwWshSw	AE55.J2:11	34.1
					I_RetarderSel	AE55.J2:6	12.1
					I_RetdrSig	AE50.J1:20	15.1
AE41.J1:16	O_JacobBrk2	Jacob Brake 2	14.1	A81.CN1:20	D_VipSteering1	.	
					D_VipSteering2	.	
					I_A41_NormalMode	AE.	
					I_BrakePedSec	AE41.J1:21	12.1
					I_IgnKeySw	AE44.J1:20	3.2
					I_LowWiperCam	AE47.J1:20	34.1
					I_LwWipIntSw	AE55.J2:10	34.1
					I_LwWshSw	AE55.J2:11	34.1
					I_RetarderSel	AE55.J2:6	12.1
					I_RetdrSig	AE50.J1:20	15.1
AE55.J1:10	O_LHCamTrig				I_IgnKeySw	AE44.J1:20	3.2
AE46.J2:1	O_LHCornerLb	Left Hand Cornering Light Bulb	26.5		I_CorneringLtSw	AE56.J2:6	26.5
					I_DockingLtSw	AE56.J2:10	26.5
					I_LHFlshSw	AE46.J1:20	26.1
					I_LowDockLtsSw	AE56.J2:12	26.5
					B_BatterySaver	.	
					B_EngineRun	.	
					B_TstModExtLight	.	
AE50.J1:13	O_LHCtrFlshLb	Water Filter Indicator Warning	26.2		I_HazardSw	A36.JA:12	
					I_IgnKeySw	AE44.J1:20	3.2
					B_TstModExtLight	.	
AE51.J1:1	O_LHDockLb	Left Hand Docking Light Bulb	26.5		I_DockingLtSw	AE56.J2:10	26.5
					I_LowDockLtsSw	AE56.J2:12	26.5
					B_BatterySaver	.	
					B_EngineRun	.	
					B_TstModExtLight	.	
AE46.J1:1	O_LHFogLb1	Left Hand Fog Light Bulb	26.5		I_BatMonMod46	AE46.J1:24	
					I_FogLightSw	AE56.J2:5	26.5
					I_HdLtHiLowBmSw	AE56.J1:21	26.1
					I_HdLtPos2Sw	AE56.J1:5	26.1
					I_HiBeamCallSw	AE56.J1:20	26.1
					B_BatterySaver	.	
					B_EngineRun	.	
					B_TstModExtLight	.	
AE46.J1:13	O_LHFrMkrLb	Left Hand Front Markers Light Bulb	26.1		I_FogLightSw	AE56.J2:5	26.5
					I_HdLtPos1Sw	AE56.J1:17	26.1
					I_HdLtPos2Sw	AE56.J1:5	26.1
					I_KeylessIntru	AE41.J2:6	29.1

MULTIPLEX OUTPUT LIST

Module.Pin#	Signal name	Hvac AC Clutch Solenoid	Page	Connected devices	Input involved		
AE46.J1:13	O_LHFrMkrLb	Left Hand Front Markers Light Bulb	26.1		I_KeylessPanic	AE41.J2:5	29.1
					B_BatterySaver	.	
					B_EngineRun	.	
					B_TstModExtLight	.	
AE46.J2:13	O_LHFrSidFlshLb				I_HazardSw	A36.JA:12	
					I_IgnKeySw	AE44.J1:20	3.2
					I_LHFlshSw	AE46.J1:20	26.1
					I_RHFlshSw	AE48.J2:5	26.1
					B_TstModExtLight	.	
AE46.J2:4	O_LHHiBmLb	Left Hand Hi Beam Light Bulb	26.1		I_BatMonMod46	AE46.J1:24	
					I_FogLightSw	AE56.J2:5	26.5
					I_HdLtHiLowBmSw	AE56.J1:21	26.1
					I_HdLtPos2Sw	AE56.J1:5	26.1
					I_HiBeamCallSw	AE56.J1:20	26.1
					I_ParkBrSe	AE41.J1:17	12.1
					B_EngineRun	.	
					B_TstModExtLight	.	
AE46.J2:7	O_LHLwBmLb	Left Hand Low Beam Light Bulb	26.1		I_BatMonMod46	AE46.J1:24	
					I_HdLtHiLowBmSw	AE56.J1:21	26.1
					I_HdLtPos2Sw	AE56.J1:5	26.1
					I_HiBeamCallSw	AE56.J1:20	26.1
					B_EngineRun	.	
					B_TstModExtLight	.	
AE51.J1:13	O_LHReFlshLb	Left Hand Rear Flasher Light Bulb	26.2		I_HazardSw	A36.JA:12	
					I_IgnKeySw	AE44.J1:20	3.2
					B_TstModExtLight	.	
AE43.J1:1	O_LugLkSol	Luggage Lock Solenoid	33.1		D_IndexByte	.	
					I_AccKeySw	A36.JA:11	
					I_FireExt1stAl	AE44.J2:9	38.1
					I_FireExt2ndAlm	AE44.J2:8	38.1
					I_FireSensorA36	A36.JA:14	
					I_HazardSw	A36.JA:12	
					I_IgnKeySw	AE44.J1:20	3.2
					I_KeylessDrUnl	AE41.J2:9	29.1
					I_KeylessLockAll	AE41.J2:8	29.1
					I_KeylessLuggUnl	AE41.J2:7	29.1
					I_LuggDoorSw	AE43.J1:20	33.1
					I_ParkBrSe	AE41.J1:17	12.1
					I_WCLDoorLtch	AE57.J1:2	36.1
					I_WCLFirstLatch	AE57.J2:1	36.1
					I_WCLLoDorSe	AE57.J1:17	36.1
					I_WCLSmallLowDor	AE57.J1:20	36.1
					I_WclSw	AE55.J2:7	36.1

MULTIPLEX OUTPUT LIST

Module.Pin#	Signal name	Hvac AC Clutch Solenoid	Page	Connected devices	Input involved		
AE43.J1:1	O_LugLkSol	Luggage Lock Solenoid	33.1		B_EngineRun	.	
AE43.J2:1	O_LugLkSol2		33.1		D_IndexByte	.	
					I_AccKeySw	A36.JA:11	
					I_FireExt1stAl	AE44.J2:9	38.1
					I_FireExt2ndAlm	AE44.J2:8	38.1
					I_FireSensorA36	A36.JA:14	
					I_HazardSw	A36.JA:12	
					I_IgnKeySw	AE44.J1:20	3.2
					I_KeylessDrUnl	AE41.J2:9	29.1
					I_KeylessLockAll	AE41.J2:8	29.1
					I_KeylessLuggUnl	AE41.J2:7	29.1
					I_LuggDoorSw	AE43.J1:20	33.1
					I_ParkBrSe	AE41.J1:17	12.1
					I_WCLDoorLtch	AE57.J1:2	36.1
					I_WCLFirstLatch	AE57.J2:1	36.1
					I_WCLLoDorSe	AE57.J1:17	36.1
					I_WCLSmallLowDor	AE57.J1:20	36.1
					I_WclSw	AE55.J2:7	36.1
					B_EngineRun	.	
AE43.J1:3	O_LugULkSol	Luggage Lock Solenoid	33.1		D_IndexByte	.	
					I_AccKeySw	A36.JA:11	
					I_FireExt1stAl	AE44.J2:9	38.1
					I_FireExt2ndAlm	AE44.J2:8	38.1
					I_FireSensorA36	A36.JA:14	
					I_HazardSw	A36.JA:12	
					I_IgnKeySw	AE44.J1:20	3.2
					I_KeylessDrUnl	AE41.J2:9	29.1
					I_KeylessLockAll	AE41.J2:8	29.1
					I_KeylessLuggUnl	AE41.J2:7	29.1
					I_LuggDoorSw	AE43.J1:20	33.1
					I_ParkBrSe	AE41.J1:17	12.1
					I_WCLDoorLtch	AE57.J1:2	36.1
					I_WCLFirstLatch	AE57.J2:1	36.1
					I_WCLLoDorSe	AE57.J1:17	36.1
					I_WCLSmallLowDor	AE57.J1:20	36.1
					I_WclSw	AE55.J2:7	36.1
					B_EngineRun	.	
AE43.J2:4	O_LugULkSol2		33.1		D_IndexByte	.	
					I_AccKeySw	A36.JA:11	
					I_FireExt1stAl	AE44.J2:9	38.1
					I_FireExt2ndAlm	AE44.J2:8	38.1
					I_FireSensorA36	A36.JA:14	
					I_HazardSw	A36.JA:12	

MULTIPLEX OUTPUT LIST

Module.Pin#	Signal name	Hvac AC Clutch Solenoid	Page	Connected devices	Input involved		
AE43.J2:4	O_LugULkSol2		33.1		I_IgnKeySw	AE44.J1:20	3.2
					I_KeylessDrUnl	AE41.J2:9	29.1
					I_KeylessLockAll	AE41.J2:8	29.1
					I_KeylessLuggUnl	AE41.J2:7	29.1
					I_LuggDoorSw	AE43.J1:20	33.1
					I_ParkBrSe	AE41.J1:17	12.1
					I_WCLDoorLtch	AE57.J1:2	36.1
					I_WCLFirstLatch	AE57.J2:1	36.1
					I_WCLLoDorSe	AE57.J1:17	36.1
					I_WCLSmallLowDor	AE57.J1:20	36.1
					I_WclSw	AE55.J2:7	36.1
					B_EngineRun	.	
AE47.J1:7	O_LwWipSpd1	Lower Wiper Speed 1	34.1	R27:86	I_IgnKeySw	AE44.J1:20	3.2
					I_LwWipIntSw	AE55.J2:10	34.1
					I_LwWshSw	AE55.J2:11	34.1
AE44.J1:7	O_LwWshPmp	Lower Wiper Washer Pump	34.1		I_IgnKeySw	AE44.J1:20	3.2
					I_LwWshSw	AE55.J2:11	34.1
AE45.J1:16	O_Mirrors		31.1		I_IgnKeySw	AE44.J1:20	3.2
AE42.J1:10	O_ParkBrSol	Park Brake Solenoid Valve	36.1		D_IndexByte	.	
					I_AccKeySw	A36.JA:11	
					I_FireExt1stAl	AE44.J2:9	38.1
					I_FireExt2ndAlm	AE44.J2:8	38.1
					I_FireSensorA36	A36.JA:14	
					I_HazardSw	A36.JA:12	
					I_IgnKeySw	AE44.J1:20	3.2
					I_ParkBrSe	AE41.J1:17	12.1
					I_WCLDoorLtch	AE57.J1:2	36.1
					I_WCLFirstLatch	AE57.J2:1	36.1
					I_WCLLoDorSe	AE57.J1:17	36.1
					I_WCLSmallLowDor	AE57.J1:20	36.1
					I_WclSw	AE55.J2:7	36.1
					B_EngineRun	.	
AE42.J1:13	O_ParkBrSolNeg	Park Brake Solenoid Return	36.1		D_IndexByte	.	
					I_AccKeySw	A36.JA:11	
					I_FireExt1stAl	AE44.J2:9	38.1
					I_FireExt2ndAlm	AE44.J2:8	38.1
					I_FireSensorA36	A36.JA:14	
					I_HazardSw	A36.JA:12	
					I_IgnKeySw	AE44.J1:20	3.2
					I_ParkBrSe	AE41.J1:17	12.1
					I_WCLDoorLtch	AE57.J1:2	36.1
					I_WCLFirstLatch	AE57.J2:1	36.1
					I_WCLLoDorSe	AE57.J1:17	36.1

MULTIPLEX OUTPUT LIST

Module.Pin#	Signal name	Hvac AC Clutch Solenoid	Page	Connected devices	Input involved		
AE42.J1:13	O_ParkBrSolNeg	Park Brake Solenoid Return	36.1		I_WCLSmallLowDor	AE57.J1:20	36.1
					I_WclSw	AE55.J2:7	36.1
					B_EngineRun	.	
AE54.J2:7	O_PasHeatSol	Passenger Heat Solenoid Valve	18.2		D_AmbTempLSB	.	
					D_AmbTempMSB	.	
					D_HvacModSig	.	
					I_BatMonMod54	AE54.J1:24	
					I_FireExt1stAl	AE44.J2:9	38.1
					I_FireExt2ndAlm	AE44.J2:8	38.1
					I_FireSensorA36	A36.JA:14	
					I_IgnKeySw	AE44.J1:20	3.2
					B_BatterySaver	.	
					B_EngineRun	.	
					B_TstModHvac	.	
AE54.J1:7	O_PasRfgSol	Passenger Refrigerent Solenoid	18.2		D_AmbTempLSB	.	
					D_AmbTempMSB	.	
					D_HvacModSig	.	
					D_HvacModSig1	.	
					D_HvacModSig2	.	
					D_PassSetPts	.	
					D_SuperHeatAct	.	
					I_BatMonMod54	AE54.J1:24	
					I_FireExt1stAl	AE44.J2:9	38.1
					I_FireExt2ndAlm	AE44.J2:8	38.1
					I_FireSensorA36	A36.JA:14	
					I_IgnKeySw	AE44.J1:20	3.2
					B_BatterySaver	.	
					B_EngineRun	.	
					B_LowVoltage	.	
					B_TstModHvac	.	
AE54.J2:13	O_PassHeatVlvCtl				I_BatMonMod54	AE54.J1:24	
					B_BatterySaver	.	
					B_EngineRun	.	
					B_TstModHvac	.	
AE51.J1:10	O_ReTailMkLb	Rear Tail Markers Light Bulb	26.2		I_FogLightSw	AE56.J2:5	26.5
					I_HdLtPos1Sw	AE56.J1:17	26.1
					I_HdLtPos2Sw	AE56.J1:5	26.1
					I_KeylessIntru	AE41.J2:6	29.1
					I_KeylessPanic	AE41.J2:5	29.1
					B_BatterySaver	.	
					B_EngineRun	.	
					B_TstModExtLight	.	
AE49.J2:13	O_RetardEna	Retarder Enable	12.1		D_VipSteering1	.	

MULTIPLEX OUTPUT LIST

Module.Pin#	Signal name	Hvac AC Clutch Solenoid	Page	Connected devices	Input involved		
AE49.J2:13	O_RetardEna	Retarder Enable	12.1		D_VipSteering2	.	
					I_BrakePedSec	AE41.J1:21	12.1
					I_IgnKeySw	AE44.J1:20	3.2
					I_LowWiperCam	AE47.J1:20	34.1
					I_LwWipIntSw	AE55.J2:10	34.1
					I_LwWshSw	AE55.J2:11	34.1
					I_RetarderSel	AE55.J2:6	12.1
					I_RetdrSig	AE50.J1:20	15.1
AE50.J1:7	O_RevAlarm	Back up alarm	26.3		D_NextWheel	.	
					I_RevAlrmSw	AE55.J2:4	26.3
					B_BatterySaver	.	
					B_EngineRun	.	
					B_TestSwBuz2	.	
					B_TestSwBuzzer	.	
					B_TstModExtLight	.	
					B_TstModHvac	.	
					B_TstModHvacNext	.	
					B_TstModSAC	.	
					B_TstModSACNext	.	
					B_TstSwBuz3	.	
AE55.J1:16	O_RHCamTrig				I_IgnKeySw	AE44.J1:20	3.2
AE48.J1:3	O_RHCornerLb	Right Hand Cornering Light Bulb	26.5		I_CorneringLtSw	AE56.J2:6	26.5
					I_DockingLtSw	AE56.J2:10	26.5
					I_LowDockLtsSw	AE56.J2:12	26.5
					I_RHFlshSw	AE48.J2:5	26.1
					B_BatterySaver	.	
					B_EngineRun	.	
					B_TstModExtLight	.	
AE50.J1:19	O_RHCtrFlshLb	Wheel Chair Lift Warning Indicator	26.2		I_HazardSw	A36.JA:12	
					I_IgnKeySw	AE44.J1:20	3.2
					B_TstModExtLight	.	
AE47.J2:4	O_RHDefrostFan	Passenger defrost fan speed control	18.1	A30.A:D	D_HvacModSig	.	
					D_HvacModSig1	.	
					D_HvacModSig2	.	
					D_SuperHeatAct	.	
					I_BatMonMod47	AE47.J1:24	
					I_DefrostHighSw	AE47.J1:21	18.1
					I_DefrostLowSw	AE47.J2:6	18.1
					I_FireExt1stAl	AE44.J2:9	38.1
					I_FireExt2ndAlm	AE44.J2:8	38.1
					I_FireSensorA36	A36.JA:14	
					I_IgnKeySw	AE44.J1:20	3.2
					B_EngineRun	.	

MULTIPLEX OUTPUT LIST

Module.Pin#	Signal name	Hvac AC Clutch Solenoid	Page	Connected devices	Input involved		
AE51.J1:3	O_RHDockLb	Right Hand Docking Light Bulb	26.5		I_DockingLtSw	AE56.J2:10	26.5
					I_LowDockLtsSw	AE56.J2:12	26.5
					B_BatterySaver	.	
					B_EngineRun	.	
					B_TstModExtLight	.	
AE48.J1:1	O_RHFogLb1	Right Hand Fog Light	26.5	L96:A	I_BatMonMod48	AE48.J1:24	
					I_FogLightSw	AE56.J2:5	26.5
					I_HdLtHiLowBmSw	AE56.J1:21	26.1
					I_HdLtPos2Sw	AE56.J1:5	26.1
					I_HiBeamCallSw	AE56.J1:20	26.1
					B_BatterySaver	.	
					B_EngineRun	.	
					B_TstModExtLight	.	
AE48.J1:10	O_RHFrMrkLb	Right Hand Front Markers Light Bulb	26.1		I_FogLightSw	AE56.J2:5	26.5
					I_HdLtPos1Sw	AE56.J1:17	26.1
					I_HdLtPos2Sw	AE56.J1:5	26.1
					I_KeylessIntru	AE41.J2:6	29.1
					I_KeylessPanic	AE41.J2:5	29.1
					B_BatterySaver	.	
					B_EngineRun	.	
					B_TstModExtLight	.	
AE48.J2:13	O_RHFrSidFlshLb	RH Front Side Flasher L-Bulb	26.1	L64:1	I_HazardSw	A36.JA:12	
					I_IgnKeySw	AE44.J1:20	3.2
					I_RHFlshSw	AE48.J2:5	26.1
					B_TstModExtLight	.	
AE48.J2:1	O_RHHiBeamLb	Right Hand Hi Beam Light Bulb	26.1		I_BatMonMod48	AE48.J1:24	
					I_FogLightSw	AE56.J2:5	26.5
					I_HdLtHiLowBmSw	AE56.J1:21	26.1
					I_HdLtPos2Sw	AE56.J1:5	26.1
					I_HiBeamCallSw	AE56.J1:20	26.1
					I_ParkBrSe	AE41.J1:17	12.1
					B_EngineRun	.	
					B_TstModExtLight	.	
AE48.J2:4	O_RHLwBeamLb	Right Hand Low Beam Light Bulb	26.1		I_BatMonMod48	AE48.J1:24	
					I_HdLtHiLowBmSw	AE56.J1:21	26.1
					I_HdLtPos2Sw	AE56.J1:5	26.1
					I_HiBeamCallSw	AE56.J1:20	26.1
					B_EngineRun	.	
					B_TstModExtLight	.	
AE51.J1:4	O_RHReFlshLb	Right Hand Rear Flasher Light Bulb	26.2		I_HazardSw	A36.JA:12	
					I_IgnKeySw	AE44.J1:20	3.2
					B_TstModExtLight	.	
AE51.J1:16	O_SerBrkTrans	Servise Brake Signal For Transmission	15.1	A1:62	I_BrakePedSec	AE41.J1:21	12.1

MULTIPLEX OUTPUT LIST

Module.Pin#	Signal name	Hvac AC Clutch Solenoid	Page	Connected devices	Input involved		
AE44.J1:4	O_ShutDownRly		4.1		D_IndexByte	.	
					I_A44_NormalMode	AE.	
					I_AccKeySw	A36.JA:11	
					I_FireExt1stAl	AE44.J2:9	38.1
					I_FireExt2ndAlm	AE44.J2:8	38.1
					I_FireSensorA36	A36.JA:14	
					I_HazardSw	A36.JA:12	
					I_IgnKeySw	AE44.J1:20	3.2
					I_ParkBrSe	AE41.J1:17	12.1
					I_WCLDoorLtch	AE57.J1:2	36.1
					I_WCLFirstLatch	AE57.J2:1	36.1
					I_WCLLoDorSe	AE57.J1:17	36.1
					I_WCLSmallLowDor	AE57.J1:20	36.1
					I_WclSw	AE55.J2:7	36.1
					B_EngineRun	.	
AE61.J1:19	O_Sld4FFMoClose				I_BatMonMod58	AE58.J1:24	
					I_BatMonMod59	AE59.J1:24	
					I_BatMonMod60	AE60.J1:24	
					I_BatMonMod61	AE61.J1:24	
					I_FFlr4FrLimSw	AE61.J2:8	
					I_FFlr4RrLimSw	AE61.J2:9	
					I_IgnKeySw	AE44.J1:20	3.2
					I_Sld4PosFFMoFr	AE61.J2:11	
					I_Sld4PosFFMoRr	AE61.J2:12	
					I_SldO1LimiOutSw	AE58.J2:9	20.1
					I_SldO1PBrakeSw	AE58.J2:6	20.1
					I_SldO1VacPrSe	AE58.J2:11	20.1
					I_SldO2LimiOutSw	AE59.J2:9	20.2
					I_SldO2PBrakeSw	AE59.J2:6	20.2
					I_SldO3LimiOutSw	AE60.J2:9	
					I_SldO3PBrakeSw	AE60.J2:6	
					I_SldO4CloseSw	AE61.J1:21	
					I_SldO4OpenSw	AE61.J1:20	
					I_SldO4PBrakeSw	AE61.J2:6	
AE61.J1:16	O_Sld4FFMoOpen				I_BatMonMod58	AE58.J1:24	
					I_BatMonMod59	AE59.J1:24	
					I_BatMonMod60	AE60.J1:24	
					I_BatMonMod61	AE61.J1:24	
					I_FFlr4FrLimSw	AE61.J2:8	
					I_FFlr4RrLimSw	AE61.J2:9	
					I_IgnKeySw	AE44.J1:20	3.2
					I_Sld4PosFFMoFr	AE61.J2:11	
					I_Sld4PosFFMoRr	AE61.J2:12	

MULTIPLEX OUTPUT LIST

Module.Pin#	Signal name	Hvac AC Clutch Solenoid	Page	Connected devices	Input involved		
AE61.J1:16	O_Sld4FFMoOpen				I_SldO1LimiOutSw	AE58.J2:9	20.1
					I_SldO1PBrakeSw	AE58.J2:6	20.1
					I_SldO1VacPrSe	AE58.J2:11	20.1
					I_SldO2LimiOutSw	AE59.J2:9	20.2
					I_SldO2PBrakeSw	AE59.J2:6	20.2
					I_SldO3LimiOutSw	AE60.J2:9	
					I_SldO3PBrakeSw	AE60.J2:6	
					I_SldO4CloseSw	AE61.J1:21	
					I_SldO4OpenSw	AE61.J1:20	
					I_SldO4PBrakeSw	AE61.J2:6	
AE58.J1:1	O_SldO1MoSpeedA	Slide-Out 1 Motor Speed Control A	20.1		I_BatMonMod58	AE58.J1:24	
					I_BatMonMod59	AE59.J1:24	
					I_BatMonMod60	AE60.J1:24	
					I_BatMonMod61	AE61.J1:24	
					I_FFlr4FrLimSw	AE61.J2:8	
					I_FFlr4RrLimSw	AE61.J2:9	
					I_IgnKeySw	AE44.J1:20	3.2
					I_Sld4PosFFMoFr	AE61.J2:11	
					I_Sld4PosFFMoRr	AE61.J2:12	
					I_SldO1CloseSw	AE58.J1:21	20.1
					I_SldO1LimiOutSw	AE58.J2:9	20.1
					I_SldO1OpenSw	AE58.J1:20	20.1
					I_SldO1PBrakeSw	AE58.J2:6	20.1
					I_SldO1VacPrSe	AE58.J2:11	20.1
					I_SldO2LimiOutSw	AE59.J2:9	20.2
					I_SldO2PBrakeSw	AE59.J2:6	20.2
					I_SldO3LimiOutSw	AE60.J2:9	
					I_SldO3PBrakeSw	AE60.J2:6	
					I_SldO4PBrakeSw	AE61.J2:6	
AE58.J1:3	O_SldO1MoSpeedB	Slide-Out 1 Motor Speed Control B			I_BatMonMod58	AE58.J1:24	
					I_BatMonMod59	AE59.J1:24	
					I_BatMonMod60	AE60.J1:24	
					I_BatMonMod61	AE61.J1:24	
					I_FFlr4FrLimSw	AE61.J2:8	
					I_FFlr4RrLimSw	AE61.J2:9	
					I_IgnKeySw	AE44.J1:20	3.2
					I_Sld4PosFFMoFr	AE61.J2:11	
					I_Sld4PosFFMoRr	AE61.J2:12	
					I_SldO1CloseSw	AE58.J1:21	20.1
					I_SldO1LimiOutSw	AE58.J2:9	20.1
					I_SldO1OpenSw	AE58.J1:20	20.1
					I_SldO1PBrakeSw	AE58.J2:6	20.1
					I_SldO1VacPrSe	AE58.J2:11	20.1

MULTIPLEX OUTPUT LIST

Module.Pin#	Signal name	Hvac AC Clutch Solenoid	Page	Connected devices	Input involved		
AE58.J1:3	O_SldO1MoSpeedB	Slide-Out 1 Motor Speed Control B			I_SldO2LimiOutSw	AE59.J2:9	20.2
					I_SldO2PBrakeSw	AE59.J2:6	20.2
					I_SldO3LimiOutSw	AE60.J2:9	
					I_SldO3PBrakeSw	AE60.J2:6	
					I_SldO4PBrakeSw	AE61.J2:6	
AE58.J1:16	O_SldO1Motneg	Slide_Out 1 Motor -	20.1	RSO1_1:86	I_BatMonMod58	AE58.J1:24	
					I_BatMonMod59	AE59.J1:24	
					I_BatMonMod60	AE60.J1:24	
					I_BatMonMod61	AE61.J1:24	
					I_FFlr4FrLimSw	AE61.J2:8	
					I_FFlr4RrLimSw	AE61.J2:9	
					I_IgnKeySw	AE44.J1:20	3.2
					I_Sld4PosFFMoFr	AE61.J2:11	
					I_Sld4PosFFMoRr	AE61.J2:12	
					I_SldO1CloseSw	AE58.J1:21	20.1
					I_SldO1LimiOutSw	AE58.J2:9	20.1
					I_SldO1OpenSw	AE58.J1:20	20.1
					I_SldO1PBrakeSw	AE58.J2:6	20.1
					I_SldO1VacPrSe	AE58.J2:11	20.1
					I_SldO2LimiOutSw	AE59.J2:9	20.2
					I_SldO2PBrakeSw	AE59.J2:6	20.2
					I_SldO3LimiOutSw	AE60.J2:9	
					I_SldO3PBrakeSw	AE60.J2:6	
					I_SldO4PBrakeSw	AE61.J2:6	
AE58.J1:19	O_SldO1Motpos	Slide_Out 1 Motor +	20.1	RSO1_2:86	I_BatMonMod58	AE58.J1:24	
					I_BatMonMod59	AE59.J1:24	
					I_BatMonMod60	AE60.J1:24	
					I_BatMonMod61	AE61.J1:24	
					I_FFlr4FrLimSw	AE61.J2:8	
					I_FFlr4RrLimSw	AE61.J2:9	
					I_IgnKeySw	AE44.J1:20	3.2
					I_Sld4PosFFMoFr	AE61.J2:11	
					I_Sld4PosFFMoRr	AE61.J2:12	
					I_SldO1CloseSw	AE58.J1:21	20.1
					I_SldO1LimiOutSw	AE58.J2:9	20.1
					I_SldO1OpenSw	AE58.J1:20	20.1
					I_SldO1VacPrSe	AE58.J2:11	20.1
					I_SldO2LimiOutSw	AE59.J2:9	20.2
					I_SldO2PBrakeSw	AE59.J2:6	20.2
					I_SldO3LimiOutSw	AE60.J2:9	
					I_SldO3PBrakeSw	AE60.J2:6	
					I_SldO4PBrakeSw	AE61.J2:6	
AE58.J1:4	O_SldO1RemoteLed	Slide_Out 1 Remote Led	20.1	SwSo1:2	I_BatMonMod58	AE58.J1:24	

MULTIPLEX OUTPUT LIST

Module.Pin#	Signal name	Hvac AC Clutch Solenoid	Page	Connected devices	Input involved		
AE58.J1:4	O_SldO1RemoteLed	Slide_Out 1 Remote Led	20.1	SwSo1:2	I_IgnKeySw	AE44.J1:20	3.2
					I_SldO1CloseSw	AE58.J1:21	20.1
					I_SldO1LimiOutSw	AE58.J2:9	20.1
					I_SldO1OpenSw	AE58.J1:20	20.1
					I_SldO1PBrakeSw	AE58.J2:6	20.1
					I_SldO1Supply5v	AE58.J2:15	20.1
					I_SldO1VacPrSe	AE58.J2:11	20.1
AE58.J1:10	O_SldO1SealDefSo	Slide_Out 1 Seal Deflating Valve	20.1		I_BatMonMod58	AE58.J1:24	
					I_IgnKeySw	AE44.J1:20	3.2
					I_SldO1PBrakeSw	AE58.J2:6	20.1
AE58.J1:7	O_SldO1SealInfSo	Slide_Out 1 Seal Inflating Valve	20.1		I_SldO1LimiOutSw	AE58.J2:9	20.1
AE58.J2:4	O_SldO1SecuPinSo	Slide-Out 1 Security Pins	20.1		I_SldO1PBrakeSw	AE58.J2:6	20.1
					I_SldO2PBrakeSw	AE59.J2:6	20.2
					I_SldO3PBrakeSw	AE60.J2:6	
					I_SldO4PBrakeSw	AE61.J2:6	
AE58.J2:1	O_SldO1VaccGenSo	Slide_Out 1 Seal Vaccum Generator	20.1		I_BatMonMod58	AE58.J1:24	
					I_BatMonMod59	AE59.J1:24	
					I_BatMonMod60	AE60.J1:24	
					I_BatMonMod61	AE61.J1:24	
					I_IgnKeySw	AE44.J1:20	3.2
					I_SldO1PBrakeSw	AE58.J2:6	20.1
					I_SldO2PBrakeSw	AE59.J2:6	20.2
					I_SldO3PBrakeSw	AE60.J2:6	
					I_SldO4PBrakeSw	AE61.J2:6	
AE59.J1:1	O_SldO2MoSpeedA	Slide-Out 2 Motor Speed Control A	20.2		I_BatMonMod58	AE58.J1:24	
					I_BatMonMod59	AE59.J1:24	
					I_BatMonMod60	AE60.J1:24	
					I_BatMonMod61	AE61.J1:24	
					I_FFlr4FrLimSw	AE61.J2:8	
					I_FFlr4RrLimSw	AE61.J2:9	
					I_IgnKeySw	AE44.J1:20	3.2
					I_Sld4PosFFMoFr	AE61.J2:11	
					I_Sld4PosFFMoRr	AE61.J2:12	
					I_SldO1LimiOutSw	AE58.J2:9	20.1
					I_SldO1PBrakeSw	AE58.J2:6	20.1
					I_SldO1VacPrSe	AE58.J2:11	20.1
					I_SldO2CloseSw	AE59.J1:21	20.2
					I_SldO2LimiOutSw	AE59.J2:9	20.2
					I_SldO2OpenSw	AE59.J1:20	20.2
					I_SldO2PBrakeSw	AE59.J2:6	20.2
					I_SldO3LimiOutSw	AE60.J2:9	
					I_SldO3PBrakeSw	AE60.J2:6	
					I_SldO4PBrakeSw	AE61.J2:6	

MULTIPLEX OUTPUT LIST

Module.Pin#	Signal name	Hvac AC Clutch Solenoid	Page	Connected devices	Input involved		
AE59.J1:3	O_SldO2MoSpeedB	Slide-Out 2 Motor Speed Control B			I_BatMonMod58	AE58.J1:24	
					I_BatMonMod59	AE59.J1:24	
					I_BatMonMod60	AE60.J1:24	
					I_BatMonMod61	AE61.J1:24	
					I_FFlr4FrLimSw	AE61.J2:8	
					I_FFlr4RrLimSw	AE61.J2:9	
					I_IgnKeySw	AE44.J1:20	3.2
					I_Sld4PosFFMoFr	AE61.J2:11	
					I_Sld4PosFFMoRr	AE61.J2:12	
					I_SldO1LimiOutSw	AE58.J2:9	20.1
					I_SldO1PBrakeSw	AE58.J2:6	20.1
					I_SldO1VacPrSe	AE58.J2:11	20.1
					I_SldO2CloseSw	AE59.J1:21	20.2
					I_SldO2LimiOutSw	AE59.J2:9	20.2
					I_SldO2OpenSw	AE59.J1:20	20.2
					I_SldO2PBrakeSw	AE59.J2:6	20.2
					I_SldO3LimiOutSw	AE60.J2:9	
					I_SldO3PBrakeSw	AE60.J2:6	
					I_SldO4PBrakeSw	AE61.J2:6	
AE59.J1:16	O_SldO2Motneg	Slide_Out 2 Motor -	20.2	RSO2_1:86	I_BatMonMod58	AE58.J1:24	
					I_BatMonMod59	AE59.J1:24	
					I_BatMonMod60	AE60.J1:24	
					I_BatMonMod61	AE61.J1:24	
					I_FFlr4FrLimSw	AE61.J2:8	
					I_FFlr4RrLimSw	AE61.J2:9	
					I_IgnKeySw	AE44.J1:20	3.2
					I_Sld4PosFFMoFr	AE61.J2:11	
					I_Sld4PosFFMoRr	AE61.J2:12	
					I_SldO1LimiOutSw	AE58.J2:9	20.1
					I_SldO1PBrakeSw	AE58.J2:6	20.1
					I_SldO1VacPrSe	AE58.J2:11	20.1
					I_SldO2CloseSw	AE59.J1:21	20.2
					I_SldO2LimiOutSw	AE59.J2:9	20.2
					I_SldO2OpenSw	AE59.J1:20	20.2
					I_SldO2PBrakeSw	AE59.J2:6	20.2
					I_SldO3LimiOutSw	AE60.J2:9	
					I_SldO3PBrakeSw	AE60.J2:6	
					I_SldO4PBrakeSw	AE61.J2:6	
AE59.J1:19	O_SldO2Motpos	Slide_Out 2 Motor +	20.2	RSO2_2:86	I_BatMonMod58	AE58.J1:24	
					I_BatMonMod59	AE59.J1:24	
					I_BatMonMod60	AE60.J1:24	
					I_BatMonMod61	AE61.J1:24	
					I_FFlr4FrLimSw	AE61.J2:8	

MULTIPLEX OUTPUT LIST

Module.Pin#	Signal name	Hvac AC Clutch Solenoid	Page	Connected devices	Input involved		
AE59.J1:19	O_SldO2Motpos	Slide_Out 2 Motor +	20.2	RSO2_2:86	I_FFlr4RrLimSw	AE61.J2:9	
					I_IgnKeySw	AE44.J1:20	3.2
					I_Sld4PosFFMoFr	AE61.J2:11	
					I_Sld4PosFFMoRr	AE61.J2:12	
					I_SldO1LimiOutSw	AE58.J2:9	20.1
					I_SldO1PBrakeSw	AE58.J2:6	20.1
					I_SldO1VacPrSe	AE58.J2:11	20.1
					I_SldO2CloseSw	AE59.J1:21	20.2
					I_SldO2LimiOutSw	AE59.J2:9	20.2
					I_SldO2OpenSw	AE59.J1:20	20.2
					I_SldO3LimiOutSw	AE60.J2:9	
					I_SldO3PBrakeSw	AE60.J2:6	
					I_SldO4PBrakeSw	AE61.J2:6	
AE59.J1:4	O_SldO2RemoteLed	Slide_Out 2 Remote Led	20.2	SwSo2:2	I_BatMonMod59	AE59.J1:24	
					I_IgnKeySw	AE44.J1:20	3.2
					I_SldO1VacPrSe	AE58.J2:11	20.1
					I_SldO2CloseSw	AE59.J1:21	20.2
					I_SldO2LimiOutSw	AE59.J2:9	20.2
					I_SldO2OpenSw	AE59.J1:20	20.2
					I_SldO2PBrakeSw	AE59.J2:6	20.2
					I_SldO2Supply5v	AE59.J2:15	20.2
AE59.J1:10	O_SldO2SealDefSo	Slide_Out 2 Seal Deflating Valve	20.2		I_BatMonMod59	AE59.J1:24	
					I_IgnKeySw	AE44.J1:20	3.2
					I_SldO2PBrakeSw	AE59.J2:6	20.2
AE59.J1:7	O_SldO2SealInfSo	Slide_Out 2 Seal Inflating Valve	20.2		I_SldO2LimiOutSw	AE59.J2:9	20.2
AE60.J1:1	O_SldO3MoSpeedA				I_BatMonMod58	AE58.J1:24	
					I_BatMonMod59	AE59.J1:24	
					I_BatMonMod60	AE60.J1:24	
					I_BatMonMod61	AE61.J1:24	
					I_FFlr4FrLimSw	AE61.J2:8	
					I_FFlr4RrLimSw	AE61.J2:9	
					I_IgnKeySw	AE44.J1:20	3.2
					I_Sld4PosFFMoFr	AE61.J2:11	
					I_Sld4PosFFMoRr	AE61.J2:12	
					I_SldO1LimiOutSw	AE58.J2:9	20.1
					I_SldO1PBrakeSw	AE58.J2:6	20.1
					I_SldO1VacPrSe	AE58.J2:11	20.1
					I_SldO2LimiOutSw	AE59.J2:9	20.2
					I_SldO2PBrakeSw	AE59.J2:6	20.2
					I_SldO3CloseSw	AE60.J1:21	
					I_SldO3LimiOutSw	AE60.J2:9	
					I_SldO3OpenSw	AE60.J1:20	
					I_SldO3PBrakeSw	AE60.J2:6	

MULTIPLEX OUTPUT LIST

Module.Pin#	Signal name	Hvac AC Clutch Solenoid	Page	Connected devices	Input involved		
AE60.J1:1	O_SldO3MoSpeedA				I_SldO4PBrakeSw	AE61.J2:6	
AE60.J1:3	O_SldO3MoSpeedB				I_BatMonMod58	AE58.J1:24	
					I_BatMonMod59	AE59.J1:24	
					I_BatMonMod60	AE60.J1:24	
					I_BatMonMod61	AE61.J1:24	
					I_FFlr4FrLimSw	AE61.J2:8	
					I_FFlr4RrLimSw	AE61.J2:9	
					I_IgnKeySw	AE44.J1:20	3.2
					I_Sld4PosFFMoFr	AE61.J2:11	
					I_Sld4PosFFMoRr	AE61.J2:12	
					I_SldO1LimiOutSw	AE58.J2:9	20.1
					I_SldO1PBrakeSw	AE58.J2:6	20.1
					I_SldO1VacPrSe	AE58.J2:11	20.1
					I_SldO2LimiOutSw	AE59.J2:9	20.2
					I_SldO2PBrakeSw	AE59.J2:6	20.2
					I_SldO3CloseSw	AE60.J1:21	
					I_SldO3LimiOutSw	AE60.J2:9	
					I_SldO3OpenSw	AE60.J1:20	
					I_SldO3PBrakeSw	AE60.J2:6	
					I_SldO4PBrakeSw	AE61.J2:6	
AE60.J1:16	O_SldO3Motneg				I_BatMonMod58	AE58.J1:24	
					I_BatMonMod59	AE59.J1:24	
					I_BatMonMod60	AE60.J1:24	
					I_BatMonMod61	AE61.J1:24	
					I_FFlr4FrLimSw	AE61.J2:8	
					I_FFlr4RrLimSw	AE61.J2:9	
					I_IgnKeySw	AE44.J1:20	3.2
					I_Sld4PosFFMoFr	AE61.J2:11	
					I_Sld4PosFFMoRr	AE61.J2:12	
					I_SldO1LimiOutSw	AE58.J2:9	20.1
					I_SldO1PBrakeSw	AE58.J2:6	20.1
					I_SldO1VacPrSe	AE58.J2:11	20.1
					I_SldO2LimiOutSw	AE59.J2:9	20.2
					I_SldO2PBrakeSw	AE59.J2:6	20.2
					I_SldO3CloseSw	AE60.J1:21	
					I_SldO3LimiOutSw	AE60.J2:9	
					I_SldO3OpenSw	AE60.J1:20	
					I_SldO3PBrakeSw	AE60.J2:6	
					I_SldO4PBrakeSw	AE61.J2:6	
AE60.J1:19	O_SldO3Motpos				I_BatMonMod58	AE58.J1:24	
					I_BatMonMod59	AE59.J1:24	
					I_BatMonMod60	AE60.J1:24	
					I_BatMonMod61	AE61.J1:24	

MULTIPLEX OUTPUT LIST

Module.Pin#	Signal name	Hvac AC Clutch Solenoid	Page	Connected devices	Input involved		
AE60.J1:19	O_SldO3Motpos				I_FFlr4FrLimSw	AE61.J2:8	
					I_FFlr4RrLimSw	AE61.J2:9	
					I_IgnKeySw	AE44.J1:20	3.2
					I_Sld4PosFFMoFr	AE61.J2:11	
					I_Sld4PosFFMoRr	AE61.J2:12	
					I_SldO1LimiOutSw	AE58.J2:9	20.1
					I_SldO1PBrakeSw	AE58.J2:6	20.1
					I_SldO1VacPrSe	AE58.J2:11	20.1
					I_SldO2LimiOutSw	AE59.J2:9	20.2
					I_SldO2PBrakeSw	AE59.J2:6	20.2
					I_SldO3CloseSw	AE60.J1:21	
					I_SldO3LimiOutSw	AE60.J2:9	
					I_SldO3OpenSw	AE60.J1:20	
					I_SldO4PBrakeSw	AE61.J2:6	
AE60.J1:4	O_SldO3RemoteLed				I_BatMonMod60	AE60.J1:24	
					I_IgnKeySw	AE44.J1:20	3.2
					I_SldO1VacPrSe	AE58.J2:11	20.1
					I_SldO3CloseSw	AE60.J1:21	
					I_SldO3LimiOutSw	AE60.J2:9	
					I_SldO3OpenSw	AE60.J1:20	
					I_SldO3PBrakeSw	AE60.J2:6	
					I_SldO3Supply5v	AE60.J2:15	
AE60.J1:10	O_SldO3SealDefSo				I_BatMonMod60	AE60.J1:24	
					I_IgnKeySw	AE44.J1:20	3.2
					I_SldO3PBrakeSw	AE60.J2:6	
AE60.J1:7	O_SldO3SealInfSo				I_SldO3LimiOutSw	AE60.J2:9	
AE61.J1:4	O_SldO4RemoteLed				I_BatMonMod61	AE61.J1:24	
					I_FFlr4FrLimSw	AE61.J2:8	
					I_FFlr4RrLimSw	AE61.J2:9	
					I_IgnKeySw	AE44.J1:20	3.2
					I_Sld4PosFFMoFr	AE61.J2:11	
					I_Sld4PosFFMoRr	AE61.J2:12	
					I_SldO1VacPrSe	AE58.J2:11	20.1
					I_SldO4CloseSw	AE61.J1:21	
					I_SldO4OpenSw	AE61.J1:20	
					I_SldO4PBrakeSw	AE61.J2:6	
AE61.J1:10	O_SldO4SealDefSo				I_BatMonMod61	AE61.J1:24	
					I_IgnKeySw	AE44.J1:20	3.2
					I_SldO4PBrakeSw	AE61.J2:6	
AE61.J1:7	O_SldO4SealInfSo				I_BatMonMod61	AE61.J1:24	
					I_FFlr4FrLimSw	AE61.J2:8	
					I_FFlr4RrLimSw	AE61.J2:9	
					I_IgnKeySw	AE44.J1:20	3.2

MULTIPLEX OUTPUT LIST

Module.Pin#	Signal name	Hvac AC Clutch Solenoid	Page	Connected devices	Input involved		
AE61.J1:7	O_SldO4SealInfSo				I_Sld4PosFFMoFr	AE61.J2:11	
					I_Sld4PosFFMoRr	AE61.J2:12	
AE52.J1:10	O_StarterRel	Starter Relay	3.2		I_EngDoorSe	AE52.J2:6	25.1
					I_EngStaRrSw	AE52.J2:5	3.2
					I_FireExt1stAl	AE44.J2:9	38.1
					I_FireExt2ndAlm	AE44.J2:8	38.1
					I_FireSensorA36	A36.JA:14	
					I_FrEngStaSw	AE44.J1:21	3.2
					I_IgnKeySw	AE44.J1:20	3.2
					I_StartEna1	AE52.J1:20	3.2
					I_StartEna2	AE41.J1:5	3.2
					B_BatterySaver	.	
					B_EngineRun	.	
					B_TstModHvac	.	
AE44.J2:13	O_SunVisorDrNMO		41.1		D_VipSteering1	.	
					D_VipSteering2	.	
					I_A44_NormalMode	AE.	
					I_IgnKeySw	AE44.J1:20	3.2
					I_SunVisorDrv	AE44.J2:5	41.1
					I_SunVisorPass	AE44.J2:6	41.1
AE44.J2:10	O_SunVisorDrPMO		41.1		D_VipSteering1	.	
					D_VipSteering2	.	
					I_A44_NormalMode	AE.	
					I_IgnKeySw	AE44.J1:20	3.2
					I_SunVisorDrv	AE44.J2:5	41.1
					I_SunVisorPass	AE44.J2:6	41.1
AE44.J2:4	O_SunVisorPsNMO		41.1		D_VipSteering1	.	
					D_VipSteering2	.	
					I_A44_NormalMode	AE.	
					I_IgnKeySw	AE44.J1:20	3.2
					I_SunVisorDrv	AE44.J2:5	41.1
					I_SunVisorPass	AE44.J2:6	41.1
AE44.J2:1	O_SunVisorPsPMO		41.1		D_VipSteering1	.	
					D_VipSteering2	.	
					I_A44_NormalMode	AE.	
					I_IgnKeySw	AE44.J1:20	3.2
					I_SunVisorDrv	AE44.J2:5	41.1
					I_SunVisorPass	AE44.J2:6	41.1
AE43.J1:7	O_TPMSEcu		39.1		D_IndexByte	.	
					I_AccKeySw	A36.JA:11	
					I_FireExt1stAl	AE44.J2:9	38.1
					I_FireExt2ndAlm	AE44.J2:8	38.1
					I_FireSensorA36	A36.JA:14	

MULTIPLEX OUTPUT LIST

Module.Pin#	Signal name	Hvac AC Clutch Solenoid	Page	Connected devices	Input involved		
AE43.J1:7	O_TPMSEcu		39.1		I_HazardSw	A36.JA:12	
					I_IgnKeySw	AE44.J1:20	3.2
					I_ParkBrSe	AE41.J1:17	12.1
					I_WCLDoorLtch	AE57.J1:2	36.1
					I_WCLFirstLatch	AE57.J2:1	36.1
					I_WCLLoDorSe	AE57.J1:17	36.1
					I_WCLSmallLowDor	AE57.J1:20	36.1
					I_WclSw	AE55.J2:7	36.1
					B_EngineRun	.	
AE51.J2:4	O_TransInhibit	Transmission Inhibit	15.1	A1:1	D_IndexByte	.	
					I_AccKeySw	A36.JA:11	
					I_BatMonMod61	AE61.J1:24	
					I_BrakePedPri	AE51.J1:21	12.1
					I_BrakePedSec	AE41.J1:21	12.1
					I_FFlr4FrLimSw	AE61.J2:8	
					I_FFlr4RrLimSw	AE61.J2:9	
					I_FireExt1stAl	AE44.J2:9	38.1
					I_FireExt2ndAlm	AE44.J2:8	38.1
					I_FireSensorA36	A36.JA:14	
					I_HazardSw	A36.JA:12	
					I_IgnKeySw	AE44.J1:20	3.2
					I_ParkBrSe	AE41.J1:17	12.1
					I_Sld4PosFFMoFr	AE61.J2:11	
					I_Sld4PosFFMoRr	AE61.J2:12	
					I_WCLDoorLtch	AE57.J1:2	36.1
					I_WCLFirstLatch	AE57.J2:1	36.1
					I_WCLLoDorSe	AE57.J1:17	36.1
					I_WCLSmallLowDor	AE57.J1:20	36.1
					I_WclSw	AE55.J2:7	36.1
					B_EngineRun	.	
AE44.J1:19	O_UdrFlrLed	Under Floor Light led	25.1		I_AccKeySw	A36.JA:11	
					I_IgnKeySw	AE44.J1:20	3.2
AE45.J1:4	O_VarSteeringPw		4.1		I_IgnKeySw	AE44.J1:20	3.2
A36.JA:7	O_WakeUp	WakeUp Relay			D_IndexByte	.	
					I_AccKeySw	A36.JA:11	
					I_FireExt1stAl	AE44.J2:9	38.1
					I_FireExt2ndAlm	AE44.J2:8	38.1
					I_FireSensorA36	A36.JA:14	
					I_HazardSw	A36.JA:12	
					I_IgnKeySw	AE44.J1:20	3.2
					I_ParkBrSe	AE41.J1:17	12.1
					I_WCLDoorLtch	AE57.J1:2	36.1
					I_WCLFirstLatch	AE57.J2:1	36.1

MULTIPLEX OUTPUT LIST

Module.Pin#	Signal name	Hvac AC Clutch Solenoid	Page	Connected devices	Input involved		
A36.JA:7	O_WakeUp	WakeUp Relay			I_WCLLoDorSe	AE57.J1:17	36.1
					I_WCLSmallLowDor	AE57.J1:20	36.1
					I_WclSw	AE55.J2:7	36.1
					B_EngineRun	.	
AE.	O_WakeUpMcmOnly				D_IndexByte	.	
					I_AccKeySw	A36.JA:11	
					I_FireExt1stAl	AE44.J2:9	38.1
					I_FireExt2ndAlm	AE44.J2:8	38.1
					I_FireSensorA36	A36.JA:14	
					I_HazardSw	A36.JA:12	
					I_IgnKeySw	AE44.J1:20	3.2
					I_KeylessDrUnl	AE41.J2:9	29.1
					I_KeylessIntru	AE41.J2:6	29.1
					I_KeylessLockAll	AE41.J2:8	29.1
					I_KeylessLuggUnl	AE41.J2:7	29.1
					I_KeylessPanic	AE41.J2:5	29.1
					I_ParkBrSe	AE41.J1:17	12.1
					I_WCLDoorLtch	AE57.J1:2	36.1
					I_WCLFirstLatch	AE57.J2:1	36.1
					I_WCLLoDorSe	AE57.J1:17	36.1
					I_WCLSmallLowDor	AE57.J1:20	36.1
					I_WclSw	AE55.J2:7	36.1
					B_EngineRun	.	
AE57.J1:10	O_WCLLatchSol	Wcl pneumatic latch solenoid			I_IgnKeySw	AE44.J1:20	3.2
					I_WCLFirstLatch	AE57.J2:1	36.1
AE57.J1:1	O_WCLOn	Wheel Chair Lift Enabled	36.1		D_IndexByte	.	
					I_AccKeySw	A36.JA:11	
					I_FireExt1stAl	AE44.J2:9	38.1
					I_FireExt2ndAlm	AE44.J2:8	38.1
					I_FireSensorA36	A36.JA:14	
					I_HazardSw	A36.JA:12	
					I_IgnKeySw	AE44.J1:20	3.2
					I_ParkBrSe	AE41.J1:17	12.1
					I_WCLDoorLtch	AE57.J1:2	36.1
					I_WCLFirstLatch	AE57.J2:1	36.1
					I_WCLLoDorSe	AE57.J1:17	36.1
					I_WCLSmallLowDor	AE57.J1:20	36.1
					I_WclSw	AE55.J2:7	36.1
					B_EngineRun	.	
AE51.J1:19	O_WCLSDoorLb		36.1		I_IgnKeySw	AE44.J1:20	3.2
					I_ParkBrSe	AE41.J1:17	12.1
					I_WCLDoorLtch	AE57.J1:2	36.1
					I_WCLFirstLatch	AE57.J2:1	36.1

MULTIPLEX OUTPUT LIST

Module.Pin#	Signal name	Hvac AC Clutch Solenoid	Page	Connected devices	Input involved		
AE57.J1:19	O_WCLSePwr		36.1		D_IndexByte	.	
					I_AccKeySw	A36.JA:11	
					I_FireExt1stAl	AE44.J2:9	38.1
					I_FireExt2ndAlm	AE44.J2:8	38.1
					I_FireSensorA36	A36.JA:14	
					I_HazardSw	A36.JA:12	
					I_IgnKeySw	AE44.J1:20	3.2
					I_ParkBrSe	AE41.J1:17	12.1
					I_WCLDoorLtch	AE57.J1:2	36.1
					I_WCLFirstLatch	AE57.J2:1	36.1
					I_WCLLoDorSe	AE57.J1:17	36.1
					I_WCLSmallLowDor	AE57.J1:20	36.1
					I_WclSw	AE55.J2:7	36.1
					B_EngineRun	.	
AE57.J1:3	O_WCLUpDoorSig	WCL Upper Door Open Signal For TWU	36.1		I_IgnKeySw	AE44.J1:20	3.2
					I_ParkBrSe	AE41.J1:17	12.1
					I_WCLDoorLtch	AE57.J1:2	36.1
					I_WCLFirstLatch	AE57.J2:1	36.1
AE45.J2:13	O_WdowDrvDwMo	Window driver up motor	30.1		I_IgnKeySw	AE44.J1:20	3.2
					I_WdowDrvSw	AE56.J2:9	30.1
AE45.J2:7	O_WdowDrvUpMo	Window driver up motor	30.1		I_IgnKeySw	AE44.J1:20	3.2
					I_WdowDrvSw	AE56.J2:9	30.1

MULTIPLEX INPUT LIST

O_xx... = Physical Ouput Pin ; I_xx... = Physical Input Pin ; D_xx... = CAN Network Signal from the HVAC control Head ; B_xx.. = Multiplex system global Network Variable

Module.Pin#	Signal name	Description	Page	Connected devices
.	I_A41_NormalMode			
.	I_A43_NormalMode			
.	I_A44_NormalMode			
.	I_A55_NormalMode			
.	I_A56NormalMode			
A36.JB:1	I_StartEna2		3.2	
A36.JB:13	I_BrakePedSec		12.1	
A36.JB:2	I_IgnKeySw	Ignition Key switch	3.2	
A36.JB:21	I_FireExt2ndAlm		38.1	
A36.JB:22	I_FrEngStaSw	Front Engine Start Switch	3.2	
A36.JB:23	I_FireExt1stAl		38.1	
A36.JB:4	I_HazardSw	Hazard Switch	26.1	
A36.JB:5	I_FireSensorA36	Fire Sensor On A36	38.1	
A36.JB:6	I_AccKeySw	Accessories Key switch	3.2	
A36.JB:9	I_ParkBrSe	Paking Brake Sensor	12.1	
A41.J2:2	I_EntDorOpSe	Entrance Door Open Sensor		
A41.J2:3	I_EntDorLockSw	VIP Entrance Door Lock Switch		
A41.J2:4	I_LuggDrOpenSe	Luggages doors open sensor		
A41.J2:5	I_KeylessPanic	Keyless panic button signal		
A41.J2:6	I_KeylessIntru	Keyless intrusion signal		
A41.J2:7	I_KeylessLuggUnl	Keyless luggages doors unlock signal		
A41.J2:8	I_KeylessLockAll	Keyless lock all doors signal		
A41.J2:9	I_KeylessDrUnl	Keyless door unlock signal		
A42.J1:20	I_TgAxlSw	Tag Axle Switch		
A42.J2:11	I_LevelLowSw	Level low switch		
A43.J1:20	I_LuggDoorSw	Luggage Door Switch		
A43.J2:6	I_LuggDrLkSe			
A44.J2:5	I_SunVisorDrv	sun visor drv sw		
A44.J2:6	I_SunVisorPass	sun visor pass sw		
A46.J1:20	I_LHFlshSw	Left Hand Flasher Switch		
A46.J1:24	I_BatMonMod46			
A47.J1:21	I_DefrostHighSw	Passenger defrost speed increase switch		
A47.J1:24	I_BatMonMod47			
A47.J2:11	I_DrvTempSe	Driver Temperature sensor		
A47.J2:6	I_DefrostLowSw	Passenger defrost speed decrease switch		
A47.J2:9	I_SAcSuperHeatSe			
A48.J1:24	I_BatMonMod48			
A48.J2:5	I_RHFlshSw	Right Hand Flasher Switch		
A49.J1:20	I_AltSeUL			
A49.J1:24	I_BatMonMod49			
A49.J2:8	I_WdoOpenSe	Passenger Window Open Sensor		
A50.J1:20	I_RetdrSig	Retarder Signal		
A51.J1:20	I_LHFlshSwRrSig	LH FlasherSwitch Rear Signal		

MULTIPLEX INPUT LIST

O_xx... = Physical Ouput Pin ; I_xx... = Physical Input Pin ; D_xx... = CAN Network Signal from the HVAC control Head ; B_xx.. = Multiplex system global Network Variable

Module.Pin#	Signal name	Description	Page	Connected devices
A51.J1:21	I_BrakePedPri			
A51.J2:5	I_RHFlshSwRrSig	RH FlasherSwitch Rear Signal		
A52.J1:20	I_StartEna1			
A52.J1:24	I_BatMonMod52			
A52.J2:5	I_EngStaRrSw	Engine Start Rear Switch		
A52.J2:6	I_EngDoorSe	Engine Door Sensor		
A52.J2:8	I_AltSeLL			
A52.J2:9	I_AltSeUR			
A54.J1:24	I_BatMonMod54			
A54.J2:11	I_SuperHeatSe			
A54.J2:9	I_AcPresLoSSe	Ac Pressure Low Side Sensor		
A55.J2:1	I_DrvLtSw	Driver Light Switch		
A55.J2:10	I_LwWipIntSw	Lower Wiper Intermitant Switch		
A55.J2:11	I_LwWshSw	Lower Wiper Washer Switch		
A55.J2:12	I_UpWipIntSw	Upper Wiper Intermitant Switch		
A55.J2:13	I_UpWipSw	Upper Wiper Switch		
A55.J2:4	I_RevAlrmSw	Reverse alarm switch		
A55.J2:6	I_RetarderSel	Retarder Selected		
A55.J2:7	I_LowDockLtsSw	Low docking lights switch		
A55.J2:8	I_BackUpCamSw	Back up camera switch		
A55.J2:9	I_UpWshSw	Upper Washer Wiper Switch		
A56.J1:17	I_HdLtPos1Sw	Head Light Switch Position Markers		
A56.J1:2	I_HeadLmpWshSw			
A56.J1:20	I_HiBeamCallSw	Hi/Low Beam Switch		
A56.J1:21	I_HdLtHiLowBmSw	Head Lights High and Low Beam Switch		
A56.J1:5	I_HdLtPos2Sw			
A56.J2:10	I_DockingLtSw	Docking Lights Switch		
A56.J2:13	I_EntDorWdo			
A56.J2:3	I_LHFlshSwLHom			
A56.J2:4	I_RHFlshSwLHom			
A56.J2:5	I_FogLightSw	Fog Lights Switch		
A56.J2:6	I_CorneringLtSw	Cornering Light Switch		
A56.J2:7	I_HornSw	Horn Switch		
A56.J2:9	I_WdowDrvSw			
A58.J1:20	I_SldO1OpenSw	Slide-Out 1 Open Sw		
A58.J1:21	I_SldO1CloseSw	Slide-Out 1 Close Sw		
A58.J1:24	I_BatMonMod58			
A58.J2:11	I_SldO1VacPrSe	Slide-Out 1 Vaccum Pressure Transducer		
A58.J2:15	I_SldO1Supply5v	Slide Out 1 5v Supply		
A58.J2:6	I_SldO1PBrakeSw	Slide-Out 1 Parking Brake Sw		
A58.J2:9	I_SldO1LimiOutSw	Slide-Out 1 Limit Out Detection Sw		
A59.J1:20	I_SldO2OpenSw	Slide-Out 2 Open Sw		
A59.J1:21	I_SldO2CloseSw	Slide-Out 2 Close Sw		

MULTIPLEX INPUT LIST

O_xx... = Physical Ouput Pin ; I_xx... = Physical Input Pin ; D_xx... = CAN Network Signal from the HVAC control Head ; B_xx.. = Multiplex system global Network Variable

Module.Pin#	Signal name	Description	Page	Connected devices
A59.J1:24	I_BatMonMod59			
A59.J2:15	I_SldO2Supply5v	Slide Out 2 5v Supply		
A59.J2:6	I_SldO2PBrakeSw	Slide-Out 2 Parking Brake Sw		
A59.J2:9	I_SldO2LimiOutSw	Slide-Out 2 Limit Out Detection Sw		
A60.J1:20	I_SldO3OpenSw			
A60.J1:21	I_SldO3CloseSw			
A60.J1:24	I_BatMonMod60			
A60.J2:15	I_SldO3Supply5v			
A60.J2:6	I_SldO3PBrakeSw			
A60.J2:9	I_SldO3LimiOutSw			
A61.J1:20	I_SldO4OpenSw			
A61.J1:21	I_SldO4CloseSw			
A61.J1:24	I_BatMonMod61			
A61.J2:11	I_Sld4PosFFMoFr			
A61.J2:12	I_Sld4PosFFMoRr			
A61.J2:6	I_SldO4PBrakeSw			
A61.J2:8	I_FFlr4FrLimSw			
A61.J2:9	I_FFlr4RrLimSw			

MULTIPLEX INTPUT LIST

Module.Pin#	Signal name	Hvac AC Clutch Solenoid	Page	Connected devices
A36.JA:11	I_AccKeySw	Accessories Key switch		
A36.JA:12	I_HazardSw	Hazard Switch		
A36.JA:14	I_FireSensorA36	Fire Sensor On A36		
AE.	I_A41_NormalMode			
AE.	I_A43_NormalMode			
AE.	I_A44_NormalMode			
AE.	I_A55_NormalMode			
AE.	I_A56NormalMode			
AE41.J1:17	I_ParkBrSe	Paking Brake Sensor	12.1	
AE41.J1:21	I_BrakePedSec		12.1	
AE41.J1:5	I_StartEna2		3.2	
AE41.J2:11	I_FrSrvCptOpenSe			
AE41.J2:2	I_EntDorOpSe	Entrance Door Open Sensor	29.1	
AE41.J2:3	I_EntDorLockSw	VIP Entrance Door Lock Switch	29.1	
AE41.J2:4	I_LuggDrOpenSe	Luggages doors open sensor	25.1	
AE41.J2:5	I_KeylessPanic	Keyless panic button signal	29.1	
AE41.J2:6	I_KeylessIntru	Keyless intrusion signal	29.1	
AE41.J2:7	I_KeylessLuggUnl	Keyless luggages doors unlock signal	29.1	
AE41.J2:8	I_KeylessLockAll	Keyless lock all doors signal	29.1	
AE41.J2:9	I_KeylessDrUnl	Keyless door unlock signal	29.1	
AE42.J1:20	I_TgAxlSw	Tag Axle Switch	32.1	
AE42.J2:11	I_LevelLowSw	Level low switch	32.1	
AE43.J1:20	I_LuggDoorSw	Luggage Door Switch	33.1	
AE43.J2:5	I_KlessDrULatch			
AE43.J2:6	I_LuggDrLkSe		33.2	
AE44.J1:20	I_IgnKeySw	Ignition Key switch	3.2	
AE44.J1:21	I_FrEngStaSw	Front Engine Start Switch	3.2	
AE44.J2:5	I_SunVisorDrv	sun visor drv sw	41.1	
AE44.J2:6	I_SunVisorPass	sun visor pass sw	41.1	
AE44.J2:8	I_FireExt2ndAlm		38.1	
AE44.J2:9	I_FireExt1stAl		38.1	
AE46.J1:20	I_LHFlshSw	Left Hand Flasher Switch	26.1	
AE46.J1:24	I_BatMonMod46			
AE47.J1:20	I_LowWiperCam	Low wiper Cam	34.1	
AE47.J1:21	I_DefrostHighSw	Passenger defrost speed increase switch	18.1	Sw122:3
AE47.J1:24	I_BatMonMod47			
AE47.J2:11	I_DrvTempSe	Driver Temperature sensor	18.1	
AE47.J2:6	I_DefrostLowSw	Passenger defrost speed decrease switch	18.1	Sw122:1
AE47.J2:9	I_SAcSuperHeatSe		18.3	
AE48.J1:24	I_BatMonMod48			
AE48.J2:5	I_RHFlshSw	Right Hand Flasher Switch	26.1	
AE49.J1:20	I_AltSeUL		1.1	
AE49.J1:24	I_BatMonMod49			

MULTIPLEX INTPUT LIST

Module.Pin#	Signal name	Hvac AC Clutch Solenoid	Page	Connected devices
AE49.J2:8	I_WdoOpenSe	Passenger Window Open Sensor	27.1	
AE49.J2:9	I_RJBLtSw	Rear Junction Light Switch		
AE50.J1:20	I_RetdrSig	Retarder Signal	15.1	A1:24
AE50.J1:24	I_BatMonMod50			
AE51.J1:20	I_LHFlshSwRrSig	LH FlasherSwitch Rear Signal	26.2	
AE51.J1:21	I_BrakePedPri		12.1	
AE51.J1:24	I_BatMonMod51			
AE51.J2:5	I_RHFlshSwRrSig	RH FlasherSwitch Rear Signal	26.2	
AE52.J1:20	I_StartEna1		3.2	
AE52.J1:24	I_BatMonMod52			
AE52.J2:5	I_EngStaRrSw	Engine Start Rear Switch	3.2	
AE52.J2:6	I_EngDoorSe	Engine Door Sensor	25.1	
AE52.J2:8	I_AltSeLL		1.1	
AE52.J2:9	I_AltSeUR		1.1	
AE54.J1:20	I_AcDorOpSe	Condensor Door Open Switch		
AE54.J1:24	I_BatMonMod54			
AE54.J2:11	I_SuperHeatSe		18.2	Se24:3
AE54.J2:8	I_AcPresHiSSe	Ac Pressure High Side Sensor	18.2	
AE54.J2:9	I_AcPresLoSSe	Ac Pressure Low Side Sensor	18.2	Se24:2
AE55.J1:21	I_DimmerSw	Dash BackLighting	19.1	Sw161:5B
AE55.J2:1	I_DrvLtSw	Driver Light Switch	19.1	D83.A:1
AE55.J2:10	I_LwWipIntSw	Lower Wiper Intermitant Switch	34.1	Sw1.C258:7
AE55.J2:11	I_LwWshSw	Lower Wiper Washer Switch	34.1	Sw1.C258:6
AE55.J2:4	I_RevAlrmSw	Reverse alarm switch	26.3	
AE55.J2:6	I_RetarderSel	Retarder Selected	12.1	Sw16:3
AE55.J2:7	I_WclSw	Wheel Chair Lift Dash Switch	36.1	Sw20:3
AE55.J2:8	I_BackUpCamSw	Back up camera switch		
AE56.J1:17	I_HdLtPos1Sw	Head Light Switch Position Markers	26.1	
AE56.J1:2	I_HeadLmpWshSw		34.1	Sw6:4
AE56.J1:20	I_HiBeamCallSw	Hi/Low Beam Switch	26.1	Sw1.C259:4
AE56.J1:21	I_HdLtHiLowBmSw	Head Lights High and Low Beam Switch	26.1	Sw1.C258:8
AE56.J1:5	I_HdLtPos2Sw		26.1	Sw2:6
AE56.J2:10	I_DockingLtSw	Docking Lights Switch	26.5	Sw99:3
AE56.J2:12	I_LowDockLtsSw	Low docking lights switch	26.5	Sw102:3
AE56.J2:13	I_EntDorWdo		30.1	Sw34:2B
AE56.J2:3	I_LHFlshSwLHom		26.1	
AE56.J2:4	I_RHFlshSwLHom		26.1	
AE56.J2:5	I_FogLightSw	Fog Lights Switch	26.5	Sw3:3
AE56.J2:6	I_CorneringLtSw	Cornering Light Switch	26.5	Sw99:1
AE56.J2:7	I_HornSw	Horn Switch	9.1	
AE56.J2:9	I_WdowDrvSw		30.1	
AE57.J1:17	I_WCLLoDorSe	Wheel Chair Lift Lower Door Sensor	36.1	Sw46A.A:1
AE57.J1:2	I_WCLDoorLtch	WCL Door firts latch detection door open	36.1	

MULTIPLEX INTPUT LIST

Module.Pin#	Signal name	Hvac AC Clutch Solenoid	Page	Connected devices
AE57.J1:20	I_WCLSmallLowDor	Wheel Chair Lift Small Low Door	36.1	
AE57.J1:21	I_WCLInstalSig	WCL Cassette installation detection	36.1	
AE57.J2:1	I_WCLFirstLatch	Wcl pneumatic latch sensor	36.1	
AE58.J1:20	I_SldO1OpenSw	Slide-Out 1 Open Sw	20.1	SwSo1:5
AE58.J1:21	I_SldO1CloseSw	Slide-Out 1 Close Sw	20.1	SwSo1:4
AE58.J1:24	I_BatMonMod58			
AE58.J2:11	I_SldO1VacPrSe	Slide-Out 1 Vaccum Pressure Transducer	20.1	SESO1:C
AE58.J2:15	I_SldO1Supply5v	Slide Out 1 5v Supply	20.1	
AE58.J2:6	I_SldO1PBrakeSw	Slide-Out 1 Parking Brake Sw	20.1	
AE58.J2:9	I_SldO1LimiOutSw	Slide-Out 1 Limit Out Detection Sw	20.1	SESO2_SESO3:2
AE59.J1:20	I_SldO2OpenSw	Slide-Out 2 Open Sw	20.2	SwSo2:5
AE59.J1:21	I_SldO2CloseSw	Slide-Out 2 Close Sw	20.2	SwSo2:4
AE59.J1:24	I_BatMonMod59			
AE59.J2:15	I_SldO2Supply5v	Slide Out 2 5v Supply	20.2	SESO5_SESO6:3
AE59.J2:6	I_SldO2PBrakeSw	Slide-Out 2 Parking Brake Sw	20.2	
AE59.J2:9	I_SldO2LimiOutSw	Slide-Out 2 Limit Out Detection Sw	20.2	SESO5_SESO6:2
AE60.J1:20	I_SldO3OpenSw			
AE60.J1:21	I_SldO3CloseSw			
AE60.J1:24	I_BatMonMod60			
AE60.J2:15	I_SldO3Supply5v			
AE60.J2:6	I_SldO3PBrakeSw			
AE60.J2:9	I_SldO3LimiOutSw			
AE61.J1:20	I_SldO4OpenSw			
AE61.J1:21	I_SldO4CloseSw			
AE61.J1:24	I_BatMonMod61			
AE61.J2:11	I_Sld4PosFFMoFr			
AE61.J2:12	I_Sld4PosFFMoRr			
AE61.J2:6	I_SldO4PBrakeSw			
AE61.J2:8	I_FFlr4FrLimSw			
AE61.J2:9	I_FFlr4RrLimSw			

MULTIPLEX ERROR MESSAGES LIST

FMI 3 = Shorted High ; FMI 4 = Shorted Low ; FMI 5 = Open Circuit ; FMI 6 = Current above Normal

Cluster message	SID/PSID	FMI	Module.Pin#	Page	Cluster message	SID/PSID	FMI	Module.Pin#	Page
A/C Pres LoSd	PSID #13	3, 4, 5	A54.J2:9		LH Docking Light	PSID #122	3, 4, 6	A51.J1:1	
Aux AC fan	SID #39	3, 4, 6	A46.J2:10		Low Beam LH	PSID #142	3, 4, 5, 6	A46.J2:7	
Aux Refr sol	SID #46	3, 4, 6	A46.J1:19		Low Beam RH	PSID #146	3, 4, 5, 6	A48.J2:4	
Backup Light &	PSID #167	3, 4, 6	A50.J2:10		Lower Washer pmp	PSID #181	4, 5, 6	A44.J1:7	
Ceiling Door Lt	PSID #108	3, 4, 6	A41.J1:7		Lower Washer Sw	PSID #188	3, 4	A55.J2:11	
Center Flash LH	PSID #124	3, 4, 6	A50.J1:13		Lower Wip Int	PSID #183	3, 4	A55.J2:10	
Center Flash RH	PSID #125	3, 4, 6	A50.J1:19		Park brak Sens	PSID #162	3, 4	A36.JB:9	12.1
Center Mkr	PSID #27	3, 4, 6	A50.J2:7		Pass Heat Sol	PSID #24	3, 4, 6	A54.J2:7	
Cornering Dash	PSID #200	3, 4	A56.J2:6		Pass Rec.Cylinder	SID #63	3, 4, 5, 6	A54.J2:10	
Cyclope Lt	PSID #116	3, 4, 6	A51.J2:10		Pass Rfg Sol	PSID #23	3, 4, 5, 6	A54.J1:7	
Defr water Pmp	SID #41	3, 4	A47.J1:16		Pass. Wtr pump	PSID #17	3, 4, 6	A54.J1:10	
Docking Dash Sw	PSID #40	3, 4	A56.J2:10		RearFlsh LH	PSID #131	3, 4, 6	A51.J1:13	
Driver Def Fan	PSID #180	3, 4, 5, 6	A47.J2:1		RearFlsh RH	PSID #132	3, 4, 6	A51.J1:4	
Driver heat Sol	PSID #16	3, 4, 5, 6	A47.J1:3		Rev lights	SID #43	3, 4, 6	A50.J1:7	
Driver Light Sw	PSID #104	3, 4, 6	A44.J2:7		RH Corner Light	PSID #121	3, 4, 5, 6	A48.J1:3	
Driver Rfg Sol	PSID #29	3, 4, 5, 6	A47.J1:1		RH Docking Light	PSID #123	3, 4, 6	A51.J1:3	
Driver Sensor	PSID #28	3, 4, 5	A47.J2:11		Rr Start Sw	PSID #59	3, 4	A52.J2:5	
Driver window	SID #83	3, 4, 6	A45.J2:13		Ser Brake Trans	SID #49	4, 6	A51.J1:16	
Drv air Trap	SID #64	3, 4, 6	A45.J1:3		SldO 5v supply	SID #23	4	A58.J2:15	
Drv Rec Cylind	PSID #30	3, 4, 5, 6	A47.J1:4		SldO Close Sw	SID #18	3, 4	A58.J1:21	
Elec.Horn SW61	PSID #82	3, 4	A56.J2:7		SldO Limit Out	SID #20	3, 4	A58.J2:9	
Engine Door Se	PSID #6	3, 4	A52.J2:6		SldO Mot Neg	SID #15	3, 4, 5, 6	A58.J1:16	
Evap Motor Rly	PSID #77	3, 4, 5, 6	A54.J1:19		SldO Mot Pos	SID #16	3, 4, 5, 6	A58.J1:19	
Evap Spd Ctrl	PSID #78	3, 4, 6	A54.J1:1		SldO Mot SpeedA	SID #9	3, 6	A58.J1:1	
Flash RH Sw	PSID #133	3, 4	A48.J2:5		SldO Mot SpeedB	SID #10	3, 6	A58.J1:3	
Flasher LH	PSID #130	3, 4	A46.J1:20		SldO Open Sw	SID #17	3, 4	A58.J1:20	
Fog's Lights LH	PSID #134	3, 4, 5, 6	A46.J1:1		SldO Park Br	SID #8	3, 4	A58.J2:6	
Fog's lights RH	PSID #136	3, 4, 5, 6	A48.J1:1		SldO Remote Led	SID #11	3, 4, 5, 6	A58.J1:4	
Foot trap	PSID #37	3, 4, 6	A45.J2:4		SldO Seal Def	SID #13	3, 4, 5, 6	A58.J1:10	
FR Clearance lights	PSID #137	3, 4, 6	A46.J1:10		SldO Seal Inf	SID #12	3, 4, 5, 6	A58.J1:7	
Fr Side Flsh	PSID #10	3, 4, 6	A48.J2:13		SldO Secu Pin	SID #21	3, 4, 5, 6	A58.J2:4	
Fr Start Sw	PSID #58	3, 4	A36.JB:22	3.2	SldO Vacc Gen	SID #14	3, 4, 5, 6	A58.J2:1	
FrontMkr Lts LH	PSID #148	3, 4, 6	A46.J1:13		SldO Vacuum Sensor	SID #5	3, 4	A58.J2:11	
FrontMkr Lts RH	PSID #149	3, 4, 6	A48.J1:10		Starter Relay	PSID #60	4, 6	A52.J1:10	
Hazard Switch	PSID #138	3, 4	A36.JB:4	26.1	StepLts	PSID #117	3, 4, 6	A41.J1:1	
Hd Light Call	PSID #140	3, 4	A56.J1:20		Tag axle Sw	PSID #165	3, 4	A42.J1:20	
HdLamp Wsh Pmp	SID #48	3, 4, 6	A44.J1:10		Unloader RH	PSID #32	3, 4, 5, 6	A54.J2:4	
Head Lights Pos1	PSID #143	3, 4	A56.J1:17		Upper Brk Lamp	PSID #43	3, 4, 6	A51.J2:7	
Hi Low Beam	SID #62	3, 4, 5	A56.J1:21		Upper Wash Sw	PSID #190	3, 4	A55.J2:9	
High Beam LH	PSID #141	3, 4, 5, 6	A46.J2:4		Upper Wiper Int	PSID #191	3, 4	A55.J2:12	
High Beam RH	PSID #145	3, 4, 5, 6	A48.J2:1		Upper Wiper Sw	PSID #192	3, 4	A55.J2:13	
Horn	PSID #83	3, 4, 5, 6	A44.J1:16		WakeUp Rly	SID #30	4, 5, 6	A36.JA:15	3.2
LH Corner Lts	PSID #120	3, 4, 5, 6	A46.J2:1						

MULTIPLEX ERROR MESSAGES LIST

FMI 3 = Shorted High ; FMI 4 = Shorted Low ; FMI 5 = Open Circuit ; FMI 6 = Current above Normal

Cluster message	SID/PSID	FMI	Module.Pin#	Page	Cluster message	SID/PSID	FMI	Module.Pin#	Page
A/C Pres HiSd	PSID #12	3, 4, 5	A52.J1:13		Fr Flsh-Mkr LH	PSID #128	3, 4, 6	A45.J1:3	
A/C Pres LoSd	PSID #13	3, 4, 5	A52.J1:14		Fr Side Flsh	PSID #10	3, 4, 6	A48.J1:20	
Aux Bypass Sw	SID #69	3, 4	A42.J1:10		Fr Start Sw	PSID #58	3, 4	A36.JB:22	3.2
Backup Light &	PSID #167	3, 4, 6	A50.J1:20		Front Flash RH	PSID #126	3, 4, 6	A48.J1:6	
Battery Equalizer	SID #61	3, 4	A45.J1:12		FrontMkr Lts LH	PSID #148	3, 4, 5, 6	A45.J1:21	
Brake Interlock Sol	SID #76	3, 6	A42.J1:11		FrontMkr Lts RH	PSID #149	3, 4, 5, 6	A48.J1:7	
Brake Pres Driver	SID #73	3, 4	A45.J1:14		FrStart Enable Sw	PSID #56	3, 4	A52.J1:9	
Brake Pres Intrlk	SID #74	3, 4	A45.J1:13		Hazard Switch	PSID #138	3, 4	A36.JB:4	26.1
Brk Lts Sens	PSID #119	3, 4	A36.JB:13	12.1	Head Lights Pos1	PSID #143	3, 4	A42.J1:4	
Ceiling Door Lt	PSID #108	3, 4, 6	A36.JA:25	12.1	Hi Low Beam	SID #62	3, 4	A42.J1:8	
Center Flash LH	PSID #124	3, 4, 6	A50.J1:5		High Beam LH	PSID #141	3, 4, 5, 6	A45.J1:6	
Center Flash RH	PSID #125	3, 4, 6	A50.J1:7		High Beam RH	PSID #145	3, 4, 5, 6	A48.J1:3	
Center Mkr	PSID #27	3, 4, 5, 6	A50.J1:8		Horn	PSID #83	3, 4, 5, 6	A45.J1:20	
Cond Rly spd1	PSID #41	3, 4, 5, 6	A54.J1:5		Indir Lts Rly	PSID #110		A53.J1:3	
Cond Rly spd2	PSID #42	3, 4, 6	A42.J1:16		Knee Ctrl Sol	PSID #86	3, 4, 5, 6	A41.J1:11	
Cyclope Lt	PSID #116	4, 6	A51.J1:7		Knee down Sol	PSID #89	3, 4, 5, 6	A41.J1:14	
Direct Lts Relay	PSID #102	3, 4	A53.J1:2		Knee Down Sw	PSID #93	3, 4	A41.J1:7	
Driver Def Fan	PSID #180	3, 4, 5, 6	A47.J1:1		Knee Up Sol	PSID #95	3, 4, 5, 6	A41.J1:15	
Driver heat Sol	PSID #16	3, 4, 5, 6	A46.J1:6		Knee Up Sw	PSID #94	3, 4	A41.J1:6	
Driver Light Sw	PSID #104	3, 4, 6	A36.JA:24		Kneeling Alm	PSID #85	3, 4, 5, 6	A42.J1:14	
Driver Light Sw	SID #67	3, 4	A41.J1:18		Kneeling Level Se	SID #81	3, 4	A46.J1:13	
Driver Rfg Sol	PSID #29	3, 4, 5, 6	A46.J1:5		Lavatory Fan4	PSID #98	4, 5, 6	A52.J1:4	
Driver Sensor	PSID #28	3, 4, 5	A41.J1:1		Low Beam LH	PSID #142	3, 4, 6	A45.J1:7	
Driver window	SID #83	3, 4, 6	A48.J1:1		Low Beam RH	PSID #146	3, 4, 6	A48.J1:4	
Drv air Trap	SID #64	3, 4, 6	A44.J1:2		Lower Stop Lamps	PSID #153	3, 4, 6	A50.J1:6	
Drv Rec Cylind	PSID #30	3, 4, 5, 6	A47.J1:2		Lower Washer pmp	PSID #181	4, 5, 6	A46.J1:3	
Emergency Lt R15	SID #47	3, 4, 5, 6	A53.J1:21		Master Interlock Sw	SID #71	3, 4	A36.JB:16	
Emergency Relay	PSID #44	3, 4, 5, 6	A36.JA:17	3.2	Next Stop Sign	SID #80	3, 4, 6	A41.J1:13	
Engine Door Se	PSID #6	3, 4	A49.J1:10		Next Stop Sw	SID #70	3, 4	A42.J1:9	
Engine Fan Spd1	PSID #53	3, 4, 5, 6	A52.J1:1		Next Stop Wcl	SID #72	3, 4	A53.J1:12	
Engine Fan Spd2	PSID #54	3, 4, 5, 6	A52.J1:2		Oil Separator	SID #75	3, 4, 5, 6	A52.J1:3	
Ent Close Out	PSID #70	3, 4	A36.JB:17		Open Door Sw	SID #78	3, 4, 5, 6	A44.J1:4	
Ent close Sens	PSID #63	3, 4	A47.J1:10		P Rack Fan	PSID #21	3, 4	A41.J1:20	
Ent Close Sol	PSID #65	3, 4, 5, 6	A47.J1:6		Park brak Sens	PSID #162	3, 4	A36.JB:9	12.1
Ent Door Close	PSID #64	3, 4	A36.JB:10		Park brake Sol	PSID #163	3, 6	A42.J1:12	
Ent open out	PSID #71	3, 4	A36.JB:15	29.1	Pass Heat Sol	PSID #24	3, 4, 6	A54.J1:8	
Ent Open Sol	PSID #67	3, 4, 5, 6	A47.J1:7		Pass On_Off Sig	SID #29	3, 4, 5, 6	A54.J1:21	
Ent Unlk Sol	PSID #72	3, 4, 5, 6	A47.J1:8		Pass Rec.Cylinder	SID #63	3, 4, 5, 6	A54.J1:20	
Evap Motor Rly	PSID #77	3, 4, 5, 6	A54.J1:7		Pass Rfg Sol	PSID #23	3, 4, 5, 6	A54.J1:3	
Flash RH Sw	PSID #133	3, 4	A48.J1:12		Pass. Wtr pump	PSID #17	3, 4, 6	A54.J1:4	
Flasher LH	PSID #130	3, 4	A45.J1:9		Read Lts Rly	PSID #113	3, 4, 5, 6	A53.J1:5	
Foot trap	PSID #37	3, 4, 6	A45.J1:2		Read Lts Sw	PSID #114	3, 4	A41.J1:10	
FR Clearance lights	PSID #137	3, 4, 5, 6	A44.J1:8		Rear CutOut Sw	PSID #18	3, 4	A36.JB:21	38.1

MULTIPLEX ERROR MESSAGES LIST

FMI 3 = Shorted High ; FMI 4 = Shorted Low ; FMI 5 = Open Circuit ; FMI 6 = Current above Normal

Cluster message	SID/PSID	FMI	Module.Pin#	Page					
RearFlsh LH	PSID #131	3, 4, 6	A51.J1:21						
RearFlsh RH	PSID #132	3, 4, 6	A51.J1:3						
Retarder signal	PSID #164	3, 4	A50.J1:12						
RJB fan	SID #37	3, 4, 6	A52.J1:7						
Rr Clearance lights	PSID #151	3, 4, 5, 6	A50.J1:4						
Rr Start Sw	PSID #59	3, 4	A52.J1:11						
RrStart Enable Sw	PSID #57	3, 4	A52.J1:10						
Ser Brake Trans	SID #49	3, 4, 6	A51.J1:1						
Starter Relay	PSID #60	4, 6	A52.J1:6						
Step Led light	SID #77	3, 4, 6	A41.J1:30						
StepLts	PSID #117	3, 4, 6	A47.J1:5						
Tag axle Sw	PSID #165	3, 4	A42.J1:19						
Tail Lights	PSID #152	3, 4, 5, 6	A51.J1:8						
Trans Inh Sig	SID #25	3, 4, 5, 6	A50.J1:2						
Trans Neutral Sens	PSID #168	3, 4	A50.J1:11						
Under Floor lights	PSID #112	4, 6	A47.J1:21						
Unloader RH	PSID #32	3, 4, 5, 6	A52.J1:21						
Up Def Heater1	SID #34	3, 4, 5, 6	A46.J1:1						
Up Def Heater2	SID #35	3, 4, 5, 6	A46.J1:2						
Upper Brk Lamp	PSID #43	3, 4, 6	A51.J1:6						
WakeUp Rly	SID #30	4, 5, 6	A36.JA:15	3.2					
WCL Pump Rly	PSID #176	3, 4, 6	A49.J1:11						
WCLDorSig to USonic	SID #24	3, 4, 5, 6	A49.J1:12						

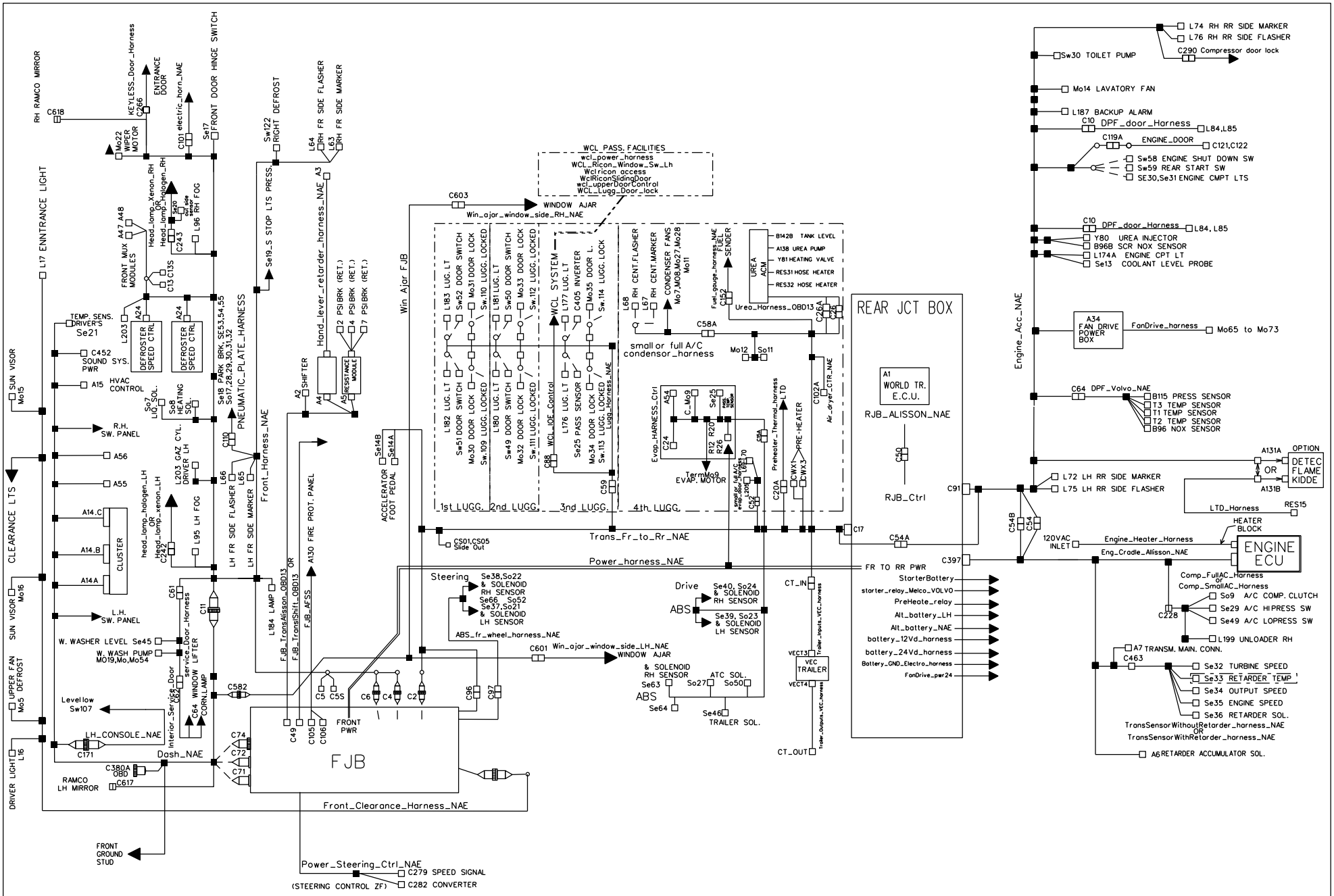

PREVOST	WIRING DIAGRAM	NO: D061670	PAGE: C	REVISION 12

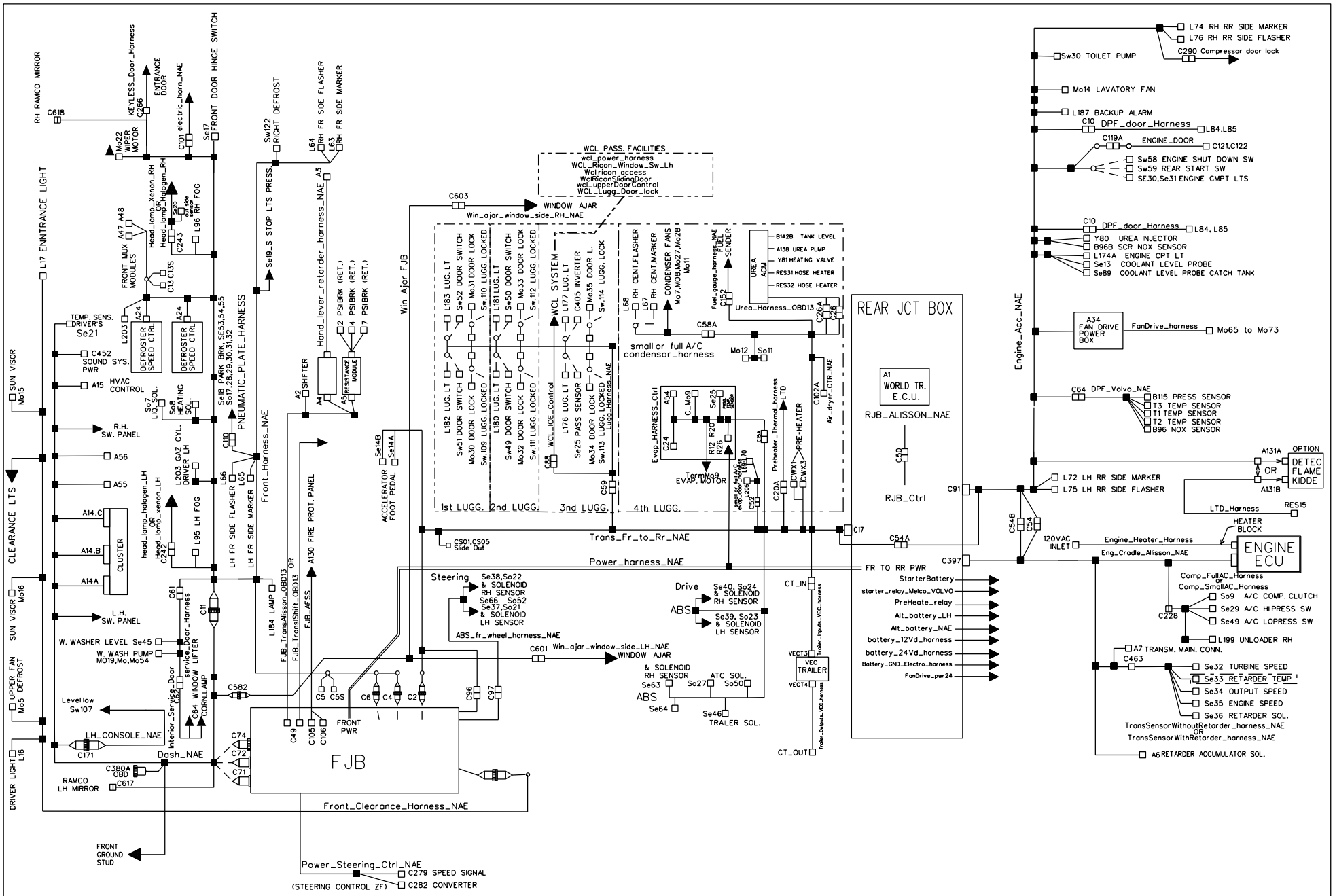

PREVOST	WIRING DIAGRAM	NO: D061670	PAGE: C	REVISION 13

Vehicule Harness RoadMap

DESCRIPTION	Ref Only	UREE PWR
ORDRE DE CHANGEMENT	Before 2020002	2020002
VÉH. EFFECTIF	Before 6611	L-6611
TI Resp		SB
Harness (105)		
ACB_Gen2	idemX3_060035	
ABS_fr_wheel_harness	060361	
Air_dryer_CTR	idemX3_060095	
AltBattery_UL_LL	060415	
AltBattery_UR	060416	
AltGnd_Extr	060417	
AltGnd_LL	idemCom_069504	
AltGnd_R	IdemCom_060264	
AltGnd_UL	060414	
AltGnd_UR	idem_Com_060264	
AltJumper_UL	060413	
Alt_Ctrl_LH_harness	060406	
Alt_Ctrl_RH_harness	060407	
Awning_harness	060400	
BATTERY_interconnect	060152	
Beru_antenna	060495	
Beru_Fjb	IdemX3_060045	
Block_Diodes_Resistor_1_RJB	060324	
Bloc_resistor_620R	idem VIP 060811	
Comp_FullAC_Harness	061482	
Comp_SmallAC_Harness	0610093	
compressor door lock	idem x3 060778	
Full_AC_Condensor_harness	idemX3_060377	
Small_AC_condensor_harness	060302	
DPF_door_Harness	IDEM COM069833	
DPF_Door_light	idemX3_060037	
DPF_Volvo	idemX3_060089	
ENGINE_DOOR	idemX3_060039	
LTD_Harness	idemX3_069738	
Eng_Cradle_Allisson	061490	
Engine_Block_Heater_Harness	0610126	
Engine_Chassis_GND	IDEM X3 060306	
equilizer_harness	IDEM_COM069539	
evap_door_harness_FullAC	idemX3_060556	
evap_door_harness_SmallAC	060418	
Evap_HARNESS_Ctrl	060017	
Evap_power_harness	IDEM _ X3_060529	
Evap_power_ground_harness	IDEM _ X3_060527	
Evap_Power_breaker_harness	060450	
FJB_2015	0610044	
FJB_AFSS	060397	
FJB_TransAlisson_OBD13	IdemX3_0610096	
FanDrive_harness	068820_IdemCOM	
FanDrive_pwr24	Idem_Com_069245	
FanDrive_pwrGnd	idem_Com_069246	
Flame_Detector_Ext_Harness	Idem X3 060436	
Front_Clearance_Harness	0610045	
Front_Harness_NAE	0610046	
Fuel_gauge_harness	idemX3_060087	
Hand_lever_retarder_harness_NAE	idemX3_060083	
head_lamp_halogen_LH	IDEMX3_069864	
head_lamp_halogen_RH	IDEMX3_069864	

Vehicule Harness RoadMap

DESCRIPTION	Ref Only	UREE PWR
ORDRE DE CHANGEMENT	Before 2020002	2020002
VÉH. EFFECTIF	Before 6611	L-6611
TI Resp		SB
Head_lamp_xenon_LH	IDEMX3_069977	
Head_lamp_xenon_RH	IDEMX3_069865	
Interior_Service_Door	060502	
KEYLESS_DOOR_HARNESS	060423	
LH_CONSOLE	060355	
TB LH	TB0572	
Lugg_Harness	069831	
Luggage_door_lock_2013	idemX3_069551	
Lugg_doorLock_OptLightLH	060369	
Lugg_doorLock_OptLightRH	060298	
PNEUMATIC_PLATE_HARNESS	060367	
PowerVecr	Idem_COM_069540	
Power_fr to rr_harness	060451	
POWER COND SMALL AC HARNESS	069727	
Power steering Ctrl	060378 idem x3	
PreHeate_relay	069516_IdemCOM	
Preheater gnd	idem_X3_060308	
RH_Console	060931	
RJB_ALISSON	0610047	0610279
RjbCtrlHarness	IdemX3_0610097	idemX3_0611010
RadiatorChassisGnd	062315	
REAR_LAMPS	idemX3_069552	
Relay_Melco_batt	Idem_com_069542	
RH Consol Switches Option	069791 + 069792	
Rr_clearence_harness	IDEM COM069829	
service_Door_Harness	060498	
SlideOut_Arriere_gauche	0610151	
SlideOut_Avant_gauche	0610150	
SmallAC_front_harness	060392	
starter_relay_Melco_VOLVO	idem_com_069515	
StarterBattery	idem_Com_069518	
Starter_Chassis_Gnd	idemX3_060307	
Trailer_Inputs_VEC_harness	069771	
Trailer_Outputs_VEC_harness	069772	
TransSensorWithRetarder_harness	idemX3_069777	
TransSensorWithoutRetarder_harness	idemX3_069778	
Trans_Fr_to_Rr_NAE_FULL_AC	0610048	0610278
Trans_Fr_to_Rr_NAE_SMALL_AC	0610049	0611011
Urea_Harness	IDEM X3_069984	idemX3_0611012
WCL_IOE_Control	069832	
WCL_Lugg_Door_lock	idem X3 069339	
wcl_power_harness	idem X3 069337	
wcl_upperDoorControl	069841	
Wcl ricon access	idem X3 060782	
battGnd_electro_harness	Idem_Com_069534	
battery_12Vd_harness	IdemX3_069560	
battery_24Vd_harness	IdemX3_069561	
batteryGndHarness	IdemCom_069525	
booster_positive_Harness	IdemX3_060028	
Dash	0610050	
TB CENTRAL	TB0571	
electric_horn	IdemX3_060074	
Engine_Acc	0610027	0610311

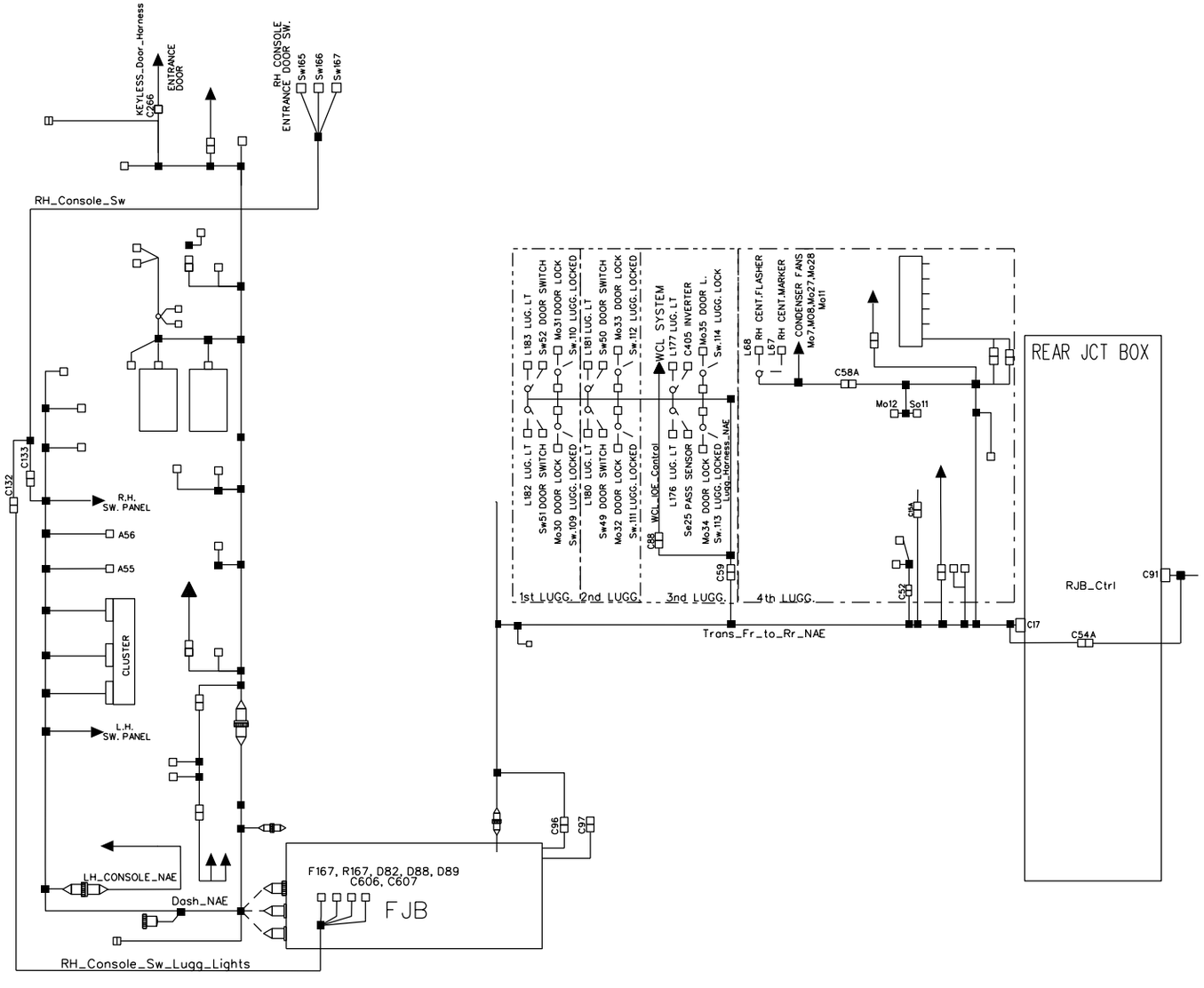

FRONT

REAR

PREVOST	WIRING DIAGRAM	NO: D061670	PAGE: C SP1	REVISION 00

Vehicle Harness Roadmap

DESCRIPTION	NAE	NAE PHASE 2	LTD EXTENDED	Correctifs MTH NAE	Pre-heat relay removed	Option WCL	Torsadé les fils de sortie de vitesse tr	Option remorque electrique	Low Press	ELD + ISM	ABS8 ROM2
CHANGE ORDER	2015007	2016094	2016109	2017032	2017055	2017066	2017085	2017091	2017080	2017071	2017040
WIRING REVISION	0	1-2-3-4-5-6	1-2-3-4-5-6	7	8	9	10	10	11	11	12
Harness (105)											
ACB_Gen2	idemX3_060035										
ABS_fr_wheel_harness_NAE	060361										
Air_dryer_CTR_NAE	idemX3_060095										
AltBattery_UL_LL	060415										
AltBattery_UR	60416										
AltGnd_Extr	60417										
AltGnd_LL	idemCom_069504										
AltGnd_R	IdemCom_060264										
AltGnd_UL	60414										
AltGnd_UR	idem_Com_060264										
AltJumper_UL	60413										
Alt_Ctrl_LH_harness	60406										
Alt_Ctrl_RH_harness	60407										
Awning_harness_NAE	60400										
BATTERY_interconnect	060152										
Beru_antenna_NAE	060495										
Beru_Fjb	IdemX3_060045										
Block_Diodes_Resistor_1_RJB	60324										
Bloc_resistor_620R						idem VIP 060811					
Comp_FullAC_Harness	060381								061482		
Comp_SmallAC_Harness	060382										
compressor door lock	idem x3 060778										
Full_AC_Condensor_harness	idemX3_060377										
Small_AC_condensor_harness	60302										
DPF_door_Harness	idemX3_060033										
DPF_Door_light	idemX3_060037										
DPF_Volvo_NAE	idemX3_060089										
ENGINE_DOOR	idemX3_060039										
LTD_Harness	idemX3_069062		idemX3_069738								
Eng_Cradle_Allisson_NAE	060386								061490		
Engine_Block_Heater_Harness	068723										
Engine_Chassis_GND	IDEM X3 060306										
equilizer_harness	069539										
evap_door_harness_FullAC	IDEMX3_060041	idemX3_060556									
evap_door_harness_SmallAC	60418										
Evap_HARNESS_Ctrl	60373				060017						
Evap_power_harness_	Idem_COM 060175	IDEM _ X3_060529									
Evap_power_ground_harness_	060175	IDEM _ X3_060527									
Evap_Power_breaker_harness	060450										
FJB_2015	060147B	rev				061426				061425	061856
FJB_AFSS	60397										
FJB_TransAlisson_OBD13	60358										
FanDrive_harness	068820_IdemCOM2015										

Vehicle Harness Roadmap

DESCRIPTION	NAE	NAE PHASE 2	LTD EXTENDED	Correctifs MTH NAE	Pre-heat relay removed	Option WCL	Torsadé les fils de sortie de vitesse tr	Option remorque electrique	Low Press	ELD + ISM	ABS8 ROM2
CHANGE ORDER	2015007	2016094	2016109	2017032	2017055	2017066	2017085	2017091	2017080	2017071	2017040
WIRING REVISION	0	1-2-3-4-5-6	1-2-3-4-5-6	7	8	9	10	10	11	11	12
FanDrive_pwr24	Idem_Com2015_069245										
FanDrive_pwrGnd	idem_Com2015_069246										
Flame_Detector_Ext_Harness	Idem X3 060436										
Front_Clearance_Harness_NAE	060337										
Front_Harness_NAE	060366 B	rev									069807
Fuel_gauge_harness_NAE	idemX3_060087										
Hand_lever_retarder_harness_NAE	idemX3_060083										
head_lamp_halogen_LH	idem_X3_060078										
head_lamp_halogen_RH	IDEM_X3_060380										
Head_lamp_xenon_LH	IdemX3_060079										
Head_lamp_xenon_RH	IDEM_X3_060390										
Interior_Service_Door	060502										
KEYLESS_DOOR_HARNESS	060423										
LH_CONSOLE_NAE	060355										
TB LH	TB0572										
Lugg_Harness_NAE	60368			061019							
Luggage_door_lock_2013	idemX3_069551										
Lugg_doorLock_OptLightLH	060369										
Lugg_doorLock_OptLightRH	060298										
PNEUMATIC_PLATE_HARNESS	060367										
PowerVecr	dem_COM2015_069540										
Power_fr to rr_harness_NAE	060451										
POWER COND SMALL AC HARNESS	069727										
Power steering Ctrl	060378 idem x3										
PreHeate_relay	069516_IdemCOM2015										
Preheater gnd	idem_X3_060308										
RH_Console_NAE	060931										
RJB_ALISSON_NAE	060329	060570				061279	069783			061845GP	
RjbCtrlHarness	Idem_COM_069394	idemX3_060547									
RadiatorChassisGnd	IDEM_COM_069279										
REAR_LAMPS	idemX3_069552										
Relay_Melco_batt	Idem_com_069542										
Rr_clearence_harness	060389	rev									
service_Door_Harness	060498										
SlideOut_Arriere_gauche	060371										
SlideOut_Avant_gauche	60372										
SmallAC_front_harness	060392										
starter_relay_Melco_VOLVO	idem_com_069515										
StarterBattery	idem_Com_069518										
Starter_Chassis_Gnd	067086	idemX3_060307									
Trailer_Inputs_VEC_harness	060316_Idem_X3_NAE							069771			
Trailer_Outputs_VEC_harness	060317_Idem_X3_NAE							069772			
TransSensorWithRetarder_harness_NAE	idemX3_060081						idemX3_069777				
TransSensorWithoutRetarder_harness_NAE	idemX3_060082						idemX3_069778				
Trans_Fr_to_Rr_NAE_FULL_AC	60330	060571		061016	060015	061285				061701	
Trans_Fr_to_Rr_NAE_SMALL_AC	060637	060637		061017		061281				061855	
Urea_Harness_OBD13	069480_IdemCOM2015	IDEM X3 060568									
WCL_IOE_Control						061267					
WCL_Lugg_Door_lock						idem X3 069339					
wcl_power_harness						idem X3 069337					
wcl_upperDoorControl						061273					
Wcl ricon access						idem X3 060782					
WclRiconSlidingDoor											
battGnd_electro_harness	Idem_Com_069534										
battery_12Vd_harness	IdemX3_069560										
battery_24Vd_harness	IdemX3_069561										
batteryGndHarness	IdemCom_069525										
booster_positive_Harness	IdemX3_060028										
Dash_NAE	60335									061424	
TB CENTRAL	TB0571										
electric_horn_NAE	IdemX3_060074										
Engine_Acc_NAE	60379	060573									

VEHICLE HARNESS ROADMAP

DESCRIPTION	NAE	NAE PHASE 2	LTD EXTENDED	Correctifs MTH NAE	Pre-heat relay removed	Option WCL	Low Press	Torsadé les fils de sortie de vitesse tr	Option remorque electrique	ELD + ISM	ABS8 ROM2	Option WCL avec la nouvelle porte WCL	Catch Tank
CHANGE ORDER	**2015007**	**2016094**	**2016109**	**2017032**	**2017055**	**2017066**	**2017080**	**2017085**	**2017091**	**2017071**	**2017040**	**2017138**	2017020
VÉH. EFFECTIF	prelim 6145 et 6175	6180	6180	6212	6279	6279	6245	***6279***	***6279***	6281			6313
Harness (105)													
ACB_Gen2	idemX3_060035												
ABS_fr_wheel_harness_NAE	60361												
Air_dryer_CTR_NAE	idemX3_060095												
AltBattery_UL_LL	060415												
AltBattery_UR	60416												
AltGnd_Extr	60417												
AltGnd_LL	idemCom_069504												
AltGnd_R	IdemCom_060264												
AltGnd_UL	60414												
AltGnd_UR	idem_Com_060264												
AltJumper_UL	60413												
Alt_Ctrl_LH_harness	60406												
Alt_Ctrl_RH_harness	60407												
Awning_harness_NAE	60400												
BATTERY_interconnect	060152												
Beru_antenna_NAE	060495												
Beru_Fjb	IdemX3_060045												
Block_Diodes_Resistor_1_RJ	60324												
Bloc_resistor_620R						idem VIP 060811							
Comp_FullAC_Harness	060381						061482						
Comp_SmallAC_Harness	060382												
compressor door lock	idem x3 060778												
Full_AC_Condensor_harness	idemX3_060377												
Small_AC_condensor_harnes	60302												
DPF_door_Harness	idemX3_060033												
DPF_Door_light	idemX3_060037												
DPF_Volvo_NAE	idemX3_060089												
ENGINE_DOOR	idemX3_060039												
LTD_Harness	idemX3_069062		idemX3_069738										
LTD_Harness_WO_AFSS	bas de wiring dans saber												
Eng_Cradle_Allisson_NAE	060386						061490						
Engine_Block_Heater_Harnes	MicroStation_068723												
Engine_Chassis_GND	IDEM X3 060306												
equilizer_harness	EM_XCOM_2015_069539												
evap_door_harness_FullAC	IDEMX3_060041	idemX3_060556											
evap_door_harness_SmallAC	60418												
Evap_HARNESS_Ctrl	60373				060017								
Evap_power_harness_	dem_COM2015_060175	DEM _ X3_060529											
Evap_power_ground_harness	060175	DEM _ X3_060527											
Evap_Power_breaker_harnes	060450												
FJB_2015	060147B	rev				061426				061425	061856		
FJB_AFSS	60397												
FJB_TransAlisson_OBD13	60358		idemX3_060542										
FanDrive_harness	068820_IdemCOM2015												
FanDrive_pwr24	dem_Com2015_069245												
FanDrive_pwrGnd	dem_Com2015_069246												
Flame_Detector_Ext_Harness	Idem X3 060436												
Front_Clearance_Harness_NA	60337												
Front_Harness_NAE	060366 B	rev									069807		
Fuel_gauge_harness_NAE	idemX3_060087												
Hand_lever_retarder_harness	idemX3_060083												
head_lamp_halogen_LH	idem_X3_060078												
head_lamp_halogen_RH	IDEM_X3_060380												

VEHICLE HARNESS ROADMAP

DESCRIPTION	NAE	NAE PHASE 2	LTD EXTENDED	Correctifs MTH NAE	Pre-heat relay removed	Option WCL	Low Press	Torsadé les fils de sortie de vitesse tr	Option remorque electrique	ELD + ISM	ABS8 ROM2	Option WCL avec la nouvelle porte WCL	Catch Tank
CHANGE ORDER	**2015007**	**2016094**	**2016109**	**2017032**	**2017055**	**2017066**	**2017080**	**2017085**	**2017091**	**2017071**	**2017040**	**2017138**	2017020
EFFECTIVE VEHICLE	prelim 6145 et 6175	6180	6180	6212	6279	6279	6245	***6279***	***6279***	6281			6313
Harness (105)													
Head_lamp_xenon_LH	IdemX3_060079												
Head_lamp_xenon_RH	IDEM_X3_060390												
Interior_Service_Door	**060502**												
KEYLESS_DOOR_HARNES	060423												
LH_CONSOLE_NAE	60355												
TB LH	TB0572												
Lugg_Harness_NAE	60368			061019								069831	
Luggage_door_lock_2013	idemX3_069551												
Lugg_doorLock_OptLightLH	060369												
Lugg_doorLock_OptLightRH	060298												
PNEUMATIC_PLATE_HARN	60367												
PowerVecr	Idem_COM2015_069540												
Power_fr to rr_harness_NAE	060451												
POWER COND SMALL AC H	069727												
Power steering Ctrl	060378 idem x3												
PreHeate_relay	69516_IdemCOM2015												
Preheater gnd	idem_X3_060308												
RH_Console_NAE	060931												
RJB_ALISSON_NAE	60329	060570				061279		069783		061845GP			069871
RjbCtrlHarness	Idem_COM_069394	idemX3_060547											
RadiatorChassisGnd	IDEM_COM_069279												Idem_COM_062315
REAR_LAMPS	idemX3_069552												
Relay_Melco_batt	Idem_com_069542												
Rr_clearence_harness	60389	rev											
service_Door_Harness	**060498**												
SlideOut_Arriere_gauche	60371												
SlideOut_Avant_gauche	60372												
SmallAC_front_harness	060392												
starter_relay_Melco_VOLVO	idem_com_069515												
StarterBattery	idem_Com_069518												
Starter_Chassis_Gnd	067086	idemX3_060307											
Trailer_Inputs_VEC_harness	60316_Idem_X3_NAE								069771				
Trailer_Outputs_VEC_harnes	60317_Idem_X3_NAE								069772				
TransSensorWithRetarder_ha	idemX3_060081							idemX3_069777					
TransSensorWithoutRetarder	idemX3_060082							idemX3_069778					
Trans_Fr_to_Rr_NAE_FULL_	60330	060571		061016	060015	061285				061701			
Trans_Fr_to_Rr_NAE_SMAL	060637	060637		061017		061281				061855			
Urea_Harness_OBD13	69480_IdemCOM2015	IDEM X3 060568											
WCL_IOE_Control						061267						069832	
WCL_Lugg_Door_lock					idem X3 069339								
wcl_power_harness					idem X3 069337								
wcl_upperDoorControl						061273							
Wcl ricon access					idem X3 060782								
WclRiconSlidingDoor												069841	
battGnd_electro_harness	Idem_Com_069534												
battery_12Vd_harness	IdemX3_069560												
battery_24Vd_harness	IdemX3_069561												
batteryGndHarness	IdemCom_069525												
booster_positive_Harness	IdemX3_060028												
Dash_NAE	60335									061424			
TB CENTRAL	TB0571												
electric_horn_NAE	IdemX3_060074												
Engine_Acc_NAE	60379	060573											069872

VEHICLE HARNESS ROADMAP

DESCRIPTION	NAE	NAE PHASE 2	LTD EXTENDED	Correctifs MTH NAE	Pre-heat relay removed	Option WCL	Low Press	Torsadé les fils de sortie de vitesse tr	Option remorque electrique	ELD + ISM	ABS8 ROM2	Option WCL avec la nouvelle porte WCL	Catch Tank	RELS
CHANGE ORDER	**2015007**	**2016094**	**2016109**	**2017032**	**2017055**	**2017066**	**2017080**	**2017085**	**2017091**	**2017071**	**2017040**	**2017138**	2017020	2018011
VÉH. EFFECTIF	prelim 6145 et 6175	6180	6180	6212	6279	6279	6245	***6279***	***6279***	6281			6313	6360
Harness (105)														
ACB_Gen2	idemX3_060035													
ABS_fr_wheel_harness_NAE	60361													
Air_dryer_CTR_NAE	idemX3_060095													
AltBattery_UL_LL	060415													
AltBattery_UR	60416													
AltGnd_Extr	60417													
AltGnd_LL	idemCom_069504													
AltGnd_R	IdemCom_060264													
AltGnd_UL	60414													
AltGnd_UR	idem_Com_060264													
AltJumper_UL	60413													
Alt_Ctrl_LH_harness	60406													
Alt_Ctrl_RH_harness	60407													
Awning_harness_NAE	60400													
BATTERY_interconnect	060152													
Beru_antenna_NAE	060495													
Beru_Fjb	IdemX3_060045													
Block_Diodes_Resistor_1_RJ	60324													
Bloc_resistor_620R						idem VIP 060811								
Comp_FullAC_Harness	060381						061482							
Comp_SmallAC_Harness	060382													
compressor door lock	idem x3 060778													
Full_AC_Condensor_harness	idemX3_060377													
Small_AC_condensor_harnes	60302													
DPF_door_Harness	idemX3_060033													
DPF_Door_light	idemX3_060037													
DPF_Volvo_NAE	idemX3_060089													
ENGINE_DOOR	idemX3_060039													
LTD_Harness	idemX3_069062		idemX3_069738											
LTD_Harness_WO_AFSS	bas de wiring dans saber													
Eng_Cradle_Allisson_NAE	060386						061490							
Engine_Block_Heater_Harnes	MicroStation_068723													
Engine_Chassis_GND	IDEM X3 060306													
equilizer_harness	EM_XCOM_2015_069539													
evap_door_harness_FullAC	IDEMX3_060041	idemX3_060556												
evap_door_harness_SmallAC	60418													
Evap_HARNESS_Ctrl	60373				060017									
Evap_power_harness_	dem_COM2015_06017	DEM _ X3_060529												
Evap_power_ground_harness	060175	DEM _ X3_060527												
Evap_Power_breaker_harnes	060450													
FJB_2015	060147B	rev				061426				061425	061856			069913
FJB_AFSS	60397													
FJB_TransAlisson_OBD13	60358		idemX3_060542											idemX3_06990
FanDrive_harness	068820_IdemCOM2015													
FanDrive_pwr24	dem_Com2015_069245													
FanDrive_pwrGnd	dem_Com2015_069246													
Flame_Detector_Ext_Harness	Idem X3 060436													
Front_Clearance_Harness_N	60337													
Front_Harness_NAE	060366 B	rev									069807			
Fuel_gauge_harness_NAE	idemX3_060087													
Hand_lever_retarder_harness	idemX3_060083													
head_lamp_halogen_LH	idem_X3_060078													
head_lamp_halogen_RH	IDEM_X3_060380													

VEHICLE HARNESS ROADMAP

DESCRIPTION	NAE	NAE PHASE 2	LTD EXTENDED	Correctifs MTH NAE	Pre-heat relay removed	Option WCL	Low Press	Torsadé les fils de sortie de vitesse tr	Option remorque electrique	ELD + ISM	ABS8 ROM2	Option WCL avec la nouvelle porte WCL	Catch Tank	RELS
CHANGE ORDER	**2015007**	**2016094**	**2016109**	**2017032**	**2017055**	**2017066**	**2017080**	**2017085**	**2017091**	**2017071**	**2017040**	**2017138**	2017020	2018011
EFFECTIVE VEHICLE	prelim 6145 et 6175	6180	6180	6212	6279	6279	6245	***6279***	***6279***	6281			6313	6360
Harness (105)														
Head_lamp_xenon_LH	IdemX3_060079													
Head_lamp_xenon_RH	IDEM_X3_060390													
Interior_Service_Door	**060502**													
KEYLESS_DOOR_HARNESS	060423													
LH_CONSOLE_NAE	60355													
TB LH	TB0572													
Lugg_Harness_NAE	60368			061019								069831		
Luggage_door_lock_2013	idemX3_069551													
Lugg_doorLock_OptLightLH	060369													
Lugg_doorLock_OptLightRH	060298													
PNEUMATIC_PLATE_HARNE	60367													
PowerVecr	dem_COM2015_069540													
Power_fr to rr_harness_NAE	060451													
POWER COND SMALL AC H	069727													
Power steering Ctrl	060378 idem x3													
PreHeate_relay	069516_IdemCOM2015													
Preheater gnd	idem_X3_060308													
RH_Console_NAE	060931													
RJB_ALISSON_NAE	60329	060570				061279		069783		061845GP			069871	069916
RjbCtrlHarness	Idem_COM_069394	idemX3_060547												
RadiatorChassisGnd	IDEM_COM_069279												Idem_COM_062315	
REAR_LAMPS	idemX3_069552													
Relay_Melco_batt	Idem_com_069542													
Rr_clearence_harness	60389	rev												
service_Door_Harness	**060498**													
SlideOut_Arriere_gauche	60371													
SlideOut_Avant_gauche	60372													
SmallAC_front_harness	060392													
starter_relay_Melco_VOLVO	idem_com_069515													
StarterBattery	idem_Com_069518													
Starter_Chassis_Gnd	067086	idemX3_060307												
Trailer_Inputs_VEC_harness	060316_Idem_X3_NAE								069771					
Trailer_Outputs_VEC_harnes	060317_Idem_X3_NAE								069772					
TransSensorWithRetarder_ha	idemX3_060081							idemX3_069777						
TransSensorWithoutRetarder_	idemX3_060082							idemX3_069778						
Trans_Fr_to_Rr_NAE_FULL_	60330	060571		061016	060015	061285				061701				069914
Trans_Fr_to_Rr_NAE_SMALL	060637	060637		061017		061281				061855				069915
Urea_Harness_OBD13	069480_IdemCOM2015	IDEM X3 060568												
WCL_IOE_Control						061267						069832		
WCL_Lugg_Door_lock						idem X3 069239								
wcl_power_harness						idem X3 069237								
wcl_upperDoorControl						061273								
Wcl ricon access						idem X3 060782								
WclRiconSlidingDoor												069841		
battGnd_electro_harness	Idem_Com_069534													
battery_12Vd_harness	IdemX3_069560													
battery_24Vd_harness	IdemX3_069561													
batteryGndHarness	IdemCom_069525													
booster_positive_Harness	IdemX3_060028													
Dash_NAE	60335									061424				
TB CENTRAL	TB0571													
electric_horn_NAE	IdemX3_060074													
Engine_Acc_NAE	60379	060573											069872	

VEHICLE HARNESS ROADMAP

DESCRIPTION	NAE	NAE PHASE 2	LTD EXTENDED	Correctifs MTH NAE	Pre-heat relay removed	Option WCL	Low Press	Torsadé les fils de sortie de vitesse tr	Option remorque electrique	ELD + ISM	ABS8 ROM2	Option WCL avec la nouvelle porte WCL	Catch Tank	RELS	RH Console Op. Switches	RH Console Op. Switches Ajout D83	OBD19	Gigavac
CHANGE ORDER	**2015007**	**2016094**	**2016109**	**2017032**	**2017055**	**2017066**	**2017080**	**2017085**	**2017091**	**2017071**	**2017040**	**2017138**	2017020	2018011	**2018087**	**2018087**	2018055	2018110
VÉH. EFFECTIF	prelim 6145 et 6175	6180	6180	6212	6279	6279	6245	***6279***	***6279***	6281			6313	6360	6392	6403	6440	6440
Harness (105)																		
ACB_Gen2	idemX3_060035																	
ABS_fr_wheel_harness_NAE	60361																	
Air_dryer_CTR_NAE	idemX3_060095																	
AltBattery_UL_LL	060415																	
AltBattery_UR	60416																	
AltGnd_Extr	60417																	
AltGnd_LL	idemCom_069504																	
AltGnd_R	IdemCom_060264																	
AltGnd_UL	60414																	
AltGnd_UR	idem_Com_060264																	
AltJumper_UL	60413																	
Alt_Ctrl_LH_harness	60406																	
Alt_Ctrl_RH_harness	60407																	
Awning_harness_NAE	60400																	
BATTERY_interconnect	060152																	
Beru_antenna_NAE	060495																	
Beru_Fjb	IdemX3_060045																	
Block_Diodes_Resistor_1_R	60324																	
Bloc_resistor_620R						idem VIP 060811												
Comp_FullAC_Harness	060381						061482											
Comp_SmallAC_Harness	060382																	
compressor door lock	idem x3 060778																	
Full_AC_Condensor_harness	idemX3_060377																	
Small_AC_condensor_harne	60302																	
DPF_door_Harness	idemX3_060033																	
DPF_Door_light	idemX3_060037																	
DPF_Volvo_NAE	idemX3_060089																	
ENGINE_DOOR	idemX3_060039																	
LTD_Harness	idemX3_069062		idemX3_069738															
LTD_Harness_WO_AFSS	as de wiring dans saber																	
Eng_Cradle_Allisson_NAE	060386						061490											
Engine_Block_Heater_Harne	MicroStation_068723																	
Engine_Chassis_GND	IDEM X3 060306																	
equilizer_harness	EM_XCOM_2015_069539																	
evap_door_harness_FullAC	IDEMX3_060041	idemX3_060556																
evap_door_harness_SmallA	60418																	
Evap_HARNESS_Ctrl	60373				060017													
Evap_power_harness_	dem_COM2015_06017	DEM _ X3_060529																
Evap_power_ground_harnes	060175	DEM _ X3_060527																
Evap_Power_breaker_harne	060450																	
FJB_2015	060147B	rev				061426				061425	061856			069913	← Already OK			
FJB_AFSS	60397																	
FJB_TransAlisson_OBD13	60358		idemX3_060542											idemX3_069901			IdemX3_0610096	
FanDrive_harness	68820_IdemCOM2015																	
FanDrive_pwr24	dem_Com2015_069245																	
FanDrive_pwrGnd	dem_Com2015_069246																	
Flame_Detector_Ext_Harnes	Idem X3 060436																	
Front_Clearance_Harness_N	60337																	
Front_Harness_NAE	060366 B	rev									069807							
Fuel_gauge_harness_NAE	idemX3_060087																	
Hand_lever_retarder_harnes	idemX3_060083																	
head_lamp_halogen_LH	idem_X3_060078																	
head_lamp_halogen_RH	IDEM_X3_060380																	

VEHICLE HARNESS ROADMAP

DESCRIPTION	NAE	NAE PHASE 2	LTD EXTENDED	Correctifs MTH NAE	Pre-heat relay removed	Option WCL	Low Press	Torsadé les fils de sortie de vitesse tr	Option remorque electrique	ELD + ISM	ABS8 ROM2	Option WCL avec la nouvelle porte WCL	Catch Tank	RELS	RH Console Op. Switches	RH Console Op. Switches Ajout D83	OBD19	Gigavac
CHANGE ORDER	**2015007**	**2016094**	**2016109**	**2017032**	**2017055**	**2017066**	**2017080**	**2017085**	**2017091**	**2017071**	**2017040**	**2017138**	2017020	2018011	**2018087**	**2018087**	2018055	2018110
EFFECTIVE VEHICLE	prelim 6145 et 6175	6180	6180	6212	6279	6279	6245	***6279***	***6279***	6281			6313	6360	6392	6403	6440	6440
Harness (105)																		
Head_lamp_xenon_LH	IdemX3_060079																	
Head_lamp_xenon_RH	IDEM_X3_060390																	
Interior_Service_Door	**060502**																	
KEYLESS_DOOR_HARNES	060423																	
LH_CONSOLE_NAE	60355																	
TB LH	TB0572																	
Lugg_Harness_NAE	60368			061019								069831						
Luggage_door_lock_2013	idemX3_069551																	
Lugg_doorLock_OptLightLH	060369																	
Lugg_doorLock_OptLightRH	060298																	
PNEUMATIC_PLATE_HARN	60367																	
PowerVecr	Idem_COM2015_069540																	
Power_fr to rr_harness_NAE	060451																	
POWER COND SMALL AC H	069727																	
Power steering Ctrl	060378 idem x3																	
PreHeate_relay	69516_IdemCOM2015																	
Preheater gnd	idem_X3_060308																	
RH_Console_NAE	060931																	
RJB_ALISSON_NAE	60329	060570				061279		069783		061845GP			069871	069916				0610149
RjbCtrlHarness	Idem_COM_069394	idemX3_060547																IdemX3_0610
RadiatorChassisGnd	IDEM_COM_069279												Idem_COM_062315					
REAR_LAMPS	idemX3_069552																	
Relay_Melco_batt	Idem_com_069542																	
Rr_clearence_harness	60389	rev													069791 + 069792			
service_Door_Harness	**060498**																	
SlideOut_Arriere_gauche	60371																	
SlideOut_Avant_gauche	60372																	
SmallAC_front_harness	060392																	
starter_relay_Melco_VOLVO	idem_com_069515																	
StarterBattery	idem_Com_069518																	
Starter_Chassis_Gnd	067086	idemX3_060307																
Trailer_Inputs_VEC_harness	60316_Idem_X3_NAE								069771									
Trailer_Outputs_VEC_harnes	60317_Idem_X3_NAE								069772									
TransSensorWithRetarder_ha	idemX3_060081							idemX3_069777										
TransSensorWithoutRetarder	idemX3_060082							idemX3_069778										
Trans_Fr_to_Rr_NAE_FULL	60330	060571		061016	060015	061285				061701				069914			0610028	
Trans_Fr_to_Rr_NAE_SMAL	060637	060637		061017		061281				061855				069915			0610029	
Urea_Harness_OBD13	69480_IdemCOM2015	IDEM X3 060568															idemX3_0610026	
WCL_IOE_Control						061267						069832						
WCL_Lugg_Door_lock					idem X3 069339													
wcl_power_harness					idem X3 069337													
wcl_upperDoorControl						061273												
Wcl ricon access					idem X3 060782													
WclRiconSlidingDoor												069841						
battGnd_electro_harness	Idem_Com_069534																	
battery_12Vd_harness	IdemX3_069560																	
battery_24Vd_harness	IdemX3_069561																	
batteryGndHarness	IdemCom_069525																	
booster_positive_Harness	IdemX3_060028																	
Dash_NAE	60335									061424					061424-D	061424-E		
TB CENTRAL	TB0571																	
electric_horn_NAE	IdemX3_060074																	
Engine_Acc_NAE	60379	060573											069872				0610027	

Vehicule Harness RoadMap

DESCRIPTION	Ref Only	OBD19	Gigavac	OPP2
ORDRE DE CHANGEMENT	Before 2018055	2018055	2018110	2015142
VÉH. EFFECTIF	Before 6440	6440	6440	6492
TI Resp		GP	GP	*SB*
Harness (105)				
ACB_Gen2	idemX3_060035			
ABS_fr_wheel_harness_NAE	060361			
Air_dryer_CTR_NAE	idemX3_060095			
AltBattery_UL_LL	060415			
AltBattery_UR	060416			
AltGnd_Extr	060417			
AltGnd_LL	idemCom_069504			
AltGnd_R	IdemCom_060264			
AltGnd_UL	060414			
AltGnd_UR	idem_Com_060264			
AltJumper_UL	060413			
Alt_Ctrl_LH_harness	060406			
Alt_Ctrl_RH_harness	060407			
Awning_harness_NAE	060400			
BATTERY_interconnect	060152			
Beru_antenna_NAE	060495			
Beru_Fjb	IdemX3_060045			
Block_Diodes_Resistor_1_RJB	060324			
Bloc_resistor_620R	idem VIP 060811			
Comp_FullAC_Harness	061482			
Comp_SmallAC_Harness	0610093			
compressor door lock	idem x3 060778			
Full_AC_Condensor_harness	idemX3_060377			
Small_AC_condensor_harness	060302			
DPF_door_Harness	idemX3_060033			IDEM COM069833
DPF_Door_light	idemX3_060037			
DPF_Volvo_NAE	idemX3_060089			
ENGINE_DOOR	idemX3_060039			
LTD_Harness	idemX3_069738			
Eng_Cradle_Allisson_NAE	061490			
Engine_Block_Heater_Harness	0610126			
Engine_Chassis_GND	IDEM X3 060306			
equilizer_harness	IDEM_COM069539			
evap_door_harness_FullAC	idemX3_060556			
evap_door_harness_SmallAC	060418			
Evap_HARNESS_Ctrl	060017			
Evap_power_harness_	IDEM _ X3_060529			
Evap_power_ground_harness_	IDEM _ X3_060527			
Evap_Power_breaker_harness	060450			
FJB_2015	069913			0610044
FJB_AFSS	060397			
FJB_TransAlisson_OBD13	idemX3_069901	IdemX3_0610096		
FanDrive_harness	068820_IdemCOM			
FanDrive_pwr24	Idem_Com_069245			
FanDrive_pwrGnd	idem_Com_069246			
Flame_Detector_Ext_Harness	Idem X3 060436			
Front_Clearance_Harness_NAE	060337			0610045
Front_Harness_NAE	069807			0610046
Fuel_gauge_harness_NAE	idemX3_060087			
Hand_lever_retarder_harness_NAE	idemX3_060083			
head_lamp_halogen_LH	idem_X3_060078			IDEMX3_069864
head_lamp_halogen_RH	IDEM_X3_060380			IDEMX3_069864

Vehicule Harness RoadMap

DESCRIPTION	Ref Only	OBD19	Gigavac	OPP2
ORDRE DE CHANGEMENT	Before 2018055	2018055	2018110	2015142
VÉH. EFFECTIF	Before 6440	6440	6440	6492
TI Resp		GP	GP	*SB*
Head_lamp_xenon_LH	IdemX3_060079			IDEMX3_069977
Head_lamp_xenon_RH	IDEM_X3_060390			IDEMX3_069865
Interior_Service_Door	060502			
KEYLESS_DOOR_HARNESS	060423			
LH_CONSOLE_NAE	060355			
TB LH	TB0572			
Lugg_Harness_NAE	069831			
Luggage_door_lock_2013	idemX3_069551			
Lugg_doorLock_OptLightLH	060369			
Lugg_doorLock_OptLightRH	060298			
PNEUMATIC_PLATE_HARNESS	060367			
PowerVecr	Idem_COM_069540			
Power_fr to rr_harness_NAE	060451			
POWER COND SMALL AC HARNESS	069727			
Power steering Ctrl	060378 idem x3			
PreHeate_relay	069516_IdemCOM			
Preheater gnd	idem_X3_060308			
RH_Console_NAE	060931			
RJB_ALISSON_NAE	069916		0610149	0610047
RjbCtrlHarness	Idem_COM_060547		IdemX3_0610097	
RadiatorChassisGnd	062315			
REAR_LAMPS	idemX3_069552			
Relay_Melco_batt	Idem_com_069542			
RH Consol Switches Option	069791 + 069792			
Rr_clearence_harness	060389			IDEM COM069829
service_Door_Harness	060498			
SlideOut_Arriere_gauche	060371			0610151
SlideOut_Avant_gauche	060372			0610150
SmallAC_front_harness	060392			
starter_relay_Melco_VOLVO	idem_com_069515			
StarterBattery	idem_Com_069518			
Starter_Chassis_Gnd	idemX3_060307			
Trailer_Inputs_VEC_harness	069771			
Trailer_Outputs_VEC_harness	069772			
TransSensorWithRetarder_harness_NA	idemX3_069777			
TransSensorWithoutRetarder_harness_	idemX3_069778			
Trans_Fr_to_Rr_NAE_FULL_AC	069914	0610028		0610048
Trans_Fr_to_Rr_NAE_SMALL_AC	069915	0610029		0610049
Urea_Harness_OBD13	IDEM X3 060568	idemX3_0610026		IDEM X3_069984
WCL_IOE_Control	069832			
WCL_Lugg_Door_lock	idem X3 069339			
wcl_power_harness	idem X3 069337			
wcl_upperDoorControl	069841			
Wcl ricon access	idem X3 060782			
battGnd_electro_harness	Idem_Com_069534			
battery_12Vd_harness	IdemX3_069560			
battery_24Vd_harness	IdemX3_069561			
batteryGndHarness	IdemCom_069525			
booster_positive_Harness	IdemX3_060028			
Dash_NAE	061424			0610050
TB CENTRAL	TB0571			
electric_horn_NAE	IdemX3_060074			
Engine_Acc_NAE	069872	0610027		

Vehicule Harness RoadMap

DESCRIPTION	Ref Only	UREE PWR
ORDRE DE CHANGEMENT	Before 2020002	2020002
VÉH. EFFECTIF	Before 6611	L-6611
TI Resp		SB
Harness (105)		
ACB_Gen2	idemX3_060035	
ABS_fr_wheel_harness	060361	
Air_dryer_CTR	idemX3_060095	
AltBattery_UL_LL	060415	
AltBattery_UR	060416	
AltGnd_Extr	060417	
AltGnd_LL	idemCom_069504	
AltGnd_R	IdemCom_060264	
AltGnd_UL	060414	
AltGnd_UR	idem_Com_060264	
AltJumper_UL	060413	
Alt_Ctrl_LH_harness	060406	
Alt_Ctrl_RH_harness	060407	
Awning_harness	060400	
BATTERY_interconnect	060152	
Beru_antenna	060495	
Beru_Fjb	IdemX3_060045	
Block_Diodes_Resistor_1_RJB	060324	
Bloc_resistor_620R	idem VIP 060811	
Comp_FullAC_Harness	061482	
Comp_SmallAC_Harness	0610093	
compressor door lock	idem x3 060778	
Full_AC_Condensor_harness	idemX3_060377	
Small_AC_condensor_harness	060302	
DPF_door_Harness	IDEM COM069833	
DPF_Door_light	idemX3_060037	
DPF_Volvo	idemX3_060089	
ENGINE_DOOR	idemX3_060039	
LTD_Harness	idemX3_069738	
Eng_Cradle_Allisson	061490	
Engine_Block_Heater_Harness	0610126	
Engine_Chassis_GND	IDEM X3 060306	
equilizer_harness	IDEM_COM069539	
evap_door_harness_FullAC	idemX3_060556	
evap_door_harness_SmallAC	060418	
Evap_HARNESS_Ctrl	060017	
Evap_power_harness	IDEM _ X3_060529	
Evap_power_ground_harness	IDEM _ X3_060527	
Evap_Power_breaker_harness	060450	
FJB_2015	0610044	
FJB_AFSS	060397	
FJB_TransAlisson_OBD13	IdemX3_0610096	
FanDrive_harness	068820_IdemCOM	
FanDrive_pwr24	Idem_Com_069245	
FanDrive_pwrGnd	idem_Com_069246	
Flame_Detector_Ext_Harness	Idem X3 060436	
Front_Clearance_Harness	0610045	
Front_Harness_NAE	0610046	
Fuel_gauge_harness	idemX3_060087	
Hand_lever_retarder_harness_NAE	idemX3_060083	
head_lamp_halogen_LH	IDEMX3_069864	
head_lamp_halogen_RH	IDEMX3_069864	

Vehicule Harness RoadMap

DESCRIPTION	Ref Only	UREE PWR
ORDRE DE CHANGEMENT	Before 2020002	2020002
VÉH. EFFECTIF	Before 6611	L-6611
TI Resp		SB
Head_lamp_xenon_LH	IDEMX3_069977	
Head_lamp_xenon_RH	IDEMX3_069865	
Interior_Service_Door	060502	
KEYLESS_DOOR_HARNESS	060423	
LH_CONSOLE	060355	
TB LH	TB0572	
Lugg_Harness	069831	
Luggage_door_lock_2013	idemX3_069551	
Lugg_doorLock_OptLightLH	060369	
Lugg_doorLock_OptLightRH	060298	
PNEUMATIC_PLATE_HARNESS	060367	
PowerVecr	Idem_COM_069540	
Power_fr to rr_harness	060451	
POWER COND SMALL AC HARNESS	069727	
Power steering Ctrl	060378 idem x3	
PreHeate_relay	069516_IdemCOM	
Preheater gnd	idem_X3_060308	
RH_Console	060931	
RJB_ALISSON	0610047	0610279
RjbCtrlHarness	IdemX3_0610097	idemX3_0611010
RadiatorChassisGnd	062315	
REAR_LAMPS	idemX3_069552	
Relay_Melco_batt	Idem_com_069542	
RH Consol Switches Option	069791 + 069792	
Rr_clearence_harness	IDEM COM069829	
service_Door_Harness	060498	
SlideOut_Arriere_gauche	0610151	
SlideOut_Avant_gauche	0610150	
SmallAC_front_harness	060392	
starter_relay_Melco_VOLVO	idem_com_069515	
StarterBattery	idem_Com_069518	
Starter_Chassis_Gnd	idemX3_060307	
Trailer_Inputs_VEC_harness	069771	
Trailer_Outputs_VEC_harness	069772	
TransSensorWithRetarder_harness	idemX3_069777	
TransSensorWithoutRetarder_harness	idemX3_069778	
Trans_Fr_to_Rr_NAE_FULL_AC	0610048	0610278
Trans_Fr_to_Rr_NAE_SMALL_AC	0610049	0611011
Urea_Harness	IDEM X3_069984	idemX3_0611012
WCL_IOE_Control	069832	
WCL_Lugg_Door_lock	idem X3 069339	
wcl_power_harness	idem X3 069337	
wcl_upperDoorControl	069841	
Wcl ricon access	idem X3 060782	
battGnd_electro_harness	Idem_Com_069534	
battery_12Vd_harness	IdemX3_069560	
battery_24Vd_harness	IdemX3_069561	
batteryGndHarness	IdemCom_069525	
booster_positive_Harness	IdemX3_060028	
Dash	0610050	
TB CENTRAL	TB0571	
electric_horn	IdemX3_060074	
Engine_Acc	0610027	0610311

Vehicule Harness RoadMap

DESCRIPTION	Driver Assist	OBD21
ORDRE DE CHANGEMENT	2019037	2021001
VÉH. EFFECTIF	L-6666	M-6663
Wiring Rev	21	22
Harness (105)		
ACB_Gen2	idemX3_0610271	
ABS_fr_wheel_harness	060361	
Air_dryer_CTR	idemX3_060095	
AltBattery_UL_LL	060415	
AltBattery_UR	060416	
AltGnd_Extr	060417	
AltGnd_LL	idemCom_069504	
AltGnd_R	IdemCom_060264	
AltGnd_UL	060414	
AltGnd_UR	idem_Com_060264	
AltJumper_UL	060413	
Alt_Ctrl_LH_harness	060406	
Alt_Ctrl_RH_harness	060407	
Awning_harness	060400	
BATTERY_interconnect	060152	
Beru_antenna	060495	
Beru_Fjb	IdemX3_060045	
Block_Diodes_Resistor_1_RJB	060324	
Bloc_resistor_620R	idem VIP 060811	
Comp_FullAC_Harness	061482	
Comp_SmallAC_Harness	0610093	
compressor door lock	idem x3 060778	
Full_AC_Condensor_harness	idemX3_060377	
Small_AC_condensor_harness	060302	
DPF_door_Harness	IDEM COM069833	
DPF_Door_light	idemX3_060037	
DPF_Volvo	idemX3_060089	
ENGINE_DOOR	idemX3_060039	
LTD_Harness	idemX3_069738	
Eng_Cradle_Allisson	061490	
Engine_Block_Heater_Harness	0610126	
Engine_Chassis_GND	IDEM X3 060306	
equilizer_harness	IDEM_COM069539	
evap_door_harness_FullAC	idemX3_060556	
evap_door_harness_SmallAC	060418	
Evap_HARNESS_Ctrl	060017	
Evap_power_harness	IDEM _ X3_060529	
Evap_power_ground_harness	IDEM _ X3_060527	
Evap_Power_breaker_harness	060450	
FJB_2015	**0610362**	0610466
FJB_AFSS	060397	
FJB_TransAlisson_OBD13	IdemX3_0610096	
FanDrive_harness	068820_IdemCOM	
FanDrive_pwr24	Idem_Com_069245	
FanDrive_pwrGnd	idem_Com_069246	
Flame_Detector_Ext_Harness	Idem X3 060436	
Front_Clearance_Harness	**0610045**	
Front_Harness_NAE	**0610363**	0610495
Fuel_gauge_harness	idemX3_060087	
Hand_lever_retarder_harness_NAE	idemX3_060083	
head_lamp_halogen_LH	IDEMX3_069864	
head_lamp_halogen_RH	IDEMX3_069864	

Vehicule Harness RoadMap

DESCRIPTION	Driver Assist	OBD21
ORDRE DE CHANGEMENT	2019037	2021001
VÉH. EFFECTIF	L-6666	M-6663
TI Resp	21	22
Head_lamp_xenon_LH	IDEMX3_069977	
Head_lamp_xenon_RH	IDEMX3_069865	
Interior_Service_Door	060502	
KEYLESS_DOOR_HARNESS	060423	
LH_CONSOLE	060355	0610496
TB LH	TB0572	
Lugg_Harness	069831	
Luggage_door_lock_2013	idemX3_069551	
Lugg_doorLock_OptLightLH	060369	
Lugg_doorLock_OptLightRH	060298	
PNEUMATIC_PLATE_HARNESS	060367	0610468
PowerVecr	Idem_COM_069540	
Power_fr to rr_harness	060451	
POWER COND SMALL AC HARNESS	069727	
Power steering Ctrl	060378 idem x3	
PreHeate_relay	069516_IdemCOM	
Preheater gnd	idem_X3_060308	
RH_Console	060931	
RJB_ALISSON	0610279	0610497
RjbCtrlHarness	idemX3_0611010	IDEMCOM0610457
RadiatorChassisGnd	062315	
REAR_LAMPS	idemX3_069552	
Relay_Melco_batt	Idem_com_069542	
RH Consol Switches Option	069791 + 069792	
Rr_clearence_harness	IDEM COM069829	
service_Door_Harness	060498	
SlideOut_Arriere_gauche	0610151	
SlideOut_Avant_gauche	0610150	
SmallAC_front_harness	060392	
starter_relay_Melco_VOLVO	idem_com_069515	
StarterBattery	idem_Com_069518	
Starter_Chassis_Gnd	idemX3_060307	
Trailer_Inputs_VEC_harness	069771	
Trailer_Outputs_VEC_harness	069772	
TransSensorWithRetarder_harness	idemX3_069777	
TransSensorWithoutRetarder_harness	idemX3_069778	
Trans_Fr_to_Rr_NAE_FULL_AC	0610278	0610498
Trans_Fr_to_Rr_NAE_SMALL_AC	0611011	0610499
Urea_Harness	idemX3_0611012	
WCL_IOE_Control	069832	
WCL_Lugg_Door_lock	idem X3 069339	
wcl_power_harness	idem X3 069337	
wcl_upperDoorControl	069841	
Wcl ricon access	idem X3 060782	
battGnd_electro_harness	Idem_Com_069534	
battery_12Vd_harness	IdemX3_069560	
battery_24Vd_harness	IdemX3_069561	
batteryGndHarness	IdemCom_069525	
booster_positive_Harness	IdemX3_060028	
Dash	0610361	0610500
TB CENTRAL	TB0571	
electric_horn	IdemX3_060074	
Engine_Acc	0610311	

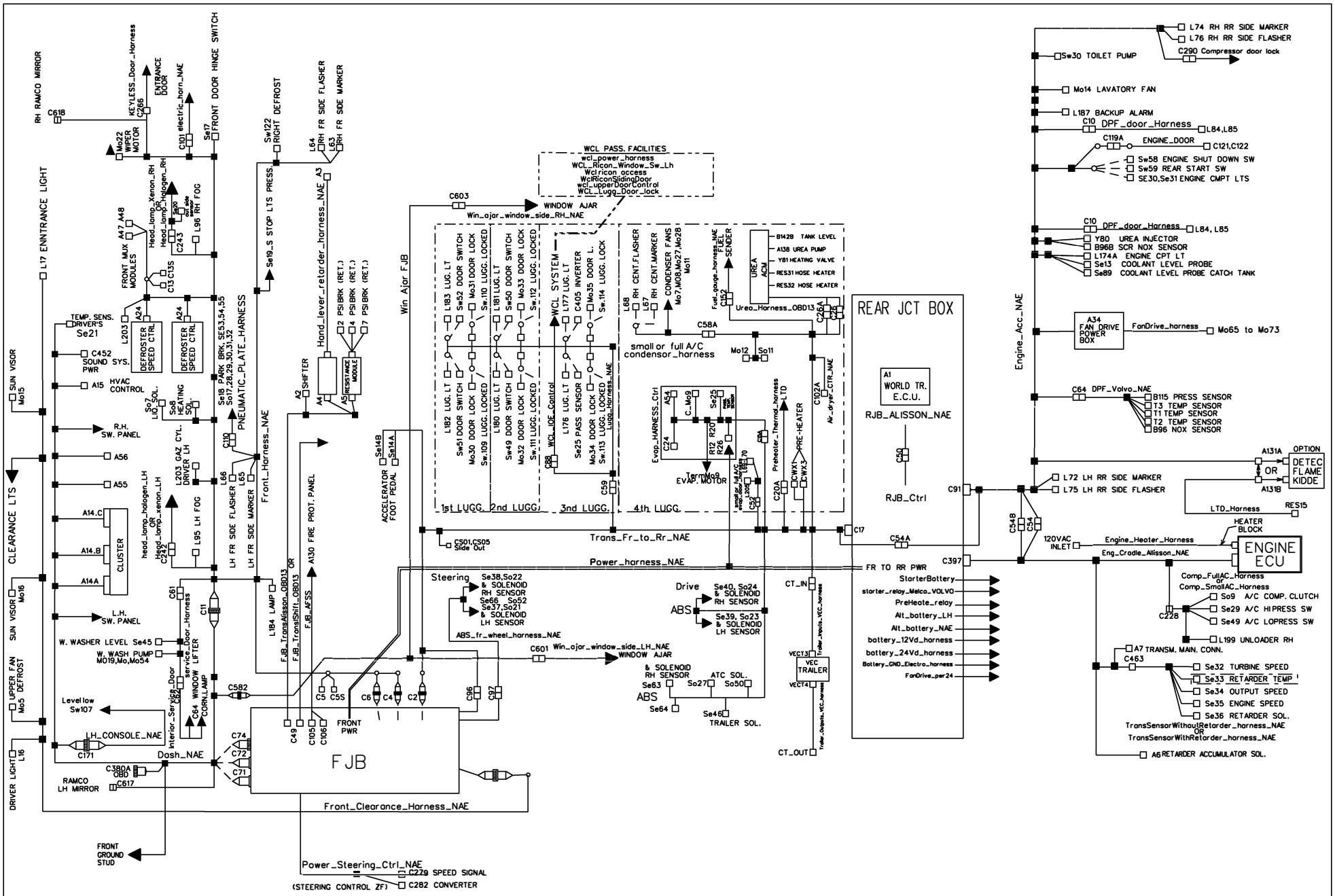

PREVOST	WIRING DIAGRAM	NO: D061670	PAGE: C	REVISION 23

Vehicule Harness RoadMap

DESCRIPTION	Emirror/Gateway	OBD22
ORDRE DE CHANGEMENT	2021072	2022001
VÉH. EFFECTIF	N-6724	N-6739
Wiring Rev	23	24
Harness (105)		
ACB_Gen2	**idemX3_0610271**	
ABS_fr_wheel_harness	060361	
Air_dryer_CTR	idemX3_060095	
AltBattery_UL_LL	060415	
AltBattery_UR	060416	
AltGnd_Extr	060417	
AltGnd_LL	idemCom_069504	
AltGnd_R	IdemCom_060264	
AltGnd_UL	060414	
AltGnd_UR	idem_Com_060264	
AltJumper_UL	060413	
Alt_Ctrl_LH_harness	060406	
Alt_Ctrl_RH_harness	060407	
Awning_harness	060400	
BATTERY_interconnect	060152	
Beru_antenna	060495	
Beru_Fjb	IdemX3_060045	
Block_Diodes_Resistor_1_RJB	060324	
Bloc_resistor_620R	idem VIP 060811	
Comp_FullAC_Harness Bitzer	061482	
Comp_FullAC_Harness Bock	NA	IDEMVIP0610550
Comp_SmallAC_Harness	0610093	
compressor door lock	idem x3 060778	
Full_AC_Condensor_harness	idemCOM0610237	
Small_AC_condensor_harness	060302	
DPF_door_Harness	IDEM COM069833	
DPF_Door_light	idemX3_060037	
DPF_Volvo	idemX3_060089	
ENGINE_DOOR	idemX3_060039	
LTD_Harness	idemX3_069738	
Eng_Cradle_Allisson	061490	
Engine_Block_Heater_Harness	0610126	
Engine_Chassis_GND	IDEM X3 060306	
equilizer_harness	IDEM_COM069539	
evap_door_harness_FullAC	idemX3_060556	
evap_door_harness_SmallAC	060418	
Evap_HARNESS_Ctrl	060017	
Evap_power_harness	IDEM _ X3_060529	
Evap_power_ground_harness	IDEM _ X3_060527	
Evap_Power_breaker_harness	060450	
FJB_2015	0610592	
FJB_AFSS	060397	
FJB_TransAlisson_OBD13	IdemX3_0610096	
FanDrive_harness	068820_IdemCOM	
FanDrive_pwr24	Idem_Com_069245	
FanDrive_pwrGnd	idem_Com_069246	
Flame_Detector_Ext_Harness	Idem X3 060436	
Front_Clearance_Harness	**0610045**	
Front_Harness_NAE	0610593	
Fuel_gauge_harness	idemX3_060087	
Hand_lever_retarder_harness_NAE	idemX3_060083	
head_lamp_halogen_LH	IDEMX3_069864	
hea		

Vehicule Harness RoadMap

DESCRIPTION	Emirror/Gateway	OBD22
ORDRE DE CHANGEMENT	2021072	2022001
VÉH. EFFECTIF	N-6724	N-6739
TI Resp	23	24
Head_lamp_xenon_LH	IDEMX3_069977	
Head_lamp_xenon_RH	IDEMX3_069865	
Interior_Service_Door	060502	
KEYLESS_DOOR_HARNESS	060423	
LH_CONSOLE	0610496	
Lugg_Harness	069831	
Luggage_door_lock_2013	idemX3_069551	
Lugg_doorLock_OptLightLH	060369	
Lugg_doorLock_OptLightRH	060298	
PNEUMATIC_PLATE_HARNESS	Idem VIP 0610579	
PowerVecr	Idem_COM_069540	
Power_fr to rr_harness	060451	
POWER COND SMALL AC HARNESS	069727	
Power steering Ctrl	060378 idem x3	
PreHeate_relay	069516_IdemCOM	
Preheater gnd	idem_X3_060308	
RH_Console	060931	
RJB_ALISSON	0610497	
RjbCtrlHarness	IDEMCOM0610457	
RadiatorChassisGnd	062315	
REAR_LAMPS	idemX3_069552	
Relay_Melco_batt	Idem_com_069542	
RH Consol Switches Option	069791 + 069792	
Rr_clearence_harness	IDEM COM069829	
service_Door_Harness	060498	
SlideOut_Arriere_gauche	0610151	
SlideOut_Avant_gauche	0610150	
SmallAC_front_harness	060392	
starter_relay_Melco_VOLVO	idem_com_069515	
StarterBattery	idem_Com_069518	
Starter_Chassis_Gnd	idemX3_060307	
Trailer_Inputs_VEC_harness	069771	
Trailer_Outputs_VEC_harness	069772	
TransSensorWithRetarder_harness	idemX3_069777	IDEMX3_0610586
TransSensorWithoutRetarder_harness	idemX3_069778	IDEMX3_0610588
Trans_Fr_to_Rr_NAE_FULL_AC	0610498	
Trans_Fr_to_Rr_NAE_SMALL_AC	0610499	
Urea_Harness	idemX3_0611012	IDEMX3_0610591
WCL_IOE_Control	069832	
WCL_Lugg_Door_lock	idem X3 069339	
wcl_power_harness	idem X3 069337	
wcl_upperDoorControl	069841	
Wcl ricon access	idem X3 060782	
battGnd_electro_harness	Idem_Com_069534	
battery_12Vd_harness	IdemX3_069560	
battery_24Vd_harness	IdemX3_069561	
batteryGndHarness	IdemCom_069525	
booster_positive_Harness	IdemX3_060028	
Dash	0610587	
electric_horn	IdemX3_060074	
Engine_Acc	0610311	

Vehicule Harness RoadMap

DESCRIPTION	OBD22	TPMS
ORDRE DE CHANGEMENT	2022001	2021070
VÉH. EFFECTIF	N-6739	P-6787
Wiring Rev	24	25
Harness (105)		
ACB_Gen2	**idemX3_0610271**	
ABS_fr_wheel_harness	060361	
Air_dryer_CTR	idemX3_060095	
AltBattery_UL_LL	060415	
AltBattery_UR	060416	
AltGnd_Extr	060417	
AltGnd_LL	idemCom_069504	
AltGnd_R	IdemCom_060264	
AltGnd_UL	060414	
AltGnd_UR	idem_Com_060264	
AltJumper_UL	060413	
Alt_Ctrl_LH_harness	060406	
Alt_Ctrl_RH_harness	060407	
Awning_harness	060400	
BATTERY_interconnect	060152	
Beru_antenna	060495	
Beru_Fjb	IdemX3_060045	
Block_Diodes_Resistor_1_RJB	060324	
Bloc_resistor_620R	idem VIP 060811	
Comp_FullAC_Harness Bitzer	061482	
Comp_FullAC_Harness Bock	IDEMVIP0610550	
Comp_SmallAC_Harness	0610093	
compressor door lock	idem x3 060778	
Full_AC_Condensor_harness	idemCOM0610237	
Small_AC_condensor_harness	060302	
DPF_door_Harness	IDEM COM069833	
DPF_Door_light	idemX3_060037	
DPF_Volvo	idemX3_060089	
ENGINE_DOOR	idemX3_060039	
LTD_Harness	idemX3_069738	
Eng_Cradle_Allisson	061490	
Engine_Block_Heater_Harness	0610126	
Engine_Chassis_GND	IDEM X3 060306	
equilizer_harness	IDEM_COM069539	
evap_door_harness_FullAC	idemX3_060556	
evap_door_harness_SmallAC	060418	
Evap_HARNESS_Ctrl	060017	
Evap_power_harness	IDEM _ X3_060529	
Evap_power_ground_harness	IDEM _ X3_060527	
Evap_Power_breaker_harness	060450	
FJB_2015	0610592	
FJB_AFSS	060397	
FJB_TransAlisson_OBD13	IdemX3_0610096	
FanDrive_harness	068820_IdemCOM	
FanDrive_pwr24	Idem_Com_069245	
FanDrive_pwrGnd	idem_Com_069246	
Flame_Detector_Ext_Harness	Idem X3 060436	
Front_Clearance_Harness	**0610045**	
Front_Harness_NAE	0610593	
Fuel_gauge_harness	idemX3_060087	
Hand_lever_retarder_harness_NAE	idemX3_060083	
head_lamp_halogen_LH	IDEMX3_069864	
hea		

Vehicule Harness RoadMap

DESCRIPTION	OBD22	TPMS
ORDRE DE CHANGEMENT	2022001	2021070
VÉH. EFFECTIF	N-6739	P-6787
TI Resp	24	25
Head_lamp_xenon_LH	IDEMX3_069977	
Head_lamp_xenon_RH	IDEMX3_069865	
Interior_Service_Door	060502	
KEYLESS_DOOR_HARNESS	060423	
LH_CONSOLE	0610496	
Lugg_Harness	069831	
Luggage_door_lock_2013	idemX3_069551	
Lugg_doorLock_OptLightLH	060369	
Lugg_doorLock_OptLightRH	060298	
PNEUMATIC_PLATE_HARNESS	Idem VIP 0610579	
PowerVecr	Idem_COM_069540	
Power_fr to rr_harness	060451	
POWER COND SMALL AC HARNESS	069727	
Power steering Ctrl	060378 idem x3	
PreHeate_relay	069516_IdemCOM	
Preheater gnd	idem_X3_060308	
RH_Console	060931	
RJB_ALISSON	0610497	
RjbCtrlHarness	IDEMCOM0610457	
RadiatorChassisGnd	062315	
REAR_LAMPS	idemX3_069552	
Relay_Melco_batt	Idem_com_069542	
RH Consol Switches Option	069791 + 069792	
Rr_clearence_harness	IDEM COM069829	
service_Door_Harness	060498	
SlideOut_Arriere_gauche	0610151	
SlideOut_Avant_gauche	0610150	
SmallAC_front_harness	060392	
starter_relay_Melco_VOLVO	idem_com_069515	
StarterBattery	idem_Com_069518	
Starter_Chassis_Gnd	idemX3_060307	
TPMS_Antenna	0610143	0610631
TPMS_FJB	0610142	0610632
Trailer_Inputs_VEC_harness	069771	
Trailer_Outputs_VEC_harness	069772	
TransSensorWithRetarder_harness	IDEMX3_0610586	
TransSensorWithoutRetarder_harness	IDEMX3_0610588	
Trans_Fr_to_Rr_NAE_FULL_AC	0610498	
Trans_Fr_to_Rr_NAE_SMALL_AC	0610499	
Urea_Harness	IDEMX3_0610591	
WCL_IOE_Control	069832	
WCL_Lugg_Door_lock	idem X3 069339	
wcl_power_harness	idem X3 069337	
wcl_upperDoorControl	069841	
Wcl ricon access	idem X3 060782	
battGnd_electro_harness	Idem_Com_069534	
battery_12Vd_harness	IdemX3_069560	
battery_24Vd_harness	IdemX3_069561	
batteryGndHarness	IdemCom_069525	
booster_positive_Harness	IdemX3_060028	
Dash	0610587	
electric_horn	IdemX3_060074	
Engine_Acc	0610311	

Vehicule Harness RoadMap

DESCRIPTION	OBD22	TPMS	Release2024R1
ORDRE DE CHANGEMENT	2022001	2021070	2023115
VÉH. EFFECTIF	N-6739	P-6787	
Wiring Rev	24	25	29
Harness (105)			
ACB_Gen2	**idemX3_0610271**		
ABS_fr_wheel_harness	060361		
Air_dryer_CTR	idemX3_060095		
AltBattery_UL_LL	060415		
AltBattery_UR	060416		
AltGnd_Extr	060417		
AltGnd_LL	idemCom_069504		
AltGnd_R	IdemCom_060264		
AltGnd_UL	060414		
AltGnd_UR	idem_Com_060264		
AltJumper_UL	060413		
Alt_Ctrl_LH_harness	060406		
Alt_Ctrl_RH_harness	060407		
Awning_harness	060400		
BATTERY_interconnect	060152		
Beru_antenna	060495		
Beru_Fjb	IdemX3_060045		
Block_Diodes_Resistor_1_RJB	060324		
Bloc_resistor_620R	idem VIP 060811		
Comp_FullAC_Harness Bitzer	061482		
Comp_FullAC_Harness Bock	IDEMVIP0610550		
Comp_SmallAC_Harness	0610093		
compressor door lock	idem x3 060778		
Full_AC_Condensor_harness	idemCOM0610237		
Small_AC_condensor_harness	060302		
DPF_door_Harness	IDEM COM069833		
DPF_Door_light	idemX3_060037		
DPF_Volvo	idemX3_060089		
ENGINE_DOOR	idemX3_060039		
LTD_Harness	idemX3_069738		
Eng_Cradle_Allisson	061490		
Engine_Block_Heater_Harness	0610126		
Engine_Chassis_GND	IDEM X3 060306		
equilizer_harness	IDEM_COM069539		
evap_door_harness_FullAC	idemX3_060556		
evap_door_harness_SmallAC	060418		
Evap_HARNESS_Ctrl	060017		
Evap_power_harness	IDEM _ X3_060529		
Evap_power_ground_harness	IDEM _ X3_060527		
Evap_Power_breaker_harness	060450		
FJB_2015	0610592		
FJB_AFSS	060397		
FJB_TransAlisson_OBD13	IdemX3_0610096		
FanDrive_harness	068820_IdemCOM		
FanDrive_pwr24	Idem_Com_069245		
FanDrive_pwrGnd	idem_Com_069246		
Flame_Detector_Ext_Harness	Idem X3 060436		
Front_Clearance_Harness	**0610045**		
Front_Harness_NAE	0610593		0600275
Fuel_gauge_harness	idemX3_060087		
Hand_lever_retarder_harness_NAE	idemX3_060083		
head_lamp_halogen_LH	IDEMX3_069864		
head_lamp_halogen_RH	IDEMX3_069864		

Vehicule Harness RoadMap

DESCRIPTION	OBD22	TPMS	Release2024R1
ORDRE DE CHANGEMENT	2022001	2021070	2023115
VÉH. EFFECTIF	N-6739	P-6787	
TI Resp	24	25	26
Head_lamp_xenon_LH	IDEMX3_069977		
Head_lamp_xenon_RH	IDEMX3_069865		
Interior_Service_Door	060502		
KEYLESS_DOOR_HARNESS	060423		
LH_CONSOLE	0610496		
Lugg_Harness	069831		
Luggage_door_lock_2013	idemX3_069551		
Lugg_doorLock_OptLightLH	060369		
Lugg_doorLock_OptLightRH	060298		
PNEUMATIC_PLATE_HARNESS	Idem VIP 0610579		
PowerVecr	Idem_COM_069540		
Power_fr to rr_harness	060451		
POWER COND SMALL AC HARNESS	069727		
Power steering Ctrl	060378 idem x3		
PreHeate_relay	069516_IdemCOM		
Preheater gnd	idem_X3_060308		
RH_Console	060931		
RJB_ALISSON	0610497		
RjbCtrlHarness	IDEMCOM0610457		
RadiatorChassisGnd	062315		
REAR_LAMPS	idemX3_069552		
Relay_Melco_batt	Idem_com_069542		
RH Consol Switches Option	069791 + 069792		
Rr_clearence_harness	IDEM COM069829		
service_Door_Harness	060498		
SlideOut_Arriere_gauche	0610151		
SlideOut_Avant_gauche	0610150		
SmallAC_front_harness	060392		
starter_relay_Melco_VOLVO	idem_com_069515		
StarterBattery	idem_Com_069518		
Starter_Chassis_Gnd	idemX3_060307		
TPMS_Antenna	0610143	0610631	
TPMS_FJB	0610142	0610632	
Trailer_Inputs_VEC_harness	069771		
Trailer_Outputs_VEC_harness	069772		
TransSensorWithRetarder_harness	IDEMX3_0610586		
TransSensorWithoutRetarder_harness	IDEMX3_0610588		
Trans_Fr_to_Rr_NAE_FULL_AC	0610498		
Trans_Fr_to_Rr_NAE_SMALL_AC	0610499		
Urea_Harness	IDEMX3_0610591		
WCL_IOE_Control	069832		
WCL_Lugg_Door_lock	idem X3 069339		
wcl_power_harness	idem X3 069337		
wcl_upperDoorControl	069841		
Wcl ricon access	idem X3 060782		
battGnd_electro_harness	Idem_Com_069534		
battery_12Vd_harness	IdemX3_069560		
battery_24Vd_harness	IdemX3_069561		
batteryGndHarness	IdemCom_069525		
booster_positive_Harness	IdemX3_060028		
Dash	0610587		
electric_horn	IdemX3_060074		
Engine_Acc	0610311		

Vehicule Harness RoadMap

DESCRIPTION	OBD22	TPMS	Release2024R1	MCM2
ORDRE DE CHANGEMENT	2022001	2021070	2023115	2024096
VÉH. EFFECTIF	N-6739	P-6787		
Wiring Rev	24	25	29	31
Harness (105)				
ACB_Gen2	**idemX3_0610271**			
ABS_fr_wheel_harness	060361			
Air_dryer_CTR	idemX3_060095			
AltBattery_UL_LL	060415			
AltBattery_UR	060416			
AltGnd_Extr	060417			
AltGnd_LL	idemCom_069504			
AltGnd_R	IdemCom_060264			
AltGnd_UL	060414			
AltGnd_UR	idem_Com_060264			
AltJumper_UL	060413			
Alt_Ctrl_LH_harness	060406			
Alt_Ctrl_RH_harness	060407			
Awning_harness	060400			
BATTERY_interconnect	060152			
Beru_antenna	060495			
Beru_Fjb	IdemX3_060045			
Block_Diodes_Resistor_1_RJB	060324			
Bloc_resistor_620R	idem VIP 060811			
Comp_FullAC_Harness Bitzer	061482			
Comp_FullAC_Harness Bock	IDEMVIP0610550			
Comp_SmallAC_Harness	0610093			
compressor door lock	idem x3 060778			
Full_AC_Condensor_harness	idemCOM0610237			
Small_AC_condensor_harness	060302			
DPF_door_Harness	IDEM COM069833			
DPF_Door_light	idemX3_060037			
DPF_Volvo	idemX3_060089			
ENGINE_DOOR	idemX3_060039			
LTD_Harness	idemX3_069738			
Eng_Cradle_Allisson	061490			
Engine_Block_Heater_Harness	0610126			
Engine_Chassis_GND	IDEM X3 060306			
equilizer_harness	IDEM_COM069539			
evap_door_harness_FullAC	idemX3_060556			
evap_door_harness_SmallAC	060418			
Evap_HARNESS_Ctrl	060017			
Evap_power_harness	IDEM _ X3_060529			
Evap_power_ground_harness	IDEM _ X3_060527			
Evap_Power_breaker_harness	060450			
FJB_2015	0610592			0600286
FJB_AFSS	060397			
FJB_TransAlisson_OBD13	IdemX3_0610096			Deleted
FanDrive_harness	068820_IdemCOM			
FanDrive_pwr24	Idem_Com_069245			
FanDrive_pwrGnd	idem_Com_069246			
Flame_Detector_Ext_Harness	Idem X3 060436			
Front_Clearance_Harness	**0610045**			
Front_Harness_NAE	0610593		0600275	
Fuel_gauge_harness	idemX3_060087			
Hand_lever_retarder_harness_NAE	idemX3_060083			
head_lamp_halogen_LH	IDEMX3_069864			
head_lamp_halogen_RH	IDEMX3_069864			

Vehicule Harness RoadMap

DESCRIPTION	OBD22	TPMS	Release2024R1	MCM2
ORDRE DE CHANGEMENT	2022001	2021070	2023115	2024096
VÉH. EFFECTIF	N-6739	P-6787		
TI Resp	24	25	29	31
Head_lamp_xenon_LH	IDEMX3_069977			
Head_lamp_xenon_RH	IDEMX3_069865			
Interior_Service_Door	060502			
KEYLESS_DOOR_HARNESS	060423			
LH_CONSOLE	0610496			
Lugg_Harness	069831			
Luggage_door_lock_2013	idemX3_069551			
Lugg_doorLock_OptLightLH	060369			
Lugg_doorLock_OptLightRH	060298			
PNEUMATIC_PLATE_HARNESS	Idem VIP 0610579			
PowerVecr	Idem_COM_069540			
Power_fr to rr_harness	060451			
POWER COND SMALL AC HARNESS	069727			
Power steering Ctrl	060378 idem x3			
PreHeate_relay	069516_IdemCOM			
Preheater gnd	idem_X3_060308			
RH_Console	060931			
RJB_ALISSON	0610497			
RjbCtrlHarness	IDEMCOM0610457			
RadiatorChassisGnd	062315			
REAR_LAMPS	idemX3_069552			
Relay_Melco_batt	Idem_com_069542			
RH Consol Switches Option	069791 + 069792			
Rr_clearence_harness	IDEM COM069829			
service_Door_Harness	060498			
SlideOut_Arriere_gauche	0610151			
SlideOut_Avant_gauche	0610150			
SmallAC_front_harness	060392			
starter_relay_Melco_VOLVO	idem_com_069515			
StarterBattery	idem_Com_069518			
Starter_Chassis_Gnd	idemX3_060307			
TPMS_Antenna	0610143	0610631		
TPMS_FJB	0610142	0610632		
Trailer_Inputs_VEC_harness	069771			
Trailer_Outputs_VEC_harness	069772			
TransSensorWithRetarder_harness	IDEMX3_0610586			
TransSensorWithoutRetarder_harness	IDEMX3_0610588			
Trans_Fr_to_Rr_NAE_FULL_AC	0610498			
Trans_Fr_to_Rr_NAE_SMALL_AC	0610499			
Urea_Harness	IDEMX3_0610591			
WCL_IOE_Control	069832			
WCL_Lugg_Door_lock	idem X3 069339			
wcl_power_harness	idem X3 069337			
wcl_upperDoorControl	069841			
Wcl ricon access	idem X3 060782			
battGnd_electro_harness	Idem_Com_069534			
battery_12Vd_harness	IdemX3_069560			
battery_24Vd_harness	IdemX3_069561			
batteryGndHarness	IdemCom_069525			
booster_positive_Harness	IdemX3_060028			
Dash	0610587			
electric_horn	IdemX3_060074			
Engine_Acc	0610311			

Circuits list

Circuit ID	Description	Circuit ID	Description	Circuit ID	Description
		0RAD2	Fans drive electric	A3.1	Transmission
0	Power Batteries	0TR	Trailer inteface	A3.2	Transmission
0A	12V Outlets	00VA	Equalizer Gnd	A3.3	Transmission
00A	Multiplex power	12Ecu	12v Engine Ecu	A3.5	Transmission
0AltEXTR	Chassis Gnd	12ISH	Pwr I_Shift	A3.6	Transmission
0AltL	Chassis Gnd	12VA	Main distribution power	A3.7	Transmission
0AltR	Chassis Gnd	12VD	Power Batteries	A4B.8	Transmission
0AltUL	Chassis Gnd	12VI8A	Pwr to Module A50	A5.B	Transmission
0B	Engine Chassis Gnd	24VA	Main distribution power	A9CX1.2	Cluster
0C	Ignition and engine start	24VD	Power Batteries	A9CX1.4	ESP
0COND	Full HVAC passengers	24VD2	Ignition and engine start	A9CX1.5	ESP
0ECU	Engine ECU Volvo	24VD3	Main distribution power	A9CX1.6	Cluster
0EV2	Full HVAC passengers	24VI	24VI to Rear Vec	A9CX2.1	ESP
0EVAP1	Full HVAC passengers	900	J1587 network	A9CX2.2	ESP
0EVAP2	Full HVAC passengers	901	J1587 network	A9CX2.3	ESP
0F	Chassis Gnd	A1.11	Transmission	A9CX2.4	ESP
00F	GND Electronic FJB	A1.12	Transmission	A9CX2.6	ESP
00F1	Multiplex power	A1.15	Transmission	A9CX2.7	ESP
00F2	Multiplex power	A1.16	Transmission	A9CX2.9	ESP
00F3	Multiplex power	A1.18	Transmission	A9CX2.10	ESP
00F4	FJB	A1.19	Transmission	A9CX2.12	ESP
0FE	Fire suppression	A1.24	Transmission	A9CX2.13	ESP
0FH	Keyless entry system	A1.25	Transmission	A9CX2.16	ESP
00FH	Keyless entry system	A1.31	Transmission	A9CX2.17	ESP
0FH1	Driver seat	A1.33	Transmission	A9CX3.3	ESP
00FH1	HVAC defroster	A1.36	Transmission	A9CX3.5	ESP
00FH2	Multiplex power	A1.37	Transmission	A9CX3.7	ESP
00FR	GND Electronic	A1.51	Transmission	A9CX3.9	ESP
0R	Power distribution RJB	A1.52	Transmission	A9CX3.10	ESP
00R	Can Iso J2284 network	A1.54	Transmission	A9CX4.1	ESP
00R1	Master relay	A1.55	Transmission	A9CX4.4	ESP
00R2	Multiplex power	A1.58	Transmission	A9CX4.7	ESP
00R3	Multiplex power	A1.71	Transmission	A9CX4.8	ESP
00R4	Multiplex power	A1.74	Transmission	A9CX4.10	ESP
00R5	Vanner Ctr	A1.76	Transmission	A9CX4.11	ESP
00R6	Multiplex power	A1.77	Transmission	A14.A12	Cluster
00R7	Trailer inteface	A2A.9	Transmission	A14.B1	Cluster
0RAD	Engine Chassis Gnd	A2A.11	Transmission	A14.B18	Cluster

Circuits list

Circuit ID	Description	Circuit ID	Description	Circuit ID	Description
A14.B20	Cluster	A41J1.16	Engine ECU Volvo	A45J1.16	Mirrors
A14.B21	Cluster	A41J1.19	Engine ECU Volvo	A45J2.1	HVAC defroster
A27.30	Power steering	A41J2.2	Keyless entry system	A45J2.4	HVAC defroster
A27.87A	Power steering	A41J2.15	Keyless entry system	A45J2.7	Driver & entrace window
A31J4.1	Keyless entry system	A41RJ1.18	Keyless entry system	A45J2.13	Driver & entrace window
A31J4.2	Keyless entry system	A41RJ2.14	FJB	A45RJ1.17	Fog, cornering, docking lights
A31J4.3	Keyless entry system	A42J1.3	FJB	A46J1.1	Horn
A31J4.4	Keyless entry system	A42J1.4	FJB	A46J1.4	Lights, flashers, markers
A31J4.5	Keyless entry system	A42J1.7	FJB	A46J1.10	Lights, flashers, markers
A31J4.7	Keyless entry system	A42J1.13	FJB	A46J1.13	Lights, flashers, markers
A31J4.8	Keyless entry system	A42J1.16	FJB	A46J2.1	Fog, cornering, docking lights
A31J5.1	Keyless entry system	A42J1.18	FJB	A46J2.4	Lights, flashers, markers
A31J5.3	Keyless entry system	A42J2.15	FJB	A46J2.7	Lights, flashers, markers
A34.A5	Fans drive electric	A43J1.1	Lugg. doors locks	A46RJ1.17	Lights, flashers, markers
A34.B5	Fans drive electric	A43J1.3	Lugg. doors locks	A46RJ1.18	Lights, flashers, markers
A34.C5	Fans drive electric	A43J1.4	ACB	A47J1.1	HVAC defroster
A34.D5	Fans drive electric	A43J1.7	TPMS	A47J1.3	HVAC defroster
A34.E5	Fans drive electric	A43J2.1	Lugg. doors locks	A47J1.4	HVAC defroster
A34.F5	Fans drive electric	A43J2.4	Lugg. doors locks	A47J1.7	Wipers and washer
A34.G5	Fans drive electric	A43J2.7	Engine ECU Volvo	A47J1.16	Small A/C
A34.H5	Fans drive electric	A43J2.10	Engine ECU Volvo	A47J2.1	HVAC defroster
A34J.E	Fans drive electric	A43RJ1.17	ACB	A47J2.4	HVAC defroster
A34J.F	Fans drive electric	A44J1.7	Wipers and washer	A47J2.7	Keyless entry system
A34R.A3	Fans drive electric	A44J1.10	Wipers and washer	A47J2.10	Keyless entry system
A34R.B3	Fans drive electric	A44J1.16	Horn	A47J2.15	Small A/C
A34R.C3	Fans drive electric	A44J1.19	Luggages lights	A47RJ1.6	HVAC defroster
A34R.D3	Fans drive electric	A44J2.1	Sun visor	A47RJ1.17	HVAC defroster
A34R.E3	Fans drive electric	A44J2.4	Sun visor	A47RJ1.18	Wipers and washer
A34R.F3	Fans drive electric	A44J2.7	Driver lights	A47RJ2.2	Keyless entry system
A34R.G3	Fans drive electric	A44J2.10	Sun visor	A47RJ2.3	Small A/C
A34R.H3	Fans drive electric	A44J2.13	Sun visor	A48J1.1	Fog, cornering, docking lights
A36JA.11	Horn	A44RJ1.17	Lights, flashers, markers	A48J1.3	Fog, cornering, docking lights
A36JA.15	Ignition and engine start	A44RJ2.2	Driver lights	A48J1.7	Lights, flashers, markers
A36JA.17	Ignition and engine start	A44RJ2.3	Wipers and washer	A48J1.10	Lights, flashers, markers
A36JA.25	Brake, engine brake, retarder	A45J1.1	HVAC defroster	A48J2.1	Lights, flashers, markers
A41J1.3	Keyless entry system	A45J1.3	HVAC defroster	A48J2.4	Lights, flashers, markers
A41J1.4	Keyless entry system	A45J1.4	Power steering	A48J2.7	Driver & entrace window
A41J1.7	12V Power distribution FJB	A45J1.7	Fog, cornering, docking lights	A48J2.10	Driver & entrace window

Circuits list

Circuit ID	Description	Circuit ID	Description	Circuit ID	Description
A48J2.13	Lights, flashers, markers	A51RJ1.17	Rr flashers, markers, tail & stop light	A58J1.1	Slide out front left
A48RJ1.17	Fog, cornering, docking lights	A51RJ1.18	Fog, cornering, docking lights	A58J1.4	Slide out front left
A48RJ1.18	Lights, flashers, markers	A52J1.1	Fans drive electric	A58J1.7	Slide out front left
A48RJ2.2	Lights, flashers, markers	A52J1.3	Fans drive electric	A58J1.10	Slide out front left
A49J1.1	Fans drive electric	A52J1.7	Engine and RJB lights	A58J1.16	Slide out front left
A49J1.3	Fans drive electric	A52J1.10	Ignition and engine start	A58J1.19	Slide out front left
A49J1.10	Full HVAC passengers	A52J1.13	RJB fan	A58J2.1	Slide out front left
A49J1.17	Small A/C	A52J2.1	Alternators	A58J2.4	Slide out front left
A49J1.18	Small A/C	A52J2.4	Alternators	A58J2.11	Slide out front left
A49J2.1	Alternators	A52J2.13	Ignition and engine start	A58J2.15	Slide out front left
A49J2.4	Small A/C	A52RJ1.17	RJB_Gnd	A58RJ1.17	Slide out front left
A49J2.13	Brake, engine brake, retarder	A52RJ1.18	Engine and RJB lights	A58RJ2.2	Slide out front left
A49J2.15	Full HVAC passengers	A52RJ2.3	Ignition and engine start	A58RJ2.14	Slide out front left
A49RJ1.6	Small A/C	A54J1.1	Full HVAC passengers	A59J1.7	Slide out rear left
A49RJ1.18	Full HVAC passengers	A54J1.3	Full HVAC passengers	A59J1.10	Slide out rear left
A49RJ2.2	Fans drive electric	A54J1.7	Full HVAC passengers	A59J1.16	Slide out rear left
A50J1.4	Air dryer and heater	A54J1.10	Full HVAC passengers	A59J1.19	Slide out rear left
A50J1.7	Backup warnings	A54J1.16	Full HVAC passengers	A59J2.15	Slide out rear left
A50J1.13	Rr flashers, markers, tail & stop light	A54J1.19	Full HVAC passengers	A59RJ1.17	Slide out rear left
A50J1.19	Rr flashers, markers, tail & stop light	A54J2.4	Full HVAC passengers	A59RJ2.2	Slide out rear left
A50J2.1	Rr flashers, markers, tail & stop light	A54J2.7	Full HVAC passengers	A59RJ2.14	Slide out rear left
A50J2.7	Rr flashers, markers, tail & stop light	A54J2.10	Full HVAC passengers	A77.A	Equalizer
A50J2.10	Backup warnings	A54J2.13	Full HVAC passengers	A77.H	Equalizer
A50RJ1.17	Rr flashers, markers, tail & stop light	A54J2.15	Full HVAC passengers	A78.3	Equalizer
A50RJ1.18	Rr flashers, markers, tail & stop light	A54RJ1.6	Full HVAC passengers	A78.4	Equalizer
A50RJ2.2	Backup warnings	A54RJ1.17	Full HVAC passengers	A79.3	Equalizer
A50RJ2.3	Air dryer and heater	A54RJ2.2	Full HVAC passengers	A80.3	Equalizer
A51J1.1	Fog, cornering, docking lights	A54RJ2.3	Full HVAC passengers	A80.4	Equalizer
A51J1.3	Fog, cornering, docking lights	A55J1.1	Driver lights	A81JB.4	Engine ECU Volvo
A51J1.4	Rr flashers, markers, tail & stop light	A55J1.4	Cluster	A81JB.6	Power steering
A51J1.7	Rr flashers, markers, tail & stop light	A55J2.15	Keyless entry system	A81JB.10	Engine ECU Volvo
A51J1.10	Rr flashers, markers, tail & stop light	A55RJ1.18	Steering multifunctions	A81JB.15	Ignition and engine start
A51J1.13	Rr flashers, markers, tail & stop light	A56J1.3	Cluster	A81JB.16	Engine ECU Volvo
A51J1.16	Transmission	A56J1.4	Cluster	A81JB.17	Engine ECU Volvo
A51J2.1	Rr flashers, markers, tail & stop light	A56J1.7	Cluster	A81JB.19	Engine ECU Volvo
A51J2.4	Transmission	A56J1.10	Cluster	A81JB.22	Engine ECU Volvo
A51J2.7	Rr flashers, markers, tail & stop light	A56J1.13	Multiplex power	A81JB.23	Engine ECU Volvo
A51J2.10	Rr flashers, markers, tail & stop light	A56J2.15	Lugg. doors locks	A81JB.26	Engine ECU Volvo

Circuits list

Circuit ID	Description	Circuit ID	Description	Circuit ID	Description
A96.8.Black	TPMS	Alt_LL	Alternators	CInt6	FJB
A96.23.Red	TPMS	Alt_UL	Alternators	CInt7	FJB
A96.24.Black	TPMS	Alt_UR	Alternators	CInt8	FJB
A96.25.Red	TPMS	AltLL	Main distribution power	CTS	Multiplex network
A96.27.Black	TPMS	AltUL	Alternators	Cts	Multiplex network
A96.28.Red	TPMS	AltUR	Main distribution power	D1	Ignition and engine start
A100.3.White	TPMS	B85.2	Urea System	D12	Horn
A101.3.White	TPMS	B97.2	Urea System	D13	Horn
A102.3.White	TPMS	B98.2	Urea System	D51	Tag and level low
A103.1	Steering multifunctions	B115A.3	Delta P Signals	D75	Slide out front left
A103.3	Steering multifunctions	BussBar	Main distribution power	DATAKH	Keyless entry system
A103.5	Horn	CanH2	Spare	DATAKL	Keyless entry system
A108.5	Cmd_Ground	CanL2	Spare	DL0H	Spare
A130.3	Fire suppression	CB1	Main distribution power	DL0L	Spare
A130.4	Fire suppression	CB2	Main distribution power	DL1H	J1939 network
A130.6	Fire suppression	CB3	Main distribution power	DL1L	J1939 network
A130.8	Fire suppression	CB5	Main distribution power	DL2H	Transmission
A130.11	Fire suppression	CB6	Main distribution power	DL2L	Transmission
A131B.A	Fire suppression	CB8	Main distribution power	DL3H	DBUS network
A131B.C	Fire suppression	CB10	Main distribution power	DL3L	DBUS network
A137A.4	Urea System	CB48	Lights, flashers, markers	DL7H	Engine ECU Volvo
A137A.7	Urea System	CB128	Power distribution RJB	DL7L	Engine ECU Volvo
A137A.8	Urea System	CB201	Fans drive electric	DSO1.1	Slide out front left
A137A.24	Urea System	CB202	Fans drive electric	DSO2.1	Slide out rear left
A137A.28	Urea System	CB203	Fans drive electric	EI.7	Cluster
A137A.40	Urea System	CB204	Fans drive electric	EI.18	Engine ECU Volvo
A137A.44	Urea System	CB205	Fans drive electric	EMS.EB29	Ignition and engine start
A137A.49	Urea System	CB206	Fans drive electric	F4	Volvo link TGW
A137A.50	Urea System	CB207	Fans drive electric	F10	Cluster
A137A.51	Urea System	CB208	Fans drive electric	F11	Horn
A137A.54	Urea System	CC16	FJB	F12	Keyless entry system
A137A.56	Urea System	CC17	FJB	F13	12V Power distribution FJB
A137A.59	Urea System	Cd1	Multiplex network	F16	12V Power distribution FJB
A137A.62	Urea System	CInt1	FJB	F17	Multiplex power
A138.3	Urea System	CInt2	FJB	F18	Multiplex power
A138.12	Urea System	CInt3	FJB	F19	Multiplex power
AE59J1.1	Slide out rear left	CInt4	FJB	F20	Multiplex power
AE59J1.4	Slide out rear left	CInt5	FJB		

Circuits list

Circuit ID	Description	Circuit ID	Description	Circuit ID	Description
F21	Multiplex power	F130	Windows ajar	N11	Multiplex network
F23	ESP	F131	Power distribution RJB	N12	Multiplex network
F24	12V Power distribution FJB	F133	Multiplex power	N13	Multiplex network
F25	12V Outlets	F134	Multiplex power	N14	Multiplex network
F27	Driver seat	F135	Multiplex power	N15	Multiplex network
F29	12V Power distribution FJB	F136	Multiplex power	N16	Multiplex network
F30	Can Iso J2284 network	F137	24VI to Mux	N17	Multiplex network
F34	Multiplex power	F139	Alternators	N18	Multiplex network
F35	Multiplex power	F141	Small A/C	N19	Multiplex network
F36	Ignition and engine start	F142	Full HVAC passengers	N20	Multiplex network
F37	Keyless entry system	F143	Full HVAC passengers	N21	Multiplex network
F39	24V Pole power	F144	Full HVAC passengers	N22	Multiplex network
F40	Fire suppression	F147	Power distribution RJB	N23	Multiplex network
F41	Multiplex power	F199	Fans drive electric	N24	Multiplex network
F42	Pwr I_Shift	gnd_1	Cantrack	N27	Multiplex network
F43	Pwr I_Shift	Gnd_2	Cantrack	N28	Multiplex network
F44	Multiplex power	GndA	Multiplex network	N29	Multiplex network
F45	Multiplex power	jumper	Lugg. doors locks	N30	Multiplex network
F46	Multiplex power	L350A.B2	Engine ECU Volvo	N31	Multiplex network
F47	Multiplex power	Mo40.2	Windows ajar	N32	Multiplex network
F50	HVAC defroster	Mo65.3	Fans drive electric	N33	Multiplex network
F51	12V Ignition	Mo67.3	Fans drive electric	N56-1	Multiplex network
F73	Engine ECU Volvo	Mo68.3	Fans drive electric	N56-2	Multiplex network
F90	Power to Ecm	Mo69.3	Fans drive electric	Pot1	Multiplex power
F91	Engine ECU Volvo	Mo70.3	Fans drive electric	R6.30	Keyless entry system
F95	Volvo link TGW	Mo71.3	Fans drive electric	R7.30	Keyless entry system
F96	Urea System	Mo72.3	Fans drive electric	R12	Full HVAC passengers
F99	Power distribution RJB	Mo73.3	Fans drive electric	R20.87	Full HVAC passengers
F100	Engine ECU Volvo	N1	Multiplex network	R21.87	Ignition and engine start
F101	Main distribution power	N2	Multiplex network	R22.87	ECU Ignition
F106	Multiplex power	N3	Multiplex network	R23.30	Transmission
F107	Multiplex power	N4	Multiplex network	R25.87	24VI
F108	Can Iso J2284 network	N5	Multiplex network	R26.30	Full HVAC passengers
F109	Engine and RJB lights	N6	Multiplex network	R27.87A	Wipers and washer
F110	Transmission	N7	Multiplex network	R29	Engine ECU Volvo
F112	Trailer inteface	N8	Multiplex network	R30.87	12V Power distribution FJB
F121	Power distribution RJB	N9	Multiplex network	R31.87	12V Power distribution FJB
F126	Full HVAC passengers	N10	Multiplex network	R34.30	Ignition and engine start

Circuits list

Circuit ID	Description	Circuit ID	Description	Circuit ID	Description
R36.87	Horn	Se35.A	Transmission	spare28	Spare
R37.30	Horn	Se35.B	Transmission	spare29	Spare
R38.87	12V Outlets	Se37.1	ESP	spare30	Spare
R_Starter	Ignition and engine start	Se37.2	ESP	spare31	Spare
RSO1_CL	Slide out front left	Se38.1	ESP	spare32	Spare
RSO1_OP	Slide out front left	Se38.2	ESP	spare33	Spare
RSO2_CL	Slide out rear left	Se39.1	ESP	spare34	Spare
RSO2_OP	Slide out rear left	Se39.2	ESP	spare35	Spare
RTS	Multiplex network	Se40.1	ESP	spare39	Spare
Rts	Multiplex network	Se40.2	ESP	spare40	Spare
RX	TPMS	Se45.2	Cluster	spare41	Spare
Rx	Cantrack	Se46.B	Trailer park Brake	spare42	Spare
RxD	Multiplex network	Se53.C	Cluster	spare43	Spare
RxTx	Multiplex network	Se54.C	Cluster	spare44	Spare
Se11.Sig	Cluster	Se55.C	Cluster	spare64	Spare
Se11.Wrn	Cluster	Se63.1	ESP	spare65	Spare
Se13.B	Engine ECU Volvo	Se63.2	ESP	spare72	Spare
Se14A.B	Engine ECU Volvo	Se64.1	ESP	spare73	Spare
Se14B.C	Engine ECU Volvo	Se64.2	ESP	Sw1.5	Lights, flashers, markers
Se15.NO	Keyless entry system	Se67.C	ESP	Sw1C258.2	Lights, flashers, markers
Se16	Keyless entry system	Se69.C	ESP	Sw1C258.3	Lights, flashers, markers
Se17.NC	Keyless entry system	SESO2.4	Slide out front left	Sw1C258.4	Lights, flashers, markers
Se17.NO	Keyless entry system	SESO3.2	Slide out front left	Sw1C258.6	Lights, flashers, markers
Se18.B	Brake, engine brake, retarder	SESO5.4	Slide out rear left	Sw1C258.7	Lights, flashers, markers
Se19_P.D	Brake, engine brake, retarder	SESO6.2	Slide out rear left	Sw1C258.8	Lights, flashers, markers
Se19_S.D	Brake, engine brake, retarder	Shield_149	gnd shield	Sw1C259.1	Lights, flashers, markers
Se20.B	Cluster	Shield_149A	Gnd Shield	Sw1C259.2	Lights, flashers, markers
Se21.2	HVAC defroster	So9.B	Full HVAC passengers	Sw1C259.4	Lights, flashers, markers
Se23	Full HVAC passengers	So36	Small A/C	Sw2.3	Lights, flashers, markers
Se24.2	Full HVAC passengers	spare17	Spare	Sw2.6	Lights, flashers, markers
Se24.3	Full HVAC passengers	spare18	Spare	Sw3.3	Fog, cornering, docking lights
Se25.2	Full HVAC passengers	spare19	Spare	Sw3.8	Fog, cornering, docking lights
Se30.A	Engine and RJB lights	spare20	Spare	Sw4.3	Lights, flashers, markers
Se32.A	Transmission	spare21	Spare	Sw4.8	Lights, flashers, markers
Se32.B	Transmission	spare22	Spare	Sw6.4	Wipers and washer
Se33.A	Transmission	spare23	Spare	Sw14.3	Engine ECU Volvo
Se34.A	Transmission	spare24	Spare	Sw14.8	Engine ECU Volvo
Se34.B	Transmission	spare25	Spare	Sw16.3	Brake, engine brake, retarder

Circuits list

Circuit ID	Description	Circuit ID	Description	Circuit ID	Description
Sw16.8	Brake, engine brake, retarder	Sw103A.6	Backup warnings	Tx	Cantrack
Sw17.6	Engine ECU Volvo	Sw104.1	Keyless entry system	TxD	Multiplex network
Sw18A.2B	Lugg. doors locks	Sw104.3	Keyless entry system	ve+	Cantrack
Sw18A.4	Keyless entry system	Sw104.5B	Keyless entry system		
Sw18A.6	Keyless entry system	Sw107.2	Tag and level low		
Sw24.3	Driver lights	Sw107.4	Tag and level low		
Sw24.6	Driver lights	Sw107.6	Tag and level low		
Sw34.2B	Driver & entrace window	Sw107.8	Tag and level low		
Sw35.3	Engine ECU Volvo	Sw107.10	Tag and level low		
Sw35.8	Engine ECU Volvo	Sw108.1	Tag and level low		
Sw38.2B	Driver & entrace window	Sw108.3	Tag and level low		
Sw40.B	Trailer park Brake, engine brake, reta	Sw109	Lugg. doors locks		
Sw41.A1	Mirrors	Sw110	Lugg. doors locks		
Sw41.A3	Mirrors	Sw111	Lugg. doors locks		
Sw41.B1	Mirrors	Sw112	Lugg. doors locks		
Sw41.B2	Mirrors	Sw113	Lugg. doors locks		
Sw41.B4	Mirrors	Sw114	Lugg. doors locks		
Sw44	Luggages lights	Sw115	Lugg. doors locks		
Sw58.5	Ignition and engine start	Sw116	Lugg. doors locks		
Sw58.7	Ignition and engine start	Sw117	Lugg. doors locks		
Sw59.3	Ignition and engine start	Sw122.1	HVAC defroster		
Sw63A.3	Horn	Sw122.3	HVAC defroster		
Sw63A.4	Horn	Sw152.B	Fire suppression		
Sw64	Tag and level low	Sw156.6	Mirrors		
Sw82.4	Master relay	Sw156.8	Mirrors		
Sw82.5	Master relay	Sw157.2B	Sun visor		
Sw83.Acc	Ignition and engine start	Sw158.2B	Sun visor		
Sw83.Ign	Ignition and engine start	SwSo1.4	Slide out front left		
Sw83.St	Ignition and engine start	SwSo1.5	Slide out front left		
Sw85.A1	Mirrors	SwSo2.4	Slide out rear left		
Sw85.A3	Mirrors	SwSo2.5	Slide out rear left		
Sw85.B1	Mirrors	TR-Black	Trailer inteface		
Sw85.B2	Mirrors	TR-Blue	Trailer inteface		
Sw85.B4	Mirrors	TR-Brown	Trailer inteface		
Sw99.3	Fog, cornering, docking lights	TR-Green	Trailer inteface		
Sw102.3	Fog, cornering, docking lights	TR-Red	Trailer inteface		
Sw102.8	Fog, cornering, docking lights	TR-Yellow	Trailer inteface		
Sw103A.3	Backup warnings	TX	TPMS		

CIRCUITS LIST

CircuitID	Description	CircuitID	Description	CircuitID	Description
0	PowerBatteries	12VA	Maindistributionpower	A3.6	Transmission
0	PowerBatteries	12VD	PowerBatteries	A3.7	Transmission
0A	12VOutlets	12VI8A	PwrtoModuleA50	A4B.8	Transmission
00A	Keylessentrysystem	24VA	Maindistributionpower	A5.B	Transmission
00A1	Multiplexpower	24VD	PowerBatteries	A9CX1.2	Cluster
0AltEXTR	ChassisGnd	24VD2	Ignitionandenginestart	A9CX1.4	ESP
0AltL	ChassisGnd	24VD3	Maindistributionpower	A9CX1.5	ESP
0AltR	ChassisGnd	24VI	24VItoRearVec	A9CX1.6	Cluster
0AltUL	ChassisGnd	26	DriverWindoPw	A9CX2.1	ESP
0B	EngineChassisGnd	41RJ1.6	Keylessentrysystem	A9CX2.2	ESP
0C	Ignitionandenginestart	76	24VIPreHeater	A9CX2.3	ESP
0COND	FullHVACpassengers	136A	TransmissionPwr	A9CX2.4	ESP
0ECU	EngineECUVolvo	146A	PwrtoModuleA50	A9CX2.6	ESP
0EVAP1	FullHVACpassengers	290A	GndFanClutch	A9CX2.7	ESP
0F	ChassisGnd	900	J1587network	A9CX2.9	ESP
00F	GNDElectronic	901	J1587network	A9CX2.10	ESP
00F1	Multiplexpower	A1.11	Transmission	A9CX2.12	ESP
00F2	Multiplexpower	A1.12	Transmission	A9CX2.13	ESP
00F3	Multiplexpower	A1.15	Transmission	A9CX2.16	ESP
00F4	FJB	A1.16	Transmission	A9CX2.17	ESP
00F5	Groundelec	A1.18	Transmission	A9CX3.3	ESP
0FE	Firesuppression	A1.19	Transmission	A9CX3.5	ESP
0FH	Keylessentrysystem	A1.24	Transmission	A9CX3.7	ESP
00FH	Keylessentrysystem	A1.25	Transmission	A9CX3.9	ESP
0FH1	Driverseat	A1.31	Transmission	A9CX3.10	ESP
00FH1	HVACdefroster	A1.33	Transmission	A9CX4.1	ESP
00FH2	Multiplexpower	A1.36	Transmission	A9CX4.4	ESP
00FR	GNDElectronic	A1.37	Transmission	A9CX4.7	ESP
0R	PowerdistributionRJB	A1.51	Transmission	A9CX4.8	ESP
00R	CanIsoJ2284network	A1.52	Transmission	A9CX4.10	ESP
00R1	Masterrelay	A1.54	Transmission	A9CX4.11	ESP
00R2	Multiplexpower	A1.55	Transmission	A14.A12	Cluster
00R3	Multiplexpower	A1.58	Transmission	A14.B1	Cluster
00R4	Multiplexpower	A1.71	Transmission	A14.B18	Cluster
00R5	VannerCtr	A1.74	Transmission	A14.B20	Cluster
00R6	Multiplexpower	A1.76	Transmission	A14.B21	Cluster
0RAD	EngineChassisGnd	A1.77	Transmission	A27.30	Powersteering
0RAD2	Fansdriveelectric	A2A.9	Transmission	A27.87A	Powersteering
0TR-White	Trailerinterface	A2A.11	Transmission	A31J4.1	Keylessentrysystem
00VA	EqualizerGnd	A3.1	Transmission	A31J4.2	Keylessentrysystem
0W	GNDStud	A3.2	Transmission	A31J4.3	Keylessentrysystem
12Ecu	12vEngineEcu	A3.3	Transmission	A31J4.4	Keylessentrysystem
12ISH	PwrI_Shift	A3.5	Transmission	A31J4.5	Keylessentrysystem

CIRCUITS LIST

CircuitID	Description	CircuitID	Description	CircuitID	Description
A31J4.6	Keylessentrysystem	A42J1.13	Kneeling	A46RJ1.18	Frflash
A31J4.7	Keylessentrysystem	A42J1.16	FJB	A47J1.1	HVACdefroster
A31J4.8	Keylessentrysystem	A42J1.18	FJB	A47J1.3	HVACdefroster
A31J5.1	Keylessentrysystem	A42J2.15	FJB	A47J1.4	HVACdefroster
A31J5.3	Keylessentrysystem	A43J1.1	Lugg.doorslocks	A47J1.7	Wipersandwasher
A34.A5	Fansdriveelectric	A43J1.3	Lugg.doorslocks	A47J1.16	SmallA/C
A34.B5	Fansdriveelectric	A43J1.7	TPMS	A47J2.1	HVACdefroster
A34.C5	Fansdriveelectric	A43J2.1	Lugg.doorslocks	A47J2.4	HVACdefroster
A34.D5	Fansdriveelectric	A43J2.4	Lugg.doorslocks	A47J2.15	SmallA/C
A34.E5	Fansdriveelectric	A43J2.7	EngineECUVolvo	A47RJ1.6	HVACdefroster
A34.F5	Fansdriveelectric	A43J2.10	EngineECUVolvo	A47RJ1.17	HVACdefroster
A34.G5	Fansdriveelectric	A43RJ1.17	ACB	A47RJ1.18	Wipersandwasher
A34.H5	Fansdriveelectric	A44J1.4	12VPowerdistributionFJB	A47RJ2.2	Keylessentrysystem
A34J.E	Fansdriveelectric	A44J1.7	Wipersandwasher	A47RJ2.3	SmallA/C
A34J.F	Fansdriveelectric	A44J1.10	Wipersandwasher	A48J1.1	Fog
A34R.A3	Fansdriveelectric	A44J1.16	Horn	A48J1.3	Fog
A34R.B3	Fansdriveelectric	A44J1.19	Luggageslights	A48J1.7	Frflash
A34R.C3	Fansdriveelectric	A44J2.1	Sunvisor	A48J1.10	Frflash
A34R.D3	Fansdriveelectric	A44J2.4	Sunvisor	A48J2.1	Frheadlights
A34R.E3	Fansdriveelectric	A44J2.7	Driverlight	A48J2.4	Frheadlights
A34R.F3	Fansdriveelectric	A44J2.10	Sunvisor	A48J2.7	Driver&entracewindow
A34R.G3	Fansdriveelectric	A44J2.13	Sunvisor	A48J2.10	Driver&entracewindow
A34R.H3	Fansdriveelectric	A44RJ1.17	Frflash	A48J2.13	Frflash
A36JA.11	Horn	A44RJ2.2	Driverlights	A48RJ1.17	Fog
A36JA.15	Ignitionandenginestart	A44RJ2.3	Wipersandwasher	A48RJ1.18	Frflash
A36JA.16	FJB	A45J1.1	HVACdefroster	A48RJ2.2	Frflash
A36JA.17	Ignitionandenginestart	A45J1.3	HVACdefroster	A49J1.1	Fansdriveelectric
A36JA.25	Brake	A45J1.4	Powersteering	A49J1.3	Fansdriveelectric
A41J1.1	Keylessentrysystem	A45J1.7	12VPowerdistributionFJB	A49J1.10	FullHVACpassengers
A41J1.3	Keylessentrysystem	A45J1.16	Mirrors	A49J1.17	SmallA/C
A41J1.4	Keylessentrysystem	A45J2.1	HVACdefroster	A49J1.18	SmallA/C
A41J1.7	Keylessentrysystem	A45J2.4	HVACdefroster	A49J2.1	Alternators
A41J1.16	EngineECUVolvo	A45J2.7	Driver&entracewindow	A49J2.4	SmallA/C
A41J1.19	EngineECUVolvo	A45J2.13	Driver&entracewindow	A49J2.13	Brake
A41J2.2	Keylessentrysystem	A45RJ1.17	Fog	A49J2.15	SmallA/C
A41J2.15	Keylessentrysystem	A46J1.1	Horn	A49RJ1.6	SmallA/C
A41RJ1.6	Keylessentrysystem	A46J1.4	Frflash	A49RJ1.18	FullHVACpassengers
A41RJ1.18	Keylessentrysystem	A46J1.10	Frflash	A49RJ2.2	Fansdriveelectric
A41RJ2.14	FJB	A46J1.13	Frflash	A49RJ2.3	SmallA/C
A42J1.3	FJB	A46J2.1	Fog	A50J1.4	Airdryerandheater
A42J1.4	FJB	A46J2.4	Frheadlights	A50J1.7	Backupwarnings
A42J1.7	FJB	A46J2.7	Frheadlights	A50J1.13	Rrflashers
A42J1.10	Kneeling	A46RJ1.17	Frflash	A50J1.19	Rrflashers

CIRCUITS LIST

CircuitID	Description	CircuitID	Description	CircuitID	Description
A50J2.1	Rrflashers	A54RJ1.17	FullHVACpassengers	A78.3	Equalizer
A50J2.7	Rrflashers	A54RJ1.18	FullHVACpassengers	A78.4	Equalizer
A50J2.10	Backupwarnings	A54RJ2.2	FullHVACpassengers	A79.3	Equalizer
A50RJ1.17	Rrflashers	A54RJ2.3	FullHVACpassengers	A80.3	Equalizer
A50RJ1.18	Rrflashers	A54RJ2.14	FullHVACpassengers	A80.4	Equalizer
A50RJ2.2	Backupwarnings	A55J1.1	Driverlights	A81JB.4	EngineECUVolvo
A50RJ2.3	Airdryerandheater	A55J1.4	Cluster	A81JB.6	Powersteering
A51J1.1	Fog	A55J2.15	Keylessentrysystem	A81JB.10	EngineECUVolvo
A51J1.3	Fog	A55RJ1.18	Steeringmultifunctions	A81JB.15	Ignitionandenginestart
A51J1.4	Rrflashers	A56J1.3	Cluster	A81JB.16	EngineECUVolvo
A51J1.7	Rrflashers	A56J1.4	Cluster	A81JB.17	EngineECUVolvo
A51J1.10	Rrflashers	A56J1.7	Cluster	A81JB.19	EngineECUVolvo
A51J1.13	Rrflashers	A56J1.10	Cluster	A81JB.22	EngineECUVolvo
A51J1.16	Transmission	A56J1.13	Multiplexpower	A81JB.23	EngineECUVolvo
A51J1.19	WCL	A56J2.15	Frflash	A81JB.26	EngineECUVolvo
A51J2.1	Rrflashers	A57J1.1	WCL	A96.8.Black	TPMS
A51J2.4	Transmission	A57J1.3	WCL	A96.23.Red	TPMS
A51J2.7	Rrflashers	A57RJ2.14	WCL	A96.24.Black	TPMS
A51J2.10	Rrflashers	A58J1.1	Slideoutfrontleft	A96.25.Red	TPMS
A51RJ1.17	Rrflashers	A58J1.4	Slideoutfrontleft	A96.27.Black	TPMS
A51RJ1.18	Fog	A58J1.7	Slideoutfrontleft	A96.28.Red	TPMS
A52J1.1	Fansdriveelectric	A58J1.10	Slideoutfrontleft	A100.3.White	TPMS
A52J1.3	Fansdriveelectric	A58J1.16	Slideoutfrontleft	A101.3.White	TPMS
A52J1.7	EngineandRJBlights	A58J1.19	Slideoutfrontleft	A102.3.White	TPMS
A52J1.10	Ignitionandenginestart	A58J2.1	Slideoutfrontleft	A103.1	Steeringmultifunctions
A52J1.13	RJBfan	A58J2.4	Slideoutfrontleft	A103.3	Steeringmultifunctions
A52J2.1	Alternators	A58J2.11	Slideoutfrontleft	A103.5	Horn
A52J2.4	Alternators	A58J2.15	Slideoutfrontleft	A108.5	Cmd_Ground
A52J2.13	Ignitionandenginestart	A58RJ1.17	Slideoutfrontleft	A130.3	Firesuppression
A52RJ1.17	RJB_Gnd	A58RJ2.2	Slideoutfrontleft	A130.4	Firesuppression
A52RJ1.18	EngineandRJBlights	A58RJ2.14	Slideoutfrontleft	A130.6	Firesuppression
A52RJ2.3	Ignitionandenginestart	A59J1.1	Slideoutrearleft	A130.8	Firesuppression
A54J1.1	FullHVACpassengers	A59J1.4	Slideoutrearleft	A130.11	Firesuppression
A54J1.3	FullHVACpassengers	A59J1.7	Slideoutrearleft	A131A.C	Firesuppression
A54J1.7	FullHVACpassengers	A59J1.10	Slideoutrearleft	A131B.A	Firesuppression
A54J1.10	FullHVACpassengers	A59J1.16	Slideoutrearleft	A131B.C	Firesuppression
A54J1.16	SmallA/C	A59J1.19	Slideoutrearleft	A137A.4	UreaSystem
A54J1.19	FullHVACpassengers	A59J2.15	Slideoutrearleft	A137A.7	UreaSystem
A54J2.4	FullHVACpassengers	A59RJ1.17	Slideoutrearleft	A137A.8	UreaSystem
A54J2.7	HVACPassengers	A59RJ2.2	Slideoutrearleft	A137A.24	UreaSystem
A54J2.10	FullHVACpassengers	A59RJ2.14	Slideoutrearleft	A137A.28	UreaSystem
A54J2.15	FullHVACpassengers	A77.A	Equalizer	A137A.40	UreaSystem
A54RJ1.6	FullHVACpassengers	A77.H	Equalizer	A137A.44	UreaSystem

CIRCUITS LIST

CircuitID	Description	CircuitID	Description	CircuitID	Description
A137A.49	UreaSystem	CInt1	FJB	F21	Multiplexpower
A137A.50	UreaSystem	CInt2	FJB	F23	ESP
A137A.51	UreaSystem	CInt3	FJB	F24	12VPowerdistributionFJB
A137A.54	UreaSystem	CInt4	FJB	F25	12VOutlets
A137A.56	UreaSystem	CInt5	FJB	F27	Driverseat
A137A.59	UreaSystem	CInt6	FJB	F29	12VPowerdistributionFJB
A137A.62	UreaSystem	CInt7	FJB	F30	CanIsoJ2284network
A138.3	UreaSystem	CInt8	FJB	F34	Multiplexpower
A138.12	UreaSystem	CTS	Multiplexnetwork	F35	Multiplexpower
Alt_LL	Alternators	Cts	Multiplexnetwork	F36	Ignitionandenginestart
Alt_UL	Alternators	D1	Ignitionandenginestart	F37	Keylessentrysystem
Alt_UR	Alternators	D12	Horn	F39	24VPowerdistributionFJB
AltLL	Maindistributionpower	D13	Horn	F40	Firesuppression
AltUL	Alternators	D51	Tagandlevellow	F41	Multiplexpower
AltUR	Maindistributionpower	D75	Slideoutfrontleft	F42	PwrI_Shift
B85.2	UreaSystem	DATAKH	Keylessentrysystem	F43	PwrI_Shift
B97.2	UreaSystem	DATAKL	Keylessentrysystem	F44	Multiplexpower
B98.2	UreaSystem	DL0H	Spare	F45	Multiplexpower
B115A.3	DeltaPSignals	DL0L	Spare	F46	Multiplexpower
BussBar	12VItoCB10	DL1H	J1939network	F47	Multiplexpower
CanH2	Spare	DL1L	J1939network	F50	HVACdefroster
CanL2	Spare	DL2H	Transmission	F51	24VPowerdistributionFJB
CB1	Maindistributionpower	DL2L	Transmission	F53	Tagandlevellow
CB2	Maindistributionpower	DL3H	DBUSnetwork	F73	EngineECUVolvo
CB3	Maindistributionpower	DL3L	DBUSnetwork	F90	PowertoEcm
CB5	Maindistributionpower	DL7H	EngineECUVolvo	F91	EngineECUVolvo
CB6	Maindistributionpower	DL7L	EngineECUVolvo	F95	VolvolinkTGW
CB7	Maindistributionpower	DSO1.1	Slideoutfrontleft	F96	UreaSystem
CB8	Maindistributionpower	DSO2.1	Slideoutrearleft	F99	PowerdistributionRJB
CB10	Maindistributionpower	EI.7	Cluster	F100	EngineECUVolvo
CB48	Frflash	EI.18	EngineECUVolvo	F101	Maindistributionpower
CB128	PowerdistributionRJB	EMS.EB29	Ignitionandenginestart	F106	Multiplexpower
CB201	Fansdriveelectric	F4	VolvolinkTGW	F107	Multiplexpower
CB202	Fansdriveelectric	F10	Cluster	F108	CanIsoJ2284network
CB203	Fansdriveelectric	F11	Horn	F109	EngineandRJBlights
CB204	Fansdriveelectric	F12	Keylessentrysystem	F110	Transmission
CB205	Fansdriveelectric	F13	12VPowerdistributionFJB	F117	Trailer
CB206	Fansdriveelectric	F14	Multiplexpower	F118	Trailer
CB207	Fansdriveelectric	F15	Keylessentrysystem	F119	Trailerinteface
CB208	Fansdriveelectric	F16	12VPowerdistributionFJB	F121	PowerdistributionRJB
CC16	FJB	F18	Multiplexpower	F126	FullHVACpassengers
CC17	FJB	F19	Multiplexpower	F130	Windowsajar
Cd1	Multiplexnetwork	F20	Multiplexpower	F131	PowerdistributionRJB

CIRCUITS LIST

CircuitID	Description	CircuitID	Description	CircuitID	Description
F132	Multiplexpower	N12	Multiplexnetwork	R167.30	Luggageslights
F133	Multiplexpower	N13	Multiplexnetwork	R167.86	Luggageslights
F134	Multiplexpower	N14	Multiplexnetwork	R167.87	Luggageslights
F135	Multiplexpower	N15	Multiplexnetwork	R_Starter	Ignitionandenginestart
F136	Multiplexpower	N16	Multiplexnetwork	Res23	WCL
F137	24VItoMux	N17	Multiplexnetwork	RSO1_1	Slideoutfrontleft
F139	Alternators	N18	Multiplexnetwork	RSO1_2	Slideoutfrontleft
F141	FullHVACpassengers	N19	Multiplexnetwork	RSO2_1	Slideoutrearleft
F142	FullHVACpassengers	N20	Multiplexnetwork	RSO2_2	Slideoutrearleft
F143	FullHVACpassengers	N21	Multiplexnetwork	RTS	Multiplexnetwork
F144	FullHVACpassengers	N22	Multiplexnetwork	Rts	Multiplexnetwork
F147	PowerdistributionRJB	N23	Multiplexnetwork	RX	TPMS
F167	Luggage_Lights	N24	Multiplexnetwork	Rx	Cantrack
F199	Fansdriveelectric	N27	Multiplexnetwork	RxD	Multiplexnetwork
gnd_1	Cantrack	N28	Multiplexnetwork	RxTx	Multiplexnetwork
Gnd_2	Cantrack	N29	Multiplexnetwork	Se11.Sig	Cluster
GndA	Multiplexnetwork	N30	Multiplexnetwork	Se11.Wrn	Cluster
jumper	Lugg.doorslocks	N31	Multiplexnetwork	Se13.B	EngineECUVolvo
L207.1	WCL	N32	Multiplexnetwork	Se14A.B	EngineECUVolvo
L207.3	WCL	N33	Multiplexnetwork	Se14B.C	EngineECUVolvo
L207.GND	WCL	N56-1	Multiplexnetwork	Se15.NO	Keylessentrysystem
L350A.B2	EngineECUVolvo	N56-2	Multiplexnetwork	Se16	Keylessentrysystem
Mo11.3	SmallA/C	N57_1	WCL	Se17.NC	Keylessentrysystem
Mo40.2	Windowsajar	N57_2	WCL	Se17.NO	Keylessentrysystem
Mo65.3	Fansdriveelectric	Pot1	Multiplexpower	Se18.B	Brake
Mo67.3	Fansdriveelectric	R6.30	Keylessentrysystem	Se19_P.D	Brake
Mo68.3	Fansdriveelectric	R7.30	Keylessentrysystem	Se19_S.D	Brake
Mo69.3	Fansdriveelectric	R12	FullHVACpassengers	Se20.B	Cluster
Mo70.3	Fansdriveelectric	R20.87	FullHVACpassengers	Se21.2	HVACdefroster
Mo71.3	Fansdriveelectric	R21.87	Ignitionandenginestart	Se23	SmallA/C
Mo72.3	Fansdriveelectric	R22.87	Ignitionandenginestart	Se23.C	FullHVACpassengers
Mo73.3	Fansdriveelectric	R23.30	Transmission	Se23A	SmallA/C
N1	Multiplexnetwork	R25.87	24VI	Se24.2	FullHVACpassengers
N2	Multiplexnetwork	R27.87A	Wipersandwasher	Se24.3	FullHVACpassengers
N3	Multiplexnetwork	R29	EngineECUVolvo	Se25.2	FullHVACpassengers
N4	Multiplexnetwork	R30.87	12VPowerdistributionFJB	Se30.A	EngineandRJBlights
N5	Multiplexnetwork	R31.87	12VPowerdistributionFJB	Se32.A	Transmission
N6	Multiplexnetwork	R34.30	Ignitionandenginestart	Se32.B	Transmission
N7	Multiplexnetwork	R36.87	Horn	Se33.A	Transmission
N8	Multiplexnetwork	R37.30	Horn	Se34.A	Transmission
N9	Multiplexnetwork	R38.87	12VOutlets	Se34.B	Transmission
N10	Multiplexnetwork	R47.87	WCL	Se35.A	Transmission
N11	Multiplexnetwork	R54.87		Se35.B	Transmission

CIRCUITS LIST

CircuitID	Description	CircuitID	Description	CircuitID	Description
Se37.1	ESP	spare34	Spare	Sw34.2B	Driver&entracewindow
Se37.2	ESP	spare35	Spare	Sw35.3	EngineECUVolvo
Se38.1	ESP	spare39	Spare	Sw35.8	EngineECUVolvo
Se38.2	ESP	spare40	Spare	Sw38.2B	Driver&entracewindow
Se39.1	ESP	spare41	Spare	Sw40.B	Trailerparkbrake
Se39.2	ESP	spare42	Spare	Sw41.A1	Mirrors
Se40.1	ESP	spare43	Spare	Sw41.A3	Mirrors
Se40.2	ESP	spare44	Spare	Sw41.B1	Mirrors
Se45.2	Cluster	spare64	Spare	Sw41.B2	Mirrors
Se46.B	Trailerparkbrake	spare65	Spare	Sw41.B4	Mirrors
Se53.C	Cluster	spare72	Spare	Sw42.2	WCL
Se54.C	Cluster	spare73	Spare	Sw42.3	WCL
Se55.C	Cluster	STO-LOCselenoid	WCL	Sw42.4	WCL
Se63.1	ESP	Sw1.5	Frflash	Sw42.5	WCL
Se63.2	ESP	Sw1C258.2	Frflash	Sw42.6	WCL
Se64.1	ESP	Sw1C258.3	Frflash	Sw42.7	WCL
Se64.2	ESP	Sw1C258.4	Frflash	Sw44	Luggageslights
Se67.C	ESP	Sw1C258.6	Frflash	Sw46A	Engine&RJBcmpt.lights
Se69.C	ESP	Sw1C258.7	Frflash	Sw57	WCLSlidingdoorSig
Se100.4	WCL	Sw1C258.8	Frflash	Sw58.3	Ignitionandenginestart
SESO2.4	Slideoutfrontleft	Sw1C259.1	Frflash	Sw58.5	Ignitionandenginestart
SESO3.2	Slideoutfrontleft	Sw1C259.2	Frflash	Sw58.7	Ignitionandenginestart
SESO5.4	Slideoutrearleft	Sw1C259.4	Frflash	Sw59.3	Ignitionandenginestart
SESO6.2	Slideoutrearleft	Sw2.3	Frflash	Sw63A.3	Horn
Shield_149	gndshield	Sw2.6	Frflash	Sw63A.4	Horn
Shield_149A	GndShield	Sw3.3	Fog	Sw64	Tagandlevellow
So9.B	FullHVACpassengers	Sw3.8	Fog	Sw82.4	Masterrelay
So36	SmallA/C	Sw4.3	Frflash	Sw82.5	Masterrelay
spare17	Spare	Sw4.8	Frflash	Sw83.Acc	Ignitionandenginestart
spare18	Spare	Sw6.4	Wipersandwasher	Sw83.Ign	Ignitionandenginestart
spare19	Spare	Sw14.3	EngineECUVolvo	Sw83.St	Ignitionandenginestart
spare20	Spare	Sw14.8	EngineECUVolvo	Sw85.A1	Mirrors
spare21	Spare	Sw16.3	Brake	Sw85.A3	Mirrors
spare22	Spare	Sw16.8	Brake	Sw85.B1	Mirrors
spare23	Spare	Sw17.6	EngineECUVolvo	Sw85.B2	Mirrors
spare24	Spare	Sw18A.2B	Lugg.doorslocks	Sw85.B4	Mirrors
spare25	Spare	Sw18A.4	Keylessentrysystem	Sw94	WCL
spare28	Spare	Sw18A.6	Keylessentrysystem	Sw99.3	Fog
spare29	Spare	Sw20.3	WCL	Sw102.3	Fog
spare30	Spare	Sw20.8	WCL	Sw102.8	Fog
spare31	Spare	Sw24.3	Driverlights	Sw103A.3	Backupwarnings
spare32	Spare	Sw24.6	Driverlights	Sw103A.6	Backupwarnings
spare33	Spare	Sw31	WCL	Sw104.1	Keylessentrysystem

CIRCUITS LIST

CircuitID	Description	CircuitID	Description		
Sw104.3	Keylessentrysystem	ve+	Cantrack		
Sw104.5B	Keylessentrysystem				
Sw107.2	Tagandlevellow				
Sw107.4	Tagandlevellow				
Sw107.6	Tagandlevellow				
Sw107.8	Tagandlevellow				
Sw107.10	Tagandlevellow				
Sw108.1	Tagandlevellow				
Sw108.3	Tagandlevellow				
Sw109	Lugg.doorslocks				
Sw110	Lugg.doorslocks				
Sw111	Lugg.doorslocks				
Sw112	Lugg.doorslocks				
Sw113	Lugg.doorslocks				
Sw114	Lugg.doorslocks				
Sw115	Lugg.doorslocks				
Sw116	Lugg.doorslocks				
Sw117	Lugg.doorslocks				
Sw122.1	HVACdefroster				
Sw122.3	HVACdefroster				
Sw139.3	Luggageslights				
Sw139.5	Luggagelights				
Sw152.B	Firesuppression				
Sw156.6	Mirrors				
Sw156.8	Mirrors				
Sw157.2B	Sunvisor				
Sw158.2B	Sunvisor				
Sw165.3	DriverandEntrancelights				
SwSo1.4	Slideoutfrontleft				
SwSo1.5	Slideoutfrontleft				
SwSo2.4	Slideoutrearleft				
SwSo2.5	Slideoutrearleft				
TR-Black	Trailerinterface				
TR-Blue	Trailerinterface				
TR-Brown	Trailerinterface				
TR-Green	Trailerinterface				
TR-Red	Trailerinterface				
TR-Yellow	Trailerinterface				
TR_Brown	Trailerinterface				
TWU.3	WCL				
TX	TPMS				
Tx	Cantrack				
TxD	Multiplexnetwork				

CIRCUITS LIST

CircuitID	Description	CircuitID	Description	CircuitID	Description
0	PowerBatteries	12VA	Maindistributionpower	A3.5	Transmission
0	PowerBatteries	12VD	PowerBatteries	A3.6	Transmission
0A	12VOutlets	12VI8A	PwrtoModuleA50	A3.7	Transmission
00A	Keylessentrysystem	24VA	Maindistributionpower	A4B.8	Transmission
00A1	Multiplexpower	24VD	PowerBatteries	A5.B	Transmission
0AltEXTR	ChassisGnd	24VD2	Ignitionandenginestart	A9CX1.2	Cluster
0AltL	ChassisGnd	24VD3	Maindistributionpower	A9CX1.4	ESP
0AltR	ChassisGnd	24VI	24VItoRearVec	A9CX1.5	ESP
0AltUL	ChassisGnd	26	DriverWindoPw	A9CX1.6	Cluster
0B	EngineChassisGnd	41RJ1.6	Keylessentrysystem	A9CX2.1	ESP
0C	Ignitionandenginestart	76	24VIPreHeater	A9CX2.2	ESP
0COND	FullHVACpassengers	136A	TransmissionPwr	A9CX2.3	ESP
0ECU	EngineECUVolvo	146A	PwrtoModuleA50	A9CX2.4	ESP
0EVAP1	FullHVACpassengers	290A	GndFanClutch	A9CX2.6	ESP
0F	ChassisGnd	900	J1587network	A9CX2.7	ESP
00F	GNDElectronic	901	J1587network	A9CX2.9	ESP
00F1	Multiplexpower	_00	PowerBatteries	A9CX2.10	ESP
00F2	Multiplexpower	A1.11	Transmission	A9CX2.12	ESP
00F3	Multiplexpower	A1.12	Transmission	A9CX2.13	ESP
00F4	FJB	A1.15	Transmission	A9CX2.16	ESP
00F5	Groundelec	A1.16	Transmission	A9CX2.17	ESP
0FE	Firesuppression	A1.18	Transmission	A9CX3.3	ESP
0FH	Keylessentrysystem	A1.19	Transmission	A9CX3.5	ESP
00FH	Keylessentrysystem	A1.24	Transmission	A9CX3.7	ESP
0FH1	Driverseat	A1.25	Transmission	A9CX3.9	ESP
00FH1	HVACdefroster	A1.31	Transmission	A9CX3.10	ESP
00FH2	Multiplexpower	A1.33	Transmission	A9CX4.1	ESP
00FR	GNDElectronic	A1.36	Transmission	A9CX4.4	ESP
0R	PowerdistributionRJB	A1.37	Transmission	A9CX4.7	ESP
00R	CanIsoJ2284network	A1.51	Transmission	A9CX4.8	ESP
00R1	Masterrelay	A1.52	Transmission	A9CX4.10	ESP
00R2	Multiplexpower	A1.54	Transmission	A9CX4.11	ESP
00R3	Multiplexpower	A1.55	Transmission	A14.A12	Cluster
00R4	Multiplexpower	A1.58	Transmission	A14.B1	Cluster
00R5	VannerCtr	A1.71	Transmission	A14.B18	Cluster
00R6	Multiplexpower	A1.74	Transmission	A14.B20	Cluster
0RAD	EngineChassisGnd	A1.76	Transmission	A14.B21	Cluster
0RAD2	Fansdriveelectric	A1.77	Transmission	A27.30	Powersteering
0TR.White	Trailerinterface	A2A.9	Transmission	A27.87A	Powersteering
00VA	EqualizerGnd	A2A.11	Transmission	A31J4.1	Keylessentrysystem
0W	GNDStud	A3.1	Transmission	A31J4.2	Keylessentrysystem
12Ecu	12vEngineEcu	A3.2	Transmission	A31J4.3	Keylessentrysystem
12ISH	PwrI_Shift	A3.3	Transmission	A31J4.4	Keylessentrysystem

CIRCUITS LIST

CircuitID	Description	CircuitID	Description	CircuitID	Description
A31J4.5	Keylessentrysystem	A42J1.3	FJB	A46J1.13	Frflash
A31J4.6	Keylessentrysystem	A42J1.4	FJB	A46J2.1	Fog
A31J4.7	Keylessentrysystem	A42J1.7	FJB	A46J2.4	Frheadlights
A31J4.8	Keylessentrysystem	A42J1.10	Kneeling	A46J2.7	Frheadlights
A31J5.1	Keylessentrysystem	A42J1.13	Kneeling	A46RJ1.17	Frflash
A31J5.3	Keylessentrysystem	A42J1.16	FJB	A46RJ1.18	Frflash
A34.A5	Fansdriveelectric	A42J1.18	FJB	A47J1.1	HVACdefroster
A34.B5	Fansdriveelectric	A42J2.15	FJB	A47J1.3	HVACdefroster
A34.C5	Fansdriveelectric	A43J1.1	Lugg.doorslocks	A47J1.4	HVACdefroster
A34.D5	Fansdriveelectric	A43J1.3	Lugg.doorslocks	A47J1.7	Wipersandwasher
A34.E5	Fansdriveelectric	A43J1.7	TPMS	A47J1.16	SmallA/C
A34.F5	Fansdriveelectric	A43J2.1	Lugg.doorslocks	A47J2.1	HVACdefroster
A34.G5	Fansdriveelectric	A43J2.4	Lugg.doorslocks	A47J2.4	HVACdefroster
A34.H5	Fansdriveelectric	A43J2.7	EngineECUVolvo	A47J2.15	SmallA/C
A34J.E	Fansdriveelectric	A43J2.10	EngineECUVolvo	A47RJ1.6	HVACdefroster
A34J.F	Fansdriveelectric	A43RJ1.17	ACB	A47RJ1.17	HVACdefroster
A34R.A3	Fansdriveelectric	A44J1.4	12VPowerdistributionFJB	A47RJ1.18	Wipersandwasher
A34R.B3	Fansdriveelectric	A44J1.7	Wipersandwasher	A47RJ2.2	Keylessentrysystem
A34R.C3	Fansdriveelectric	A44J1.10	Wipersandwasher	A47RJ2.3	SmallA/C
A34R.D3	Fansdriveelectric	A44J1.16	Horn	A48J1.1	Fog
A34R.E3	Fansdriveelectric	A44J1.19	Luggageslights	A48J1.3	Fog
A34R.F3	Fansdriveelectric	A44J2.1	Sunvisor	A48J1.7	Frflash
A34R.G3	Fansdriveelectric	A44J2.4	Sunvisor	A48J1.10	Frflash
A34R.H3	Fansdriveelectric	A44J2.7	Driverlight	A48J2.1	Frheadlights
A36JA.10	Ignitionandenginestart	A44J2.7.A	Driverlight	A48J2.4	Frheadlights
A36JA.11	Horn	A44J2.10	Sunvisor	A48J2.7	Driver&entracewindow
A36JA.15	Ignitionandenginestart	A44J2.13	Sunvisor	A48J2.10	Driver&entracewindow
A36JA.16	FJB	A44RJ1.17	Frflash	A48J2.13	Frflash
A36JA.17	Ignitionandenginestart	A44RJ2.2	Driverlights	A48RJ1.17	Fog
A36JA.18	Ignitionandenginestart	A44RJ2.3	Wipersandwasher	A48RJ1.18	Frflash
A36JA.25	Brake	A45J1.1	HVACdefroster	A48RJ2.2	Frflash
A40.3.Blue	Trailerinterface	A45J1.3	HVACdefroster	A49J1.1	Fansdriveelectric
A41J1.1	Keylessentrysystem	A45J1.4	Powersteering	A49J1.3	Fansdriveelectric
A41J1.3	Keylessentrysystem	A45J1.7	12VPowerdistributionFJB	A49J1.10	FullHVACpassengers
A41J1.4	Keylessentrysystem	A45J1.16	Mirrors	A49J1.17	SmallA/C
A41J1.7	Keylessentrysystem	A45J2.1	HVACdefroster	A49J1.18	SmallA/C
A41J1.16	EngineECUVolvo	A45J2.4	HVACdefroster	A49J2.1	Alternators
A41J1.19	EngineECUVolvo	A45J2.7	Driver&entracewindow	A49J2.4	SmallA/C
A41J2.2	Keylessentrysystem	A45J2.13	Driver&entracewindow	A49J2.13	Brake
A41J2.15	Keylessentrysystem	A45RJ1.17	Fog	A49J2.15	SmallA/C
A41RJ1.6	Keylessentrysystem	A46J1.1	Horn	A49RJ1.6	SmallA/C
A41RJ1.18	Keylessentrysystem	A46J1.4	Frflash	A49RJ1.18	FullHVACpassengers
A41RJ2.14	FJB	A46J1.10	Frflash	A49RJ2.2	Fansdriveelectric

CIRCUITS LIST

CircuitID	Description	CircuitID	Description	CircuitID	Description
A49RJ2.3	SmallA/C	A54J2.7	HVACPassengers	A59J2.15	Slideoutrearleft
A50J1.4	Airdryerandheater	A54J2.10	FullHVACpassengers	A59RJ1.17	Slideoutrearleft
A50J1.7	Backupwarnings	A54J2.15	FullHVACpassengers	A59RJ2.2	Slideoutrearleft
A50J1.13	Rrflashers	A54RJ1.6	FullHVACpassengers	A59RJ2.14	Slideoutrearleft
A50J1.19	Rrflashers	A54RJ1.17	FullHVACpassengers	A77.A	Equalizer
A50J2.1	Rrflashers	A54RJ1.18	FullHVACpassengers	A77.H	Equalizer
A50J2.7	Rrflashers	A54RJ2.2	FullHVACpassengers	A78.3	Equalizer
A50J2.10	Backupwarnings	A54RJ2.3	FullHVACpassengers	A78.4	Equalizer
A50RJ1.17	Rrflashers	A54RJ2.14	FullHVACpassengers	A79.3	Equalizer
A50RJ1.18	Rrflashers	A55J1.1	Driverlights	A80.3	Equalizer
A50RJ2.2	Backupwarnings	A55J1.4	Cluster	A80.4	Equalizer
A50RJ2.3	Airdryerandheater	A55J2.1	Driverlights	A81JB.4	EngineECUVolvo
A51J1.1	Fog	A55J2.15	Keylessentrysystem	A81JB.6	Powersteering
A51J1.3	Fog	A55RJ1.18	Steeringmultifunctions	A81JB.10	EngineECUVolvo
A51J1.4	Rrflashers	A56J1.3	Cluster	A81JB.15	Ignitionandenginestart
A51J1.7	Rrflashers	A56J1.4	Cluster	A81JB.16	EngineECUVolvo
A51J1.10	Rrflashers	A56J1.7	Cluster	A81JB.17	EngineECUVolvo
A51J1.13	Rrflashers	A56J1.10	Cluster	A81JB.19	EngineECUVolvo
A51J1.16	Transmission	A56J1.13	Multiplexpower	A81JB.22	EngineECUVolvo
A51J1.19	WCL	A56J2.15	Frflash	A81JB.23	EngineECUVolvo
A51J2.1	Rrflashers	A57J1.1	WCL	A81JB.26	EngineECUVolvo
A51J2.4	Transmission	A57J1.3	WCL	A96.8.Black	TPMS
A51J2.7	Rrflashers	A57J1.19		A96.23.Red	TPMS
A51J2.10	Rrflashers	A57RJ1.18		A96.24.Black	TPMS
A51RJ1.17	Rrflashers	A58J1.1	Slideoutfrontleft	A96.25.Red	TPMS
A51RJ1.18	Fog	A58J1.4	Slideoutfrontleft	A96.27.Black	TPMS
A52J1.1	Fansdriveelectric	A58J1.7	Slideoutfrontleft	A96.28.Red	TPMS
A52J1.3	Fansdriveelectric	A58J1.10	Slideoutfrontleft	A100.3.White	TPMS
A52J1.7	EngineandRJBlights	A58J1.16	Slideoutfrontleft	A101.3.White	TPMS
A52J1.10	Ignitionandenginestart	A58J1.19	Slideoutfrontleft	A102.3.White	TPMS
A52J1.13	RJBfan	A58J2.1	Slideoutfrontleft	A103.1	Steeringmultifunctions
A52J2.1	Alternators	A58J2.4	Slideoutfrontleft	A103.3	Steeringmultifunctions
A52J2.4	Alternators	A58J2.11	Slideoutfrontleft	A103.5	Horn
A52J2.13	Ignitionandenginestart	A58J2.15	Slideoutfrontleft	A108.5	Cmd_Ground
A52RJ1.17	RJB_Gnd	A58RJ1.17	Slideoutfrontleft	A130.3	Firesuppression
A52RJ1.18	EngineandRJBlights	A58RJ2.2	Slideoutfrontleft	A130.4	Firesuppression
A54J1.1	FullHVACpassengers	A58RJ2.14	Slideoutfrontleft	A130.6	Firesuppression
A54J1.3	FullHVACpassengers	A59J1.1	Slideoutrearleft	A130.8	Firesuppression
A54J1.7	FullHVACpassengers	A59J1.4	Slideoutrearleft	A130.11	Firesuppression
A54J1.10	FullHVACpassengers	A59J1.7	Slideoutrearleft	A131A.C	Firesuppression
A54J1.16	SmallA/C	A59J1.10	Slideoutrearleft	A131B.A	Firesuppression
A54J1.19	FullHVACpassengers	A59J1.16	Slideoutrearleft	A131B.C	Firesuppression
A54J2.4	FullHVACpassengers	A59J1.19	Slideoutrearleft	A137A.4	UreaSystem

CIRCUITS LIST

CircuitID	Description	CircuitID	Description	CircuitID	Description
A137A.7	UreaSystem	CB204	Fansdriveelectric	EI.7	Cluster
A137A.8	UreaSystem	CB205	Fansdriveelectric	EI.18	EngineECUVolvo
A137A.24	UreaSystem	CB206	Fansdriveelectric	EMS.EB29	Ignitionandenginestart
A137A.28	UreaSystem	CB207	Fansdriveelectric	F10	Cluster
A137A.40	UreaSystem	CB208	Fansdriveelectric	F11	Horn
A137A.44	UreaSystem	CB301.Black	Trailerinterface	F12	Keylessentrysystem
A137A.49	UreaSystem	CC16	FJB	F13	12VPowerdistributionFJB
A137A.50	UreaSystem	CC17	FJB	F14	Multiplexpower
A137A.51	UreaSystem	Cd1	Multiplexnetwork	F15	Keylessentrysystem
A137A.54	UreaSystem	CInt1	FJB	F16	12VPowerdistributionFJB
A137A.56	UreaSystem	CInt2	FJB	F18	Multiplexpower
A137A.59	UreaSystem	CInt3	FJB	F19	Multiplexpower
A137A.62	UreaSystem	CInt4	FJB	F20	Multiplexpower
A138.3	UreaSystem	CInt5	FJB	F21	Multiplexpower
A138.12	UreaSystem	CInt6	FJB	F22	ELD/ITS Gateway
Alt_LL	Alternators	CInt7	FJB	F23	ESP
Alt_UL	Alternators	CInt8	FJB	F24	12VPowerdistributionFJB
Alt_UR	Alternators	CTS	Multiplexnetwork	F25	12VOutlets
AltLL	Maindistributionpower	Cts	Multiplexnetwork	F27	Driverseat
AltUL	Alternators	D1	Ignitionandenginestart	F29	12VPowerdistributionFJB
AltUR	Maindistributionpower	D12	Horn	F30	CanIsoJ2284network
B85.2	UreaSystem	D13	Horn	F33	AirDryer
B97.2	UreaSystem	D51	Tagandlevellow	F35	Multiplexpower
B98.2	UreaSystem	D75	Slideoutfrontleft	F36	Ignitionandenginestart
B115A.3	DeltaPSignals	D82.A	Driverlight	F37	Keylessentrysystem
BussBar	12VItoCB10	D88.A	Luggageslights	F39	24VPowerdistributionFJB
CanH2	Spare	D89.A	Luggageslights	F40	Firesuppression
CanL2	Spare	DATAKH	Keylessentrysystem	F41	Multiplexpower
CB1	Maindistributionpower	DATAKL	Keylessentrysystem	F42	PwrI_Shift
CB2	Maindistributionpower	DL0H	Spare	F43	PwrI_Shift
CB3	Maindistributionpower	DL0L	Spare	F44	Multiplexpower
CB5	Maindistributionpower	DL1H	J1939network	F45	Multiplexpower
CB6	Maindistributionpower	DL1L	J1939network	F46	Multiplexpower
CB7	Maindistributionpower	DL2H	Transmission	F47	Multiplexpower
CB8	Maindistributionpower	DL2L	Transmission	F50	HVACdefroster
CB10	Maindistributionpower	DL3H	DBUSnetwork	F51	Multiplexpower
CB48	Frflash	DL3L	DBUSnetwork	F52	ELD/ITS Gateway
CB117	Trailer	DL7H	EngineECUVolvo	F53	Tagandlevellow
CB119	Trailerinteface	DL7L	EngineECUVolvo	F73	EngineECUVolvo
CB128	PowerdistributionRJB	DL100H	J1939network	F90	PowertoEcm
CB201	Fansdriveelectric	DL100L	J1939network	F91	EngineECUVolvo
CB202	Fansdriveelectric	DSO1.1	Slideoutfrontleft	F95	ELD/ITS Gateway
CB203	Fansdriveelectric	DSO2.1	Slideoutrearleft	F96	UreaSystem

CIRCUITS LIST

CircuitID	Description	CircuitID	Description	CircuitID	Description
F99	PowerdistributionRJB	Mo69.3	Fansdriveelectric	R12	FullHVACpassengers
F100	EngineECUVolvo	Mo70.3	Fansdriveelectric	R20.87	FullHVACpassengers
F101	Maindistributionpower	Mo71.3	Fansdriveelectric	R21.87	
F106	Multiplexpower	Mo72.3	Fansdriveelectric	R21.B	ISM
F107	Multiplexpower	Mo73.3	Fansdriveelectric	R22.87	Ignitionandenginestart
F108	CanIsoJ2284network	N1	Multiplexnetwork	R23.30	transmission
F109	EngineandRJBlights	N2	Multiplexnetwork	R25.87	24VI
F110	Transmission	N3	Multiplexnetwork	R27.87A	Wipersandwasher
F117	Trailer	N4	Multiplexnetwork	R29	EngineECUVolvo
F118	Trailer	N5	Multiplexnetwork	R30.87	12VPowerdistributionFJB
F119	Trailer	N6	Multiplexnetwork	R31.87	12VPowerdistributionFJB
F121	PowerdistributionRJB	N7	Multiplexnetwork	R34.30	Ignitionandenginestart
F122	24VItoMux	N8	Multiplexnetwork	R36.87	Horn
F126	FullHVACpassengers	N9	Multiplexnetwork	R37.30	Horn
F130	Windowsajar	N10	Multiplexnetwork	R38.87	12VOutlets
F131	PowerdistributionRJB	N11	Multiplexnetwork	R47.87	WCL
F132	Multiplexpower	N12	Multiplexnetwork	R51.87.Yellow	Trailerinterface
F133	Multiplexpower	N13	Multiplexnetwork	R52.87.Green	Trailerinterface
F134	Multiplexpower	N14	Multiplexnetwork	R53.30.Red	Trailerinterface
F135	Multiplexpower	N15	Multiplexnetwork	R54.87	Trailerinterface
F136	Multiplexpower	N16	Multiplexnetwork	R55.30.Brown	Trailerinterface
F139	Alternators	N17	Multiplexnetwork	R167.30	Luggageslights
F141	FullHVACpassengers	N18	Multiplexnetwork	R167.86	Luggageslights
F142	FullHVACpassengers	N19	Multiplexnetwork	R_Starter	Ignitionandenginestart
F143	FullHVACpassengers	N20	Multiplexnetwork	RSO1_1	Slideoutfrontleft
F144	FullHVACpassengers	N21	Multiplexnetwork	RSO1_2	Slideoutfrontleft
F147	PowerdistributionRJB	N22	Multiplexnetwork	RSO2_1	Slideoutrearleft
F167	Luggage_Lights	N23	Multiplexnetwork	RSO2_2	Slideoutrearleft
F199	Fansdriveelectric	N24	Multiplexnetwork	RTS	Multiplexnetwork
gnd_1	Cantrack	N27	Multiplexnetwork	Rts	Multiplexnetwork
Gnd_2	Cantrack	N28	Multiplexnetwork	RX	TPMS
GndA	Multiplexnetwork	N29	Multiplexnetwork	Rx	Cantrack
Jmp_Sw24.8	Driverlights	N30	Multiplexnetwork	RxD	Multiplexnetwork
jumper	Lugg.doorslocks	N31	Multiplexnetwork	RxTx	Multiplexnetwork
L207.1	WCL	N32	Multiplexnetwork	Se11.Sig	Cluster
L207.3	WCL	N33	Multiplexnetwork	Se11.Wrn	Cluster
L207.GND	WCL	N56-1	Multiplexnetwork	Se13.B	EngineECUVolvo
L350A.B2	EngineECUVolvo	N56-2	Multiplexnetwork	Se14A.B	EngineECUVolvo
Mo11.3	SmallA/C	N57_1	WCL	Se14B.C	EngineECUVolvo
Mo40.2	Windowsajar	N57_2	WCL	Se15.NO	Keylessentrysystem
Mo65.3	Fansdriveelectric	Pot1	Multiplexpower	Se16	Keylessentrysystem
Mo67.3	Fansdriveelectric	R6.30	Keylessentrysystem	Se17.NC	Keylessentrysystem
Mo68.3	Fansdriveelectric	R7.30	Keylessentrysystem	Se17.NO	Keylessentrysystem

CIRCUITS LIST

CircuitID	Description	CircuitID	Description	CircuitID	Description
Se18.B	Brake	Se94	WCL	Sw1C258.6	Frflash
Se19_P.D	Brake	Se94.A	WCL	Sw1C258.7	Frflash
Se19_S.D	Brake	Se100.4	WCL	Sw1C258.8	Frflash
Se20.B	Cluster	SESO2.4	Slideoutfrontleft	Sw1C259.1	Frflash
Se21.2	HVACdefroster	SESO3.2	Slideoutfrontleft	Sw1C259.2	Frflash
Se23	SmallA/C	SESO5.4	Slideoutrearleft	Sw1C259.4	Frflash
Se23.C	FullHVACpassengers	SESO6.2	Slideoutrearleft	Sw2.3	Frflash
Se23A	SmallA/C	Shield_149	gndshield	Sw2.6	Frflash
Se24.2	FullHVACpassengers	Shield_149A	GndShield	Sw3.3	Fog
Se24.3	FullHVACpassengers	So9.B	FullHVACpassengers	Sw3.8	Fog
Se25.2	FullHVACpassengers	So36	SmallA/C	Sw4.3	Frflash
Se30.A	EngineandRJBlights	spare17	Spare	Sw4.8	Frflash
Se32.A	Transmission	spare18	Spare	Sw6.4	Wipersandwasher
Se32.B	Transmission	spare19	Spare	Sw14.3	EngineECUVolvo
Se33.A	Transmission	spare20	Spare	Sw14.8	EngineECUVolvo
Se34.A	Transmission	spare21	Spare	Sw16.3	Brake
Se34.B	Transmission	spare22	Spare	Sw16.8	Brake
Se35.A	Transmission	spare23	Spare	Sw17.6	EngineECUVolvo
Se35.B	Transmission	spare24	Spare	Sw18A.2B	Lugg.doorslocks
Se37.1	ESP	spare25	Spare	Sw18A.4	Keylessentrysystem
Se37.2	ESP	spare28	Spare	Sw18A.6	Keylessentrysystem
Se38.1	ESP	spare29	Spare	Sw20.3	WCL
Se38.2	ESP	spare30	Spare	Sw20.8	WCL
Se39.1	ESP	spare31	Spare	Sw24.1	DriverandEntrancelights
Se39.2	ESP	spare32	Spare	Sw24.3	DriverandEntrancelights
Se40.1	ESP	spare33	Spare	Sw24.4	Driverlights
Se40.2	ESP	spare34	Spare	Sw24.6	Driverlights
Se45.2	Cluster	spare35	Spare	Sw24.8	Driverlights
Se46.B	Trailerparkbrake	spare39	Spare	Sw34.2B	Driver&entracewindow
Se49	FullHVACpassengers	spare40	Spare	Sw35.3	EngineECUVolvo
Se51.2	Cluster	spare41	Spare	Sw35.8	EngineECUVolvo
Se51.Jmp	Seat_Belt_Jumper	spare42	Spare	Sw38.2B	Driver&entracewindow
Se53.C	Cluster	spare43	Spare	Sw40.B	Trailerparkbrake
Se54.C	Cluster	spare44	Spare	Sw41.A1	Mirrors
Se55.C	Cluster	spare64	Spare	Sw41.A3	Mirrors
Se56.A	WCL	spare65	Spare	Sw41.B1	Mirrors
Se62.B	WCL	spare72	Spare	Sw41.B2	Mirrors
Se63.1	ESP	spare73	Spare	Sw41.B4	Mirrors
Se63.2	ESP	STO-LOCselenoid	WCL	Sw42.2	WCL
Se64.1	ESP	Sw1.5	Frflash	Sw42.3	WCL
Se64.2	ESP	Sw1C258.2	Frflash	Sw42.4	WCL
Se67.C	ESP	Sw1C258.3	Frflash	Sw42.5	WCL
Se69.C	ESP	Sw1C258.4	Frflash	Sw42.6	WCL

CIRCUITS LIST

CircuitID	Description	CircuitID	Description		
Sw42.7	WCL	Sw117	Lugg.doorslocks		
Sw44	Luggageslights	Sw122.1	HVACdefroster		
Sw46A	Engine&RJBcmpt.lights	Sw122.3	HVACdefroster		
Sw58.3	Ignitionandenginestart	Sw152.B	Firesuppression		
Sw58.5	Ignitionandenginestart	Sw156.6	Mirrors		
Sw58.7	Ignitionandenginestart	Sw156.8	Mirrors		
Sw59.3	Ignitionandenginestart	Sw157.2B	Sunvisor		
Sw63A.3	Horn	Sw158.2B	Sunvisor		
Sw63A.4	Horn	Sw165.1	DriverandEntrancelights		
Sw64	Tagandlevellow	Sw165.3	DriverandEntrancelights		
Sw82.4	Masterrelay	Sw165.4	Driverlights		
Sw82.5	Masterrelay	Sw165.6	Driverlights		
Sw83.Acc	Ignitionandenginestart	Sw167.6			
Sw83.Ign		SwSo1.4	Slideoutfrontleft		
Sw83.St	Ignitionandenginestart	SwSo1.5	Slideoutfrontleft		
Sw85.A1	Mirrors	SwSo2.4	Slideoutrearleft		
Sw85.A3	Mirrors	SwSo2.5	Slideoutrearleft		
Sw85.B1	Mirrors	TWU.3	WCL		
Sw85.B2	Mirrors	TX	TPMS		
Sw85.B4	Mirrors	Tx	Cantrack		
Sw99.3	Fog	TxD	Multiplexnetwork		
Sw102.3	Fog	ve+	Cantrack		
Sw102.8	Fog				
Sw103A.3	Backupwarnings				
Sw103A.6	Backupwarnings				
Sw104.1	Keylessentrysystem				
Sw104.3	Keylessentrysystem				
Sw104.5B	Keylessentrysystem				
Sw107.2	Tagandlevellow				
Sw107.4	Tagandlevellow				
Sw107.6	Tagandlevellow				
Sw107.8	Tagandlevellow				
Sw107.10	Tagandlevellow				
Sw108.1	Tagandlevellow				
Sw108.3	Tagandlevellow				
Sw109	Lugg.doorslocks				
Sw110	Lugg.doorslocks				
Sw111	Lugg.doorslocks				
Sw112	Lugg.doorslocks				
Sw113	Lugg.doorslocks				
Sw114	Lugg.doorslocks				
Sw115	Lugg.doorslocks				
Sw116	Lugg.doorslocks				

CIRCUITS LIST

CircuitID	Description	CircuitID	Description	CircuitID	Description
0	PowerBatteries	0TR.White	Trailerinterface	A2A.11	
0	PowerBatteries	00VA	EqualizerGnd	A3.1	Transmission
0A	12VOutlets	0W	GNDStud	A3.2	Transmission
00A	Keylessentrysystem	12Ecu	12vEngineEcu	A3.3	Transmission
0A1		12ISH	Pwrl_Shift	A3.5	Transmission
00A1	Multiplexpower	12VA	Maindistributionpower	A3.6	Transmission
00A2	eMirrors_VS	12VD	PowerBatteries	A3.7	Transmission
0AltEXTR	ChassisGnd	12VI8A	PwrtoModuleA50	A4B.8	Transmission
0AltL	ChassisGnd	24VA	Maindistributionpower	A5.B	Transmission
0AltR	ChassisGnd	24VD	PowerBatteries	A9CX1.2	Cluster
0AltUL	ChassisGnd	24VD2	Ignitionandenginestart	A9CX1.4	ESP
0B	EngineChassisGnd	24VD3	Maindistributionpower	A9CX1.5	ESP
0C	Ignitionandenginestart	24VI	24VItoRearVec	A9CX1.6	Cluster
0COND	FullHVACpassengers	26	DriverWindoPw	A9CX2.1	ESP
0ECU	EngineECUVolvo	76	24VIPreHeater	A9CX2.2	ESP
0EVAP1		136A	TransmissionPwr	A9CX2.3	ESP
0F	ChassisGnd	146A	PwrtoModuleA50	A9CX2.4	ESP
00F	GNDElectronic	290A	GndFanClutch	A9CX2.6	ESP
00F1	Multiplexpower	900	J1587network	A9CX2.7	ESP
00F2	Multiplexpower	901	J1587network	A9CX2.9	ESP
00F3		_00	PowerBatteries	A9CX2.10	ESP
00F4	FJB	A1.11	Transmission	A9CX2.12	ESP
00F5	Groundelec	A1.12	Transmission	A9CX2.13	ESP
0FDS	Driver_Seat	A1.15	Transmission	A9CX2.16	ESP
0FE		A1.16	Transmission	A9CX2.17	ESP
0FF		A1.18	Transmission	A9CX3.3	ESP
0FH	Keylessentrysystem	A1.19	Transmission	A9CX3.5	ESP
00FH	Keylessentrysystem	A1.24	Transmission	A9CX3.7	ESP
0FH1		A1.25	Transmission	A9CX3.9	ESP
00FH1	HVACdefroster	A1.31	Transmission	A9CX3.10	ESP
00FH2	Multiplexpower	A1.33	Transmission	A9CX4.1	ESP
00FR	GNDElectronic	A1.36	Transmission	A9CX4.4	ESP
0R	PowerdistributionRJB	A1.37	Transmission	A9CX4.7	ESP
00R	CanIsoJ2284network	A1.51	Transmission	A9CX4.8	ESP
00R1	Masterrelay	A1.52	Transmission	A9CX4.10	ESP
00R2	Multiplexpower	A1.54	Transmission	A9CX4.11	ESP
00R3	Multiplexpower	A1.55	Transmission	A14.A12	Cluster
00R4	Multiplexpower	A1.58	Transmission	A14.B1	Cluster
00R5	VannerCtr	A1.71	Transmission	A14.B18	Cluster
00R6	Multiplexpower	A1.74	Transmission	A14.B20	Cluster
0RAD	EngineChassisGnd	A1.76	Transmission	A14.B21	Cluster
0RAD2	Fansdriveelectric	A1.77	Transmission	A27.30	Powersteering
0TR	Trailerinterface	A2A.9		A27.87A	Powersteering

CIRCUITS LIST

CircuitID	Description	CircuitID	Description	CircuitID	Description
A31J4.1	Keylessentrysystem	A41J2.15	Keylessentrysystem	A45J1:13	Curblights
A31J4.2	Keylessentrysystem	A41RJ1.6	Keylessentrysystem	A45J1:18	Emergency&aislelights
A31J4.3	Keylessentrysystem	A41RJ1.18	Keylessentrysystem	A45J2.1	HVACdefroster
A31J4.4	Keylessentrysystem	A41RJ2.14	FJB	A45J2.4	HVACdefroster
A31J4.5	Keylessentrysystem	A42J1.3	FJB	A45J2.7	Driver&entracewindow
A31J4.6	Keylessentrysystem	A42J1.4	FJB	A45J2.13	Driver&entracewindow
A31J4.7	Keylessentrysystem	A42J1.7	FJB	A45RJ1.17	Fog,cornering,dockinglights
A31J4.8	Keylessentrysystem	A42J1.10	Kneeling,tag,lowbuoy	A45RJ1.18	
A31J5.1	Keylessentrysystem	A42J1.13	Kneeling,tag,lowbuoy	A46J1.1	Horn
A31J5.3	Keylessentrysystem	A42J1.16	FJB	A46J1.4	Frflash,markers,clearance&headlights
A34.A5	Fansdriveelectric	A42J1.18	FJB	A46J1.7	Cornering&foglights
A34.B5	Fansdriveelectric	A42J2.15	FJB	A46J1.10	Frflash,markers,clearance&headlights
A34.C5	Fansdriveelectric	A43J1.1	Lugg.doorslocks	A46J1.13	Frflash,markers,clearance&headlights
A34.D5	Fansdriveelectric	A43J1.3	Lugg.doorslocks	A46J1.20	Frflashers,markers,clearance,headlights
A34.E5	Fansdriveelectric	A43J1.7	TPMS	A46J2.1	Fog,cornering,dockinglights
A34.F5	Fansdriveelectric	A43J2.1	Lugg.doorslocks	A46J2.4	Frheadlights
A34.G5	Fansdriveelectric	A43J2.4	Lugg.doorslocks	A46J2.7	Frheadlights
A34.H5	Fansdriveelectric	A43J2.13	Keylessentrysystem	A46RJ1.17	Frflash,markers,clearance&headlights
A34J.E	Fansdriveelectric	A43RJ1.17	ACB	A46RJ1.18	Frflash,markers,clearance&headlights
A34J.F	Fansdriveelectric	A44J1.3		A47J1.1	HVACdefroster
A34R.A3	Fansdriveelectric	A44J1.4	12VPowerdistributionFJB	A47J1.3	HVACdefroster
A34R.B3	Fansdriveelectric	A44J1.7	Wipersandwasher	A47J1.4	HVACdefroster
A34R.C3	Fansdriveelectric	A44J1.10	Wipersandwasher	A47J1.7	Wipersandwasher
A34R.D3	Fansdriveelectric	A44J1.16	Horn	A47J1.16	SmallA/C
A34R.E3	Fansdriveelectric	A44J1.19	Luggageslights	A47J1.19	
A34R.F3	Fansdriveelectric	A44J1:7	EMirror	A47J2.1	HVACdefroster
A34R.G3	Fansdriveelectric	A44J2.1	Sunvisor	A47J2.4	HVACdefroster
A34R.H3	Fansdriveelectric	A44J2.4	Sunvisor	A47J2.7	
A36AJA.7		A44J2.7	Driverlight	A47J2.10	
A36AJA.8		A44J2.7.A	Driverlight	A47J2.13	
A36AJA.9		A44J2.10	Sunvisor	A47J2.15	SmallA/C
A36AJA.10		A44J2.13	Sunvisor	A47RJ1.6	HVACdefroster
A36JA.15	Ignitionandenginestart	A44J2:3		A47RJ1.17	HVACdefroster
A36JA.17	EmergencyCutoutRlySignal	A44RJ1.17	Frflash,markers,clearance&headlights	A47RJ1.18	Wipersandwasher
A36JB.2	Ignition	A44RJ2.2	Driverlights	A47RJ2.2	Keylessentrysystem
A40.3	Trailerinterface	A44RJ2.3		A47RJ2.3	SmallA/C
A40.3.Blue	Trailerinterface	A45J1.1	HVACdefroster	A48J1.1	Fog,cornering,dockinglights
A41J1.1	Keylessentrysystem	A45J1.3	HVACdefroster	A48J1.3	Fog,cornering,dockinglights
A41J1.4	Keylessentrysystem	A45J1.4	Powersteering	A48J1.4	Cornering&foglights
A41J1.7	Keylessentrysystem	A45J1.7	12VPowerdistributionFJB	A48J1.7	Frflash,markers,clearance&headlights
A41J1.16	EngineECUVolvo	A45J1.16	Mirrors	A48J1.10	Frflash,markers,clearance&headlights
A41J1.19	EngineECUVolvo	A45J1.18	Emergency&aislelights	A48J2.1	Frheadlights
A41J2.2	Keylessentrysystem	A45J1:10	Curblights	A48J2.4	Frheadlights

CIRCUITS LIST

CircuitID	Description	CircuitID	Description	CircuitID	Description
A48J2.5	Frflashers,markers,clearance,headlights	A51J2.7	Rrflashers,markers,Tail&stoplights	A56J1.10	Cluster
A48J2.7	Driver&entracewindow	A51J2.10	Rrflashers,markers,Tail&stoplights	A56J1.13	Multiplexpower
A48J2.10	Driver&entracewindow	A51RJ1.17	Rrflashers,markers,Tail&stoplights	A56J1.16	EngineECUVolvo
A48J2.13	Frflash,markers,clearance&headlights	A51RJ1.18	Fog,cornering,dockinglights	A56J1.19	eMirrors_VS
A48RJ1.17	Fog,cornering,dockinglights	A52J1.1	Fansdriveelectric	A56J2.15	Frflash,markers,clearance&headlights
A48RJ1.18	Frflash,markers,clearance&headlights	A52J1.3	Fansdriveelectric	A57J1.1	WCL
A48RJ2.2	Frflash,markers,clearance&headlights	A52J1.7	EngineandRJBlights	A57J1.3	WCL
A49J1.1	Fansdriveelectric	A52J1.10	Ignitionandenginestart	A57J1.19	
A49J1.3	Fansdriveelectric	A52J1.13	RJBfan	A57RJ1.18	
A49J1.10	FullHVACpassengers	A52J2.1	Alternators	A58J1.1	Slideoutfrontleft
A49J1.17	SmallA/C	A52J2.4	Alternators	A58J1.4	Slideoutfrontleft
A49J1.18	SmallA/C	A52J2.13	Ignitionandenginestart	A58J1.7	Slideoutfrontleft
A49J2.1	Alternators	A52RJ1.17	RJB_Gnd	A58J1.10	Slideoutfrontleft
A49J2.4	SmallA/C	A52RJ1.18	EngineandRJBlights	A58J1.16	Slideoutfrontleft
A49J2.13	Brake,enginebrake&retarder	A53J1.10	Curblights	A58J1.19	Slideoutfrontleft
A49J2.15	SmallA/C	A53RJ1.18		A58J2.1	Slideoutfrontleft
A49RJ1.6	SmallA/C	A54J1.1	FullHVACpassengers	A58J2.4	Slideoutfrontleft
A49RJ1.18	FullHVACpassengers	A54J1.3	FullHVACpassengers	A58J2.11	Slideoutfrontleft
A49RJ2.2	Fansdriveelectric	A54J1.7	FullHVACpassengers	A58J2.15	Slideoutfrontleft
A49RJ2.3	SmallA/C	A54J1.10	FullHVACpassengers	A58RJ1.17	Slideoutfrontleft
A50J1.4	Airdryerandheater	A54J1.16	SmallA/C	A58RJ2.2	Slideoutfrontleft
A50J1.7	Backupwarnings	A54J1.19	FullHVACpassengers	A58RJ2.14	Slideoutfrontleft
A50J1.10	SmallA/C	A54J2.4	FullHVACpassengers	A59J1.1	Slideoutrearleft
A50J1.13	Rrflashers,markers,Tail&stoplights	A54J2.7	HVACPassengers	A59J1.4	Slideoutrearleft
A50J1.18	SmallA/C	A54J2.10	FullHVACpassengers	A59J1.7	Slideoutrearleft
A50J1.19	Rrflashers,markers,Tail&stoplights	A54J2.15	FullHVACpassengers	A59J1.10	Slideoutrearleft
A50J2.1	Rrflashers,markers,Tail&stoplights	A54RJ1.6	FullHVACpassengers	A59J1.16	Slideoutrearleft
A50J2.7	Rrflashers,markers,Tail&stoplights	A54RJ1.17	FullHVACpassengers	A59J1.19	Slideoutrearleft
A50J2.10	Backupwarnings	A54RJ1.18	FullHVACpassengers	A59J2.15	Slideoutrearleft
A50RJ1.17	Rrflashers,markers,Tail&stoplights	A54RJ2.2	FullHVACpassengers	A59RJ1.17	Slideoutrearleft
A50RJ1.18	Rrflashers,markers,Tail&stoplights	A54RJ2.3	FullHVACpassengers	A59RJ2.2	Slideoutrearleft
A50RJ2.2	Backupwarnings	A54RJ2.14	FullHVACpassengers	A59RJ2.14	Slideoutrearleft
A50RJ2.3	Airdryerandheater	A55J1.1	Driverlights	A77.A	Equalizer
A51J1.1	Fog,cornering,dockinglights	A55J1.4	Cluster	A77.H	Equalizer
A51J1.3	Fog,cornering,dockinglights	A55J1.7	Reverse_Signal	A78.3	Equalizer
A51J1.4	Rrflashers,markers,Tail&stoplights	A55J1.13		A78.4	Equalizer
A51J1.7	Rrflashers,markers,Tail&stoplights	A55J2.1	DriverLights	A79.3	Equalizer
A51J1.10	Rrflashers,markers,Tail&stoplights	A55J2.15	Keylessentrysystem	A80.3	Equalizer
A51J1.13	Rrflashers,markers,Tail&stoplights	A55RJ1.6		A80.4	Equalizer
A51J1.16	Transmission	A56J1.1	EngineECUVolvo	A81CN3A.3	EngineECUVolvo
A51J1.19	WCL	A56J1.3	Cluster	A81CN3A.4	Ignitionandenginestart
A51J2.1	Rrflashers,markers,Tail&stoplights	A56J1.4	Cluster	A81CN3A.5	EngineECUVolvo
A51J2.4	Transmission	A56J1.7	Cluster	A81CN3A.9	EngineECUVolvo

CIRCUITS LIST

CircuitID	Description	CircuitID	Description	CircuitID	Description
A81CN3B.26	EngineECUVolvo	AltUR	Maindistributionpower	CB206	Fansdriveelectric
A81CN3B.27		ANT_A_CANH		CB207	Fansdriveelectric
A81CN3B.28	EngineECUVolvo	ANT_A_CANL		CB208	Fansdriveelectric
A81CN3B.35	EngineECUVolvo	ANT_A_GND		CB301	Trailerinterface
A81CN3B.36		ANT_A_PWR		CB301.Black	Trailerinterface
A81JB.6	Powersteering	ANT_B_CANH		CC16	FJB
A81JB.15	Ignitionandenginestart	ANT_B_CANL		CC17	FJB
A103.1	Steeringmultifunctions	ANT_B_GND		CInt1	FJB
A103.3	Steeringmultifunctions	ANT_B_PWR		CInt2	FJB
A103.4	Steeringmultifunctions	ANT_C_CANH		CInt3	FJB
A103.5	Horn	ANT_C_CANL		CInt4	FJB
A108.5	Cmd_Ground	ANT_C_GND		CInt5	FJB
A130.3		ANT_C_PWR		CInt6	FJB
A130.4	Firesuppression	B85.2	UreaSystem	CInt7	FJB
A130.6		B97.2	UreaSystem	CInt8	FJB
A130.8	Firesuppression	B98.2	UreaSystem	D1	Ignitionandenginestart
A130.11		B99.2		D3.2	Trailerinterface
A131A.C	Firesuppression	B115A.3	DeltaPSignals	D6	
A131B.A	Firesuppression	BLU		D12	Horn
A131B.C	Firesuppression	BRN/RHFlasher		D13	Horn
A137A.4	UreaSystem	BussBar	12VItoCB10	D51	Tagandlevellow
A137A.7	UreaSystem	CAN_Hi	eMirrors_VS	D75	Slideoutfrontleft
A137A.8	UreaSystem	CAN_Low	eMirrors_VS	D82.A	Driverlight
A137A.24	UreaSystem	CanH2	Spare	D88.A	Luggageslights
A137A.28	UreaSystem	CanL2	Spare	D89.A	Luggageslights
A137A.40	UreaSystem	CB1	Maindistributionpower	DATAKH	Keylessentrysystem
A137A.44	UreaSystem	CB2	Maindistributionpower	DATAKL	Keylessentrysystem
A137A.49	UreaSystem	CB3	Maindistributionpower	DCIN+	
A137A.50	UreaSystem	CB5	Maindistributionpower	DL0H	
A137A.51	UreaSystem	CB6	Maindistributionpower	DL0HA	
A137A.54	UreaSystem	CB7	Maindistributionpower	DL0HB	
A137A.56	UreaSystem	CB8	Maindistributionpower	DL0L	
A137A.59	UreaSystem	CB9	UreaSystem	DL0LA	
A137A.62	UreaSystem	CB10	Maindistributionpower	DL0LB	
A138.3	UreaSystem	CB48	Frflash,markers,clearance&headlights	DL1H	J1939network
A138.12	UreaSystem	CB117	Trailer	DL1L	J1939network
ACC		CB119	Trailerinteface	DL2H	
AE56J2.13	Driver&entracewindow	CB128	PowerdistributionRJB	DL2L	
Alt_LL	Alternators	CB201	Fansdriveelectric	DL3H	DBUSnetwork
Alt_UL	Alternators	CB202	Fansdriveelectric	DL3L	DBUSnetwork
Alt_UR	Alternators	CB203	Fansdriveelectric	DL7H	EngineECUVolvo
AltLL	Maindistributionpower	CB204	Fansdriveelectric	DL7L	EngineECUVolvo
AltUL	Alternators	CB205	Fansdriveelectric	DL11H	

CIRCUITS LIST

CircuitID	Description	CircuitID	Description	CircuitID	Description
DL11L		F55		L207.1	WCL
DL100H	J1939network	F57		L207.3	WCL
DL100L	J1939network	F58/F57	Driver_Seat	L207.GND	WCL
DSO1.1	Slideoutfrontleft	F73	EngineECUVolvo	L350A.B2	EngineECUVolvo
DSO2.1	Slideoutrearleft	F90	PowertoEcm	Mo11.3	SmallA/C
EI.7	Cluster	F91	EngineECUVolvo	Mo40.2	Windowsajar
EI.18	EngineECUVolvo	F95		Mo65.3	Fansdriveelectric
EMS.EB29	Ignitionandenginestart	F96		Mo67.3	Fansdriveelectric
F10	Cluster	F99	PowerdistributionRJB	Mo68.3	Fansdriveelectric
F11	Horn	F101	Maindistributionpower	Mo69.3	Fansdriveelectric
F12	Keylessentrysystem	F106	Multiplexpower	Mo70.3	Fansdriveelectric
F13	12VPowerdistributionFJB	F107	Multiplexpower	Mo71.3	Fansdriveelectric
F14	Multiplexpower	F108	CanIsoJ2284network	Mo72.3	Fansdriveelectric
F15	Keylessentrysystem	F109	EngineandRJBlights	Mo73.3	Fansdriveelectric
F16	12VPowerdistributionFJB	F110	Transmission	N1	Multiplexnetwork
F18	Multiplexpower	F117		N2	Multiplexnetwork
F19	Multiplexpower	F118	Trailer	N3	Multiplexnetwork
F20	Multiplexpower	F119		N4	Multiplexnetwork
F21	Multiplexpower	F121	PowerdistributionRJB	N5	Multiplexnetwork
F22		F122	24VItoMux	N6	Multiplexnetwork
F23	ESP	F126	FullHVACpassengers	N7	Multiplexnetwork
F24	12VPowerdistributionFJB	F130	Windowsajar	N8	Multiplexnetwork
F25	12VOutlets	F131	PowerdistributionRJB	N9	Multiplexnetwork
F27	Driverseat	F132	Multiplexpower	N10	Multiplexnetwork
F29	12VPowerdistributionFJB	F133	Multiplexpower	N11	Multiplexnetwork
F30	CanIsoJ2284network	F134	Multiplexpower	N12	Multiplexnetwork
F33		F135	Multiplexpower	N13	Multiplexnetwork
F35		F136	Multiplexpower	N14	Multiplexnetwork
F36	Ignitionandenginestart	F139	Alternators	N15	Multiplexnetwork
F37	Keylessentrysystem	F141	FullHVACpassengers	N16	Multiplexnetwork
F39	24VPowerdistributionFJB	F142	FullHVACpassengers	N17	Multiplexnetwork
F40	Firesuppression	F143	FullHVACpassengers	N18	Multiplexnetwork
F41	Multiplexpower	F144	FullHVACpassengers	N19	Multiplexnetwork
F42	Pwrl_Shift	F147	PowerdistributionRJB	N20	Multiplexnetwork
F43	Pwrl_Shift	F149	UreaSystem	N21	Multiplexnetwork
F44	Multiplexpower	F167	Luggage_Lights	N22	Multiplexnetwork
F45	Multiplexpower	F199	Fansdriveelectric	N23	Multiplexnetwork
F46	Multiplexpower	gnd_1	Cantrack	N24	Multiplexnetwork
F47		Gnd_2	Cantrack	N27	Multiplexnetwork
F50	HVACdefroster	GRN/SPEED		N28	Multiplexnetwork
F51	Multiplexpower	Jmp_Sw24.6	DriversLights	N30	Multiplexnetwork
F52		Jmp_Sw24.6.	DriversLights	N31	Multiplexnetwork
F53	Tagandlevellow	jumper	Lugg.doorslocks	N32	Multiplexnetwork

CIRCUITS LIST

CircuitID	Description	CircuitID	Description	CircuitID	Description
N33	Multiplexnetwork	R_Starter	Ignitionandenginestart	Se40.2	ESP
N56-1	Multiplexnetwork	RSO1_1	Slideoutfrontleft	Se45.2	Cluster
N56-2	Multiplexnetwork	RSO1_2	Slideoutfrontleft	Se46.B	Trailerparkbrake
N57_1	WCL	RSO2_1	Slideoutrearleft	Se49	FullHVACpassengers
N57_2	WCL	RSO2_2	Slideoutrearleft	Se51.2	Cluster
ORA/LHFlasher		Rx	Cantrack	Se51.Jmp	Seat_Belt_Jumper
Pot1		Se2		Se53.C	Cluster
Pot1	Multiplexpower	Se2A		Se54.C	Cluster
R6.30	Keylessentrysystem	Se11.Sig	Cluster	Se55.C	Cluster
R6A.30	Keylessentrysystem	Se11.Wrn	Cluster	Se56.A	
R12	FullHVACpassengers	Se13.B	EngineECUVolvo	Se57.C	
R21.87		Se14A.B	EngineECUVolvo	Se62.B	WCL
R21.B		Se14B.C	EngineECUVolvo	Se63.1	ESP
R22.87	Ignitionandenginestart	Se15.NO	Keylessentrysystem	Se63.2	ESP
R23.30		Se16	Keylessentrysystem	Se64.1	ESP
R23A.87	EngineECUVolvo	Se17.NC	Keylessentrysystem	Se64.2	ESP
R25.87	24VI	Se17.NO	Keylessentrysystem	Se67.C	ESP
R27.87A	Wipersandwasher	Se18.B		Se69.C	ESP
R29	EngineECUVolvo	Se19_P.D	Brake,enginebrake&retarder	Se89.A	
R30.87	12VPowerdistributionFJB	Se19_S.D		Se94	WCL
R31.87	12VPowerdistributionFJB	Se20.B	Cluster	Se94.A	WCL
R34.30	Ignitionandenginestart	Se21.2	HVACdefroster	Se100.4	WCL
R35.30		Se23	SmallA/C	SESO2.4	Slideoutfrontleft
R36.87	Horn	Se23.C	FullHVACpassengers	SESO3.2	Slideoutfrontleft
R37.30	Horn	Se23A	SmallA/C	SESO5.4	Slideoutrearleft
R38.87	12VOutlets	Se24.2	FullHVACpassengers	SESO6.2	Slideoutrearleft
R47.87	WCL	Se24.3	FullHVACpassengers	Shield_149	
R51.87	Trailerinterface	Se25.2	FullHVACpassengers	Shield_149A	
R51.87.Yellow	Trailerinterface	Se30.A	EngineandRJBlights	So9.B	FullHVACpassengers
R52.87	Trailerinteface	Se32.A	Transmission	So36	SmallA/C
R52.87.Green	Trailerinterface	Se32.B	Transmission	spare17	Spare
R53.30	Trailerinterface	Se33.A	Transmission	spare18	Spare
R53.30.Red	Trailerinterface	Se34.A	Transmission	spare19	Spare
R54.87		Se34.B	Transmission	spare20	Spare
R55.30	Trailerinterface	Se35.A	Transmission	spare21	Spare
R55.30.Brown	Trailerinterface	Se35.B	Transmission	spare22	Spare
R167.30	Luggageslights	Se37.1	ESP	spare23	Spare
R167.86		Se37.2	ESP	spare24	Spare
R622.85	Frflashers,markers,clearance,headlights	Se38.1	ESP	spare25	Spare
R622.87	eMirrors_VS	Se38.2	ESP	spare28	Spare
R623.85	Frflashers,markers,clearance,headlights	Se39.1	ESP	spare29	Spare
R623.87	eMirrors_VS	Se39.2	ESP	spare30	Spare
R624.87	Cust_Adapt_Interface	Se40.1	ESP	spare31	Spare

CIRCUITS LIST

CircuitID	Description	CircuitID	Description	CircuitID	Description
spare32	Spare	Sw24.3	DriverandEntrancelights	Sw103A.3	Backupwarnings
spare33	Spare	Sw24.4	Driverlights	Sw103A.6	Backupwarnings
spare34	Spare	Sw24.6	Driverlights	Sw104.1	Keylessentrysystem
spare35	Spare	Sw24.8	DriverLights	Sw104.3	Keylessentrysystem
spare39	Spare	Sw34.2B	Driver&entracewindow	Sw104.5B	Keylessentrysystem
spare40	Spare	SW34A.3	Driver&entracewindow	Sw107.2	Tagandlevellow
spare41	Spare	SW34A.4	Driver&entracewindow	Sw107.4	Tagandlevellow
spare42	Spare	Sw35.3	EngineECUVolvo	Sw107.6	Tagandlevellow
spare43	Spare	Sw35.8	EngineECUVolvo	Sw107.8	Tagandlevellow
spare44	Spare	Sw38.2B	Driver&entracewindow	Sw107.10	Tagandlevellow
spare64	Spare	Sw40.B	Trailerparkbrake	Sw108.1	Tagandlevellow
spare65	Spare	Sw41.A1	Mirrors	Sw108.3	Tagandlevellow
spare72	Spare	Sw41.A3	Mirrors	Sw109	Lugg.doorslocks
spare73	Spare	Sw41.B1	Mirrors	Sw110	Lugg.doorslocks
STO-LOCselenoid	WCL	Sw41.B2	Mirrors	Sw111	Lugg.doorslocks
Sw1.5	Frflash,markers,clearance&headlights	Sw41.B4	Mirrors	Sw112	Lugg.doorslocks
Sw1C258.2	Frflash,markers,clearance&headlights	Sw42.2	WCL	Sw113	Lugg.doorslocks
Sw1C258.3	Frflash,markers,clearance&headlights	Sw42.3	WCL	Sw114	Lugg.doorslocks
Sw1C258.4	Frflash,markers,clearance&headlights	Sw42.4	WCL	Sw115	Lugg.doorslocks
Sw1C258.6	Frflash,markers,clearance&headlights	Sw42.5	WCL	Sw116	Lugg.doorslocks
Sw1C258.7	Frflash,markers,clearance&headlights	Sw42.6	WCL	Sw117	Lugg.doorslocks
Sw1C258.8	Frflash,markers,clearance&headlights	Sw42.7	WCL	Sw122.1	HVACdefroster
Sw1C259.1	Frflash,markers,clearance&headlights	Sw44	Luggageslights	Sw122.3	HVACdefroster
Sw1C259.2	Frflash,markers,clearance&headlights	Sw46A	Engine&RJBcmpt.lights	Sw122.5B	
Sw1C259.4	Frflash,markers,clearance&headlights	Sw58.3	Ignitionandenginestart	Sw152.B	Firesuppression
Sw2.3	Frflash,markers,clearance&headlights	Sw58.5		SW156.6	
Sw2.6	Frflash,markers,clearance&headlights	Sw58.7	Ignitionandenginestart	Sw156.6	Mirrors
Sw3.3	Fog,cornering,dockinglights	Sw59.3	Ignitionandenginestart	Sw156.8	Mirrors
Sw3.8	Fog,cornering,dockinglights	Sw63A.3	Horn	Sw157.2B	Sunvisor
Sw4.3		Sw63A.4	Horn	Sw158.2B	Sunvisor
Sw4.8	Frflash,markers,clearance&headlights	Sw64	Tagandlevellow	Sw161.5B	
Sw6.4	Wipersandwasher	Sw82.5	Masterrelay	Sw165.1	DriverandEntrancelights
Sw14.3	EngineECUVolvo	Sw83.Acc		Sw165.3	DriverandEntrancelights
Sw14.8	EngineECUVolvo	Sw83.Ign		Sw165.4	Driverlights
Sw16.3	Brake,enginebrake&retarder	Sw83.St		Sw165.6	Driverlights
Sw16.8	Brake,enginebrake&retarder	Sw85.A1	Mirrors	Sw167.6	
Sw17.6	EngineECUVolvo	Sw85.A3	Mirrors	Sw221.3	eMirrors_VS
Sw18A.2B	Lugg.doorslocks	Sw85.B1	Mirrors	SwSo1.4	Slideoutfrontleft
Sw18A.4	Keylessentrysystem	Sw85.B2	Mirrors	SwSo1.5	Slideoutfrontleft
Sw18A.6	Keylessentrysystem	Sw85.B4	Mirrors	SwSo2.4	Slideoutrearleft
Sw20.3	WCL	Sw99.3	Fog,cornering,dockinglights	SwSo2.5	Slideoutrearleft
Sw20.8	WCL	Sw102.3	Fog,cornering,dockinglights	TWU.3	WCL
Sw24.1	DriverandEntrancelights	Sw102.8	Fog,cornering,dockinglights	Tx	Cantrack

CIRCUITS LIST

CircuitID	Description				
ve+	Cantrack				

Breakers list

Circuit ID	Location	Part #	Function	Rating	Page
CB1	RJB	563708	24WUP Main distribution FJB	90 amp	3.1_Main_Disti 2 C
CB2	RJB	568113	12VD Main distribution FJB & Ignition Start	70 amp	3.1_Main_Disti 2 C
CB3	RJB	563708	24WUP Main distribution power full A/C	90 amp	3.1_Main_Disti 2 C
CB5	RJB	563708	24WUP Main distribution RJB	90 amp	3.1_Main_Disti 3 C
CB6	RJB	568113	24VD Main distribution RJB	70 amp	3.1_Main_Disti 2 C
CB7	RJB	568127	24WUP Main distribution RJB	50 amp	3.1_Main_Disti 3 C
CB8	RJB	563708	12WUP Main distribution RJB	90 amp	3.1_Main_Disti 3 C
CB10	RJB	568114	12WUP Main distribution FJB	150 amp	3.1_Main_Disti 3 C
CB48	FJB_VECF	564464	24WUP Power to Front lighting & Wipers	20 amp	4.2_Dist_24V_FJB 2 C
CB128	FJB_VECF	564342	24VD Power to FJB	20 amp	5.1_Dist_RJB 1 C

BREAKERS LIST

No	Location	Part #	Function	Rating	Page
CB1	RJB	563708	24WUP	90amp	3.1
CB2	RJB	568113	12VD	70amp	3.1
CB3	RJB	563708	EvapFan	90amp	3.1
CB5	RJB	563708	24WUP	90amp	3.1
CB6	RJB	568113	24VD/WCL	70amp	3.1
CB7	RJB	568127	FANCond	50amp	3.1
CB8	RJB	563708	12WupRJB	90amp	3.1
CB10	RJB	568114	12WupFJB	150amp	3.1
CB48	FJB_VECF	564464	Wipers	20amp	4.2
CB128	FJB_VECF	564342	24VDFJB	20amp	5.1
CB301	VECT	564399	Trailerpower	20amp	26.4

BREAKERS LIST

No	Location	Part #	Function	Rating	Page						
CB1	RJB	563708	24WUP	90amp	3.1						
CB2	RJB	568113	12VD	70amp	3.1						
CB3	RJB	563708	FullAC	90amp	3.1						
CB5	RJB	564902	24WUP	120amp	3.1						
CB6	RJB	568113	24VD/WCL	70amp	3.1						
CB7	RJB	568127	FANCond	50amp	3.1						
CB8	RJB	563708	12WupRJB	90amp	3.1						
CB10	RJB	568114	12WupFJB	150amp	3.1						
CB48	FJB_VECF	564464	Wipers	20amp	4.2						
CB128	FJB_VECF	564342	24VDFJB	20amp	5.1						
CB301	VECT	564399	Trailerpower	20amp	26.4						

BREAKERS LIST

No	Location	Part #	Function	Rating	Page						
CB1	RJB	564675	24WUP	90amp	3.1						
CB2	RJB	564674	12VD	70amp	3.1						
CB3	RJB	564675	FullA/C	90amp	3.1						
CB5	RJB	564902	24WUP	120amp	3.1						
CB6	RJB	564674	24VD/WCL	70amp	3.1						
CB7	RJB	564678	SmallA/C	50amp	3.1						
CB8	RJB	564675	12WupRJB	90amp	3.1						
CB9	RJB	564672	UREE	70amp	3.1						
CB10	RJB	564677	12WupFJB	150amp	3.1						
CB48	FJB_VECF	564464	Wipers	20amp	4.2						
CB117	FJB_VECF	564399	Trailer	20amp	5.1						
CB119	RJB_VECR	564342	Trailer	30amp	5.1						
CB128	FJB_VECF	564342	24VDFJB	20amp	5.1						
CB301	VECT	564399	Trailerpower	20amp	26.4						

Connectors list

No	Location	Part no	Gender	No	Location	Part no	Gender
A1	RJB	563975	male	A36.JC	FJB	562957	male
A2	FJB	563984	male	A77	Parcel rack	564547	male
A3	Dash	562363	male	A78	Parcel rack	562583	female
A4.A	Service_Cmpt	562428	female	A79	Parcel rack	562583	female
A4.B	Service_Cmpt	561188	female	A80	Parcel rack	562479	female
A5	Service_Cmpt	562428	female	A81.JA	FJB	562767	male
A6	Engine_Cmpt	562427	male	A81.JB	FJB	562765	male
A7	Rear_Axle_Cmpt	563979	male	A81.JC	FJB	562957	male
A9.Cx1	FJB	564041	female	A83	Parcel rack	565970	female
A9.Cx2	FJB	563678	male	A96	FJB	564073	female
A9.Cx3	FJB	564037	female	A97	Dash	563226	male
A9.Cx4	FJB	564038	female	A97A	FJB	563226	male
A14.A	Dash	562766	male	A97A	FJB	563613	female
A14.B	Dash	562767	male	A97B	FJB	563226	male
A14.C	Dash	562765	male	A97B	FJB	563613	female
A15	Dash	562464	male	A100	Front_Axle_Cmpt	563758	female
A18.J1	FJB	562794	male	A101	Rear_RH_Axle_Cmpt	563758	female
A18.J2	FJB	562650	male	A102	Rear_RH_Axle_Cmpt	563758	female
A24.A	RH_Console	561890	male	A103	Dash	562070	female
A24.B	RH_Console	561566	female	A106	Dash	565974	male
A24.C	RH_Console	561889	female	A114A	Dash	564252	male
A27	Service_Cmpt	562929	male	A130	Driver_Area	563226	male
A28	Service_Cmpt	562928	male	A131.A	Engine_Cmpt	561782	male
A30.A	Dash	561611	male	A131.B	Engine_Cmpt	561781	female
A30.C	Dash	561889	female	A137A	Cond_Cmpt	20429843	male
A31.J1	Dash	562780	male	A138	Cond_Cmpt	563787	male
A31.J2	Dash	562842	male	A139	Dash	564501	male
A31.J3	Dash	562464	male	AE41.J1	FJB	563679	male
A31.J4	Dash	562465	male	AE41.J2	FJB	564037	female
A31.J5	Dash	563071	male	AE41.J3	FJB	564004	male
A34.A	Dash	564258	male	AE42.J1	FJB	563679	male
A34.B	Dash	564258	male	AE42.J2	FJB	564037	female
A34.C	Dash	564258	male	AE42.J3	FJB	564004	male
A34.D	Dash	564258	male	AE43.J1	FJB	563679	male
A34.E	Dash	564258	male	AE43.J2	FJB	564037	male
A34.F	Dash	564258	male	AE43.J3	FJB	565957	male
A34.G	Dash	564258	male	AE44.J1	FJB	563679	male
A34.H	Dash	564258	male	AE44.J2	FJB	564037	female
A34.J	Dash	568118	male	AE44.J3	FJB	565957	male
A34.K	Dash	564270	male	AE45.J1	FJB	563679	male
A34.L	Dash	564269	male	AE45.J2	FJB	564037	female
A36.JA	FJB	562767	male	AE45.J3	FJB	565957	male
A36.JB	FJB	562765	male	AE46.J1	FJB	563679	male

Connectors list

No	Location	Part no	Gender	No	Location	Part no	Gender
AE46.J2	FJB	564037	female	AltUR.C	Engine_Cmpt	564469	female
AE46.J3	FJB	565957	male	B85	Engine_Cmpt	563815	male
AE47.J1	RH_console	563679	male	B96	Engine_Cmpt	563821	male
AE47.J2	RH_console	564037	female	B96B	Engine_Cmpt	563823	male
AE47.J3	RH_console	565957	male	B97	Engine_Cmpt	563816	male
AE48.J1	RH_console	563679	male	B98	Engine_Cmpt	563817	male
AE48.J2	RH_console	564037	female	B115A	Engine cmpt.	564226	male
AE48.J3	RH_console	565957	male	B142C	Engine cmpt.	563793	male
AE49.J1	RJB	563679	male	B310	Engine cmpt.	565967	male
AE49.J2	RJB	564037	male	C1	FJB	563589	male
AE49.J3	RJB	565957	male	C1	FJB	563590	female
AE50.J1	RJB	563679	male	C1S	FJB	563589	male
AE50.J2	RJB	564037	male	C1S	FJB	563590	female
AE50.J3	RJB	565957	male	C2	Service_Cmpt	563580	male
AE51.J1	RJB	563679	male	C2	Service_Cmpt	563581	female
AE51.J2	RJB	564037	female	C2A	FJB	563580	male
AE51.J3	RJB	565957	male	C2A	FJB	563581	female
AE52.J1	RJB	563679	male	C3_plug	RJB	563589	male
AE52.J2	RJB	564037	female	C3_socket	RJB	563590	female
AE52.J3	RJB	565957	male	C3S	RJB	563593	male
AE54.J1	Evaporator cmpt.	563679	male	C3S	RJB	563590	female
AE54.J2	Evaporator cmpt.	564037	female	C4	FJB	563580	male
AE54.J3	Evaporator cmpt.	565957	male	C4	FJB	563581	female
AE55.J1	Dash	563679	male	C5	FJB	563589	male
AE55.J2	Dash	564037	female	C5	FJB	563590	female
AE55.J3	Dash	564004	male	C5S	FJB	563589	male
AE56.J1	Dash	563679	male	C5S	FJB	563590	female
AE56.J2	Dash	564037	male	C6	FJB	563582	male
AE56.J3	Dash	564004	male	C6	FJB	563583	female
AE58.J1	Slide out cmpt.	563679	male	C7	Service_Cmpt	562566	male
AE58.J2	Slide out cmpt.	564037	male	C7	Service_Cmpt	562565	female
AE58.J3	Slide out cmpt.	565957	male	C8	FJB	563227	male
AE59.J1	Slide out cmpt.	563679	male	C8	FJB	563614	female
AE59.J2	Slide out cmpt.	564037	male	C9	RJB	561986	male
AE59.J3	Slide out cmpt.	565957	male	C9	RJB	561987	female
AltLL.A	Engine_Cmpt	563746	female	C10	Engine_Cmpt	562477	male
AltLL.B	Engine_Cmpt	560815	female	C10	Engine_Cmpt	562479	female
AltLL.C	Engine_Cmpt	564469	female	C11	Service_Cmpt	563580	male
AltUL.A	Engine_Cmpt	563746	female	C11	Service_Cmpt	563581	female
AltUL.B	Engine_Cmpt	560815	female	C12	Engine_Cmpt	562581	male
AltUL.C	Engine_Cmpt	564469	female	C12	Engine_Cmpt	562583	female
AltUR.A	Engine_Cmpt	563746	female	C13_plug	RH_Console	563589	male
AltUR.B	Engine_Cmpt	560815	female	C13_socket	RH_Console	563590	female

Connectors list

No	Location	Part no	Gender	No	Location	Part no	Gender
C13S	RH_Console	563589	male	C37	Parcel_Rack_LH	562558	female
C13S	RH_Console	563590	female	C38	Parcel rack	562555	male
C14	Dash	562581	male	C38	Parcel rack	562556	female
C14	Dash	562583	female	C39A	Fire suppression cmpt.	561782	male
C15A	Evapotator cmpt.	568110	male	C39A	Fire suppression cmpt.	561781	female
C15A	Evaporatot cmpt.	568109	female	C40	Dash	562485	male
C16	RJB	561577	male	C40	Dash	562486	female
C16	RJB	561605	female	C44_plug	FJB	561577	male
C17	RJB	560195	male	C44_socket	FJB	561605	female
C17	RJB	560169	female	C45	FJB	561643	male
C18	FJB	561986	male	C45	FJB	561642	female
C18	FJB	561987	female	C46	3rd lugg. cmpt.	562549	male
C19	RJB	561986	male	C46	3rd lugg. cmpt.	562550	female
C19	RJB	561987	female	C49	FJB	562005	male
C20B	Evap_Cmpt	562485	male	C49	FJB	561714	female
C20B	Evap_Cmpt	562486	female	C50	RJB	563226	male
C23	Evapotator cmpt.	564034	male	C50	RJB	563613	female
C23	Evaporatot cmpt.	564035	female	C51	Engine cmpt.	564034	male
C24_plug	Evap_Cmpt	561690	male	C51	Evap_Cmpt	560034	female
C24_socket	Evap_Cmpt	561566	female	C52	Evap_Cmpt	563618	male
C25	Parcel_Rack_LH	561550	male	C52	Evap_Cmpt	563616	female
C25	Parcel_Rack_LH	561667	female	C54	Engine cmpt.	563226	male
C26	Urea cmpt.	563226	male	C54	Engine cmpt.	563613	female
C26	Urea cmpt.	563613	female	C54A	Urea cmpt.	568110	male
C26A	Urea cmpt.	568110	male	C54A	Urea cmpt.	568109	female
C26A	Urea cmpt.	568109	female	C54B	Engine cmpt.	563589	male
C26B	Urea cmpt.	563227	male	C54B	Engine cmpt.	563590	female
C26B	Urea cmpt.	563614	female	C58	Evap_Cmpt	564567	male
C29	4rd_Lugg_Cmpt	563651	male	C58	Evap_Cmpt	564568	female
C29	4rd_Lugg_Cmpt	563652	female	C59	Condensor cmpt.	561643	male
C30	3rd_Lugg_Cmpt	561710	male	C59	Condensor cmpt.	561642	female
C30	3rd_Lugg_Cmpt	561709	female	C61	Fr_Service_Door	561669	male
C31W	Parcel rack	561515	male	C61	Fr_Service_Door	561670	female
C31W	Parcel rack	561552	female	C62	Fr_Service_Door	562566	male
C32	lavatory	561734	male	C62	Fr_Service_Door	562565	female
C32	Lavatory	561735	female	C64	Engine cmpt.	568110	male
C32W	WCL cmpt.	561640	male	C64	Engine cmpt.	568109	female
C32W	WCL cmpt.	561639	female	C70	FJB	562557	male
C33	WCL cmpt.	564034	male	C70	FJB	562558	female
C33	WCL cmpt.	564035	female	C70A	FJB	561637	male
C34	RH_Console	561986	male	C70A	FJB	561636	female
C34	RH_Console	561987	female	C71	FJB	561646	male
C37	Parcel_Rack_LH	562557	male	C71	FJB	561645	female

Connectors list

No	Location	Part no	Gender	No	Location	Part no	Gender
C72	FJB	561646	male	C102A	Evaporator cmpt.	563613	female
C72	FJB	561645	female	C103_plug	FJB	562485	male
C74	FJB	561645	female	C103_socket	FJB	562486	female
C74	FJB	561646	male	C105_plug	FJB	562581	male
C80	4th_Lugg_Cmpt	562477	male	C105_socket	FJB	562583	female
C80	4th_Lugg_Cmpt	562479	female	C106_plug	FJB	562581	male
C81	1st_Lugg_Cmpt	562477	male	C106_socket	FJB	562583	female
C81	1st_Lugg_Cmpt	562479	female	C107A	Engine cmpt.	562885	female
C82	1st_Lugg_Cmpt	562477	male	C107A	Engine cmpt.	562884	female
C82	1st_Lugg_Cmpt	562479	female	C107B	Engine cmpt.	562885	female
C83	2nd_Lugg_Cmpt	562477	male	C107B	Engine cmpt.	562884	female
C83	2nd_Lugg_Cmpt	562479	female	C107C	Engine cmpt.	562885	female
C84	2nd_Lugg_Cmpt	562477	male	C107C	Engine cmpt.	562884	female
C84	2nd_Lugg_Cmpt	562479	female	C110	Dash	568110	male
C85	2nd_Lugg_Cmpt	562477	male	C110	Dash	568109	female
C85	2nd_Lugg_Cmpt	562479	female	C111	FJB	562581	male
C86	4th lugg. cmpt.	562477	male	C111	FJB	562583	female
C86	4th lugg. cmpt.	562479	female	C112	RJB	562284	male
C87	Engine_Cmpt	562485	male	C112	RJB	562281	female
C87	Engine_Cmpt	562486	female	C119A	Rear engine door	568110	male
C88	FJB	563618	male	C119A	Rear engine door	568109	female
C88	FJB	563616	female	C120Y	Parcel rack	562783	male
C89	4th lugg. cmpt.	562477	male	C120Y	Parcel rack	563206	female
C89	4th lugg. cmpt.	562479	female	C121	Rear engine door	562566	male
C91	RJB	562285	male	C121	Rear engine door	562565	female
C91	RJB	562282	female	C122	Rear engine door	562566	male
C92A	Engine cmpt.	563226	male	C122	Rear engine door	562565	female
C92A	Engine cmpt.	563613	female	C144	RJB	560851	female
C92C	Engine cmpt.	562581	male	C152	Cond_Cmpt	561611	male
C92C	Engine cmpt.	562583	female	C152	Cond_Cmpt	561610	female
C94_plug	FJB	563589	male	C158	Condensor cmpt.	562477	male
C94_socket	FJB	563590	female	C158	Condensor cmpt.	562479	female
C96	FJB	561643	male	C170	LH_Console	561637	male
C96	FJB	561642	female	C170	LH_Console	561636	female
C97	FJB	561643	male	C171	LH_Console	561646	male
C97	FJB	561642	female	C171	LH_Console	561645	female
C100	Evaporator cmpt.	562477	male	C172	Dash	561637	male
C100	Evaporator cmpt.	562479	female	C172	Dash	561635	female
C100S	Evaporator cmpt.	562477	male	C193_plug	RJB	563589	male
C100S	Evaporator cmpt.	562479	female	C193_socket	RJB	563590	female
C101	Service_Cmpt	561690	male	C194	FJB	563589	male
C101	Service_Cmpt	561566	female	C194	FJB	563590	female
C102A	Evaporator cmpt.	563226	male	C194spA	FJB	563589	male

Connectors list

No	Location	Part no	Gender	No	Location	Part no	Gender
C194spA	FJB	563590	female	C284-3	Parcel rack	561782	male
C194spB	FJB	563589	male	C284-3	Parcel rack	561781	female
C194spB	FJB	563590	female	C284-4	Parcel rack	561782	male
C206	Parcel_Rack_RH	562503	male	C284-4	Parcel rack	561781	female
C206	Parcel_Rack_RH	562507	female	C284-5	Parcel rack	561782	male
C207	Parcel_Rack_LH	562503	male	C284-5	Parcel rack	561781	female
C207	Parcel_Rack_LH	562507	female	C290	Rear_Vehicle	562477	male
C213	Parcel_Rack_LH	561515	male	C290	Rear_Vehicle	562479	female
C213	Parcel_Rack_LH	561552	female	C298	Parcel rack	561782	male
C222	FJB	562477	male	C298	Parcel rack	561781	female
C222	FJB	562479	female	C304	3rd lugg. cmpt.	560852	male
C223	FJB	563227	male	C304	3rd lugg. cmpt.	560851	female
C223	FJB	563614	female	C305	3rd lugg. cmpt.	560852	male
C224	FJB	561637	male	C305	3rd lugg. cmpt.	560851	female
C224	FJB	561636	female	C356	Parcel rack	561710	male
C225	FJB	562650	male	C356	Parcel rack	561709	female
C225	FJB	562649	female	C357	Parcel rack	561847	male
C226	FJB	562650	male	C357	Parcel rack	561862	female
C226	FJB	562649	female	C380A	Dash	564222	male
C228	Engine cmpt.	562477	male	C380A	Dash	564224	female
C228	Engine cmpt.	562479	female	C381	Parcel_Rack	561847	male
C242	Service_Cmpt	562789	male	C381	Parcel_Rack	561862	female
C242	Service_Cmpt	565131	female	C382	Under_Seat	561582	female
C243	Service_Cmpt	563347	male	C397	RJB	562285	male
C243	Service_Cmpt	563180	female	C397	RJB	562282	female
C250	Parcel_Rack	564208	male	C430_plug	LH_Console	562363	male
C250	Parcel_Rack	mating_564208	female	C430_socket	LH_Console	561188	female
C251	Driver_Area	562549	male	C463	Rear axle cmpt.	568111	male
C251	Driver_Area	562550	female	C463	Rear axle cmpt.	568112	female
C266	Parcel rack	561640	male	C464A	FJB	564222	male
C266	Parcel rack	561639	female	C464A	FJB	564224	female
C267	Parcel rack	561782	male	C465	Dash	562581	male
C267	Parcel rack	561781	female	C465	Dash	562583	female
C279	Service_Cmpt	562477	male	C506_plug	FJB	561687	male
C279	Service_Cmpt	562479	female	C506_socket	FJB	561685	female
C280	Parcel_Rack	562549	male	C506spA	FJB	561687	male
C280	Parcel_Rack	562550	female	C506spA	FJB	561685	female
C284	Parcel rack	561782	male	C506spB	FJB	561687	male
C284	Parcel rack	561781	female	C506spB	FJB	561685	female
C284-1	Parcel rack	561782	male	C542	Parcel rack	561550	male
C284-1	Parcel rack	561781	female	C542	Parcel rack	561667	female
C284-2	Parcel rack	561782	male	C551	3rd lugg. cmpt.	561476	male
C284-2	Parcel rack	561781	female	C551	3rd lugg. cmpt.	561477	female

Connectors list

No	Location	Part no	Gender	No	Location	Part no	Gender
C553	2nd_Lugg_Cmpt	561476	male	C603	RH Roof Win Ajar	561477	female
C553	2nd_Lugg_Cmpt	561477	female	C614	Passenger_Area	563040	female
C554	1st_Lugg_Cmpt	561476	male	C615	Passenger_Area	563040	female
C554	1st_Lugg_Cmpt	561477	female	C617	Mirror_LH	563801	male
C555	1st_Lugg_Cmpt	561476	male	C617	Mirror_LH	563800	female
C555	1st_Lugg_Cmpt	561477	female	C618	Mirror_RH	563801	male
C556	3rd lugg. cmpt.	561476	male	C618	Mirror_RH	563800	female
C556	3rd lugg. cmpt.	561477	female	C752	Parcel rack	mating_901283	male
C557	2nd_Lugg_Cmpt	561476	male	C752	Parcel rack	901283	female
C557	2nd_Lugg_Cmpt	561477	female	C753	Parcel rack	mating_901283	male
C558	3rd lugg. cmpt.	562503	male	C753	Parcel rack	901283	female
C558	3rd lugg. cmpt.	562507	female	C766	Parcel rack	561662	male
C559	3rd lugg. cmpt.	561476	male	C766	Parcel rack	561661	female
C559	3rd lugg. cmpt.	561477	female	C768	Parcel rack	mating_901283	male
C560	3rd lugg. cmpt.	561476	male	C768	Parcel rack	901283	female
C560	3rd lugg. cmpt.	561477	female	C769	Parcel rack	mating_901283	male
C561	3rd lugg. cmpt.	561476	male	C769	Parcel rack	901283	female
C561	3rd lugg. cmpt.	561477	female	C_A131_A	Engine_Cmpt	561782	male
C562	3rd lugg. cmpt.	561476	male	C_A131_A	Engine_Cmpt	561781	female
C562	3rd lugg. cmpt.	561477	female	C_A131_B	Engine_Cmpt	561782	male
C564	Parcel rack	562503	male	C_A131_B	Engine_Cmpt	561781	female
C564	Parcel rack	562507	female	C_ALT	Engine_Cmpt	562581	male
C564-Sp	Parcel rack	562503	male	C_ALT	Engine_Cmpt	562583	female
C564-Sp	Parcel rack	562507	female	C_ALT3	Engine_Cmpt	562477	male
C566	Parcel rack	562503	male	C_ALT3	Engine_Cmpt	562479	female
C566	Parcel rack	562507	female	C_AUX	Parcel rack	563071	male
C567	Parcel rack	562503	male	C_AUX	Parcel rack	563040	female
C567	Parcel rack	562507	female	C_INV1	Parcel rack	562337	male
C575	Parcel_Rack_RH	562503	male	C_INV1	Parcel rack	562338	male
C575	Parcel_Rack_RH	562507	female	C_INV2	Parcel rack	562337	male
C576B	Parcel_Rack_RH	562006	male	C_INV2	Parcel rack	562338	male
C576B	Parcel_Rack_RH	560908	female	C_LineOut	Parcel rack	563962	male
C576BB	Parcel_Rack_RH	562006	male	C_LineOut	Parcel rack	564489	female
C576BB	Parcel_Rack_RH	560908	female	C_Mo9	Evap_Cmpt	561577	male
C577A	Parcel_Rack	562006	male	C_Mo9	Evap_Cmpt	561605	female
C577A	Parcel_Rack	560908	female	C_VIDEO_AU	Parcel rack	562557	male
C577AA	Parcel_Rack	562006	male	C_VIDEO_AU	Parcel rack	562558	female
C577AA	Parcel_Rack	560908	female	CCust	Parcel_Rack_Fr_WCL	562477	male
C578	Parcel_Rack_LH	562503	male	CCust	RJB	562479	female
C578	Parcel_Rack_LH	562507	female	CFHPR1	Parcel rack	564560	male
C601	LH Roof Win Ajar	561476	male	CFHPR1	Parcel rack	mating_564560	female
C601	LH Roof Win Ajar	561477	female	CHORN	Dash	563767	male
C603	RH Roof Win Ajar	561476	male	CHORN	Dash	563768	female

Connectors list

No	Location	Part no	Gender	No	Location	Part no	Gender
CInt1	FJB	563227	male	L22.A	Front_Roof	561608	female
CInt1	FJB	563614	female	L22.B	Front_Roof	562286	male
CInt2	FJB	563226	male	L23.A	Front_Roof	561608	female
CInt2	FJB	563613	female	L23.B	Front_Roof	562286	male
CP1	Passenger_Area	561782	male	L24.A	Front_Roof	561608	female
CP1	Passenger_Area	561781	female	L24.B	Front_Roof	562286	male
CP2	Passenger_Area	561782	male	L25.A	Front_Roof	561608	female
CP2	Passenger_Area	561781	female	L25.B	Front_Roof	562286	male
CP3	Passenger_Area	561782	male	L26.A	Front_Roof	561608	female
CP3	Passenger_Area	561781	female	L26.B	Front_Roof	562286	male
CP4	Passenger_Area	561782	male	L27.A	Front_Roof	561608	female
CP4	Passenger_Area	561781	female	L27.B	Front_Roof	562286	male
CP5	Passenger_Area	561782	male	L52	Parcel rack	560900	female
CP5	Passenger_Area	561781	female	L53	Parcel rack	560900	female
CP6	Passenger_Area	562337	male	L54	Parcel rack	560900	female
CP6	Passenger_Area	562338	male	L55	Parcel rack	560900	female
CSo1	WCL cmpt.	562581	male	L56	Parcel rack	560900	female
CSo1	WCL cmpt.	562583	female	L57	Parcel rack	560900	female
CSo2	WCL cmpt.	561643	male	L58	Parcel rack	560900	female
CSo2	WCL cmpt.	561641	female	L59A	Out_Side_Front_RH	562623	male
CSo5	WCL cmpt.	561847	male	L59B	Out_Side_Front_RH	562623	male
CSo5	WCL cmpt.	561862	female	L60A	Out_Side_Front_LH	563366	male
CSo7	WCL cmpt.	562581	male	L60B	Out_Side_Front_LH	562623	male
CSo7	WCL cmpt.	562583	female	L61	Out_Side_Front_RH	562601	male
CT2_plug	Engine_Cmpt	563226	male	L62	Out_Side_Front_LH	562601	male
CT2_socket	Engine_Cmpt	563613	female	L63	Front_Side_LH	562155	male
CT3	Rear_Vehicle	563224	male	L64	Outside_Front_RH	562155	male
CT3	Rear_Vehicle	mating_563224	female	L65	Outside_Front_LH	562155	male
CT_In	Rear_Vehicle	560167	male	L66	Out_Side_Front_LH	562155	male
CT_In	Rear_Vehicle	560159	female	L67	4rd_Lugg_Cmpt	562155	male
CT_Out	Rear_Vehicle	mating_560233	male	L68	4rd_Lugg_Cmpt	562155	male
CT_Out	Rear_Vehicle	560233	female	L69	4rd_Lugg_Cmpt	562155	male
EI	Engine cmpt.	563739	male	L70	4rd_Lugg_Cmpt	562155	male
L1A	Engine cmpt.	564045	female	L71A	Rear engine door	562601	male
L10	Front roof	561247	male	L72	Rear_Vehicle	562155	male
L16.A	Front roof	562615	female	L73A	Rear engine door	562601	male
L16.B	Front roof	562615	female	L74	Rear_Vehicle	562155	male
L17.A	Entrance_Door	562615	female	L75	Rear engine door	562155	male
L17.B	Entrance_Door	562615	female	L76	Rear engine door	562155	male
L18.A	Entrance_Door	561626	female	L77A	Rear vehicule	562601	male
L18.B	Entrance_Door	561626	female	L78A	Rear vehicule	562601	male
L21.A	Front_Roof	561608	female	L79A	Rear vehicule	562601	male
L21.B	Front_Roof	562286	male	L80A	Rear vehicule	562601	male

Connectors list

No	Location	Part no	Gender	No	Location	Part no	Gender
L81.A	Rear_Vehicle	562835	female	L185.B	Service cmpt.	561539	male
L81.B	Rear_Vehicle	562834	male	L186.A	Dash	561539	male
L82A	Rear vehicule	562348	female	L186.B	Dash	561539	male
L83A	Rear vehicule	562348	female	L187	Engine_Cmpt	561690	male
L84.A	Rear_Roof	561608	female	L193.A	Dash	560488	female
L84.B	Rear_Roof	562286	male	L193.B	Dash	560488	female
L85.A	Rear_Roof	561608	female	L194.A	Dash	562019	female
L85.B	Rear_Roof	562286	male	L194.B	Dash	560488	female
L86.A	Rear_Roof	561608	female	L195.A	Dash	560488	female
L86.B	Rear_Roof	562286	male	L195.B	Dash	560488	female
L87.A	Rear_Roof	561608	female	L199	Engine cmpt.	562848	male
L87.B	Rear_Roof	562286	male	L203	RH_Console	561690	male
L88.A	Rear_Roof	561608	female	L205	Engine cmpt.	562485	male
L88.B	Rear_Roof	562286	male	L282	Engine_Cmpt	561690	male
L89.A	Rear_Roof	561608	female	L285.A	Rear_Vehicle	562835	female
L89.B	Rear_Roof	562286	male	L285.B	Rear_Vehicle	562834	male
L90.A	Rear_Roof	561608	female	L286.A	Rear_Vehicle	562835	female
L90.B	Rear_Roof	562286	male	L286.B	Rear_Vehicle	562834	male
L91A	Rear vehicule	562601	male	L298A	Engine cmpt.	563590	female
L92A	Rear vehicule	562601	male	L304	Luggages	562155	male
L93.A	Rear vehicule	563069	female	L305	Luggages	562155	male
L93.B	Rear vehicule	563069	female	L306	Luggages	562155	male
L94.A	Rear vehicule	563069	female	L307	Luggages	562155	male
L94.B	Rear vehicule	563069	female	L309	Luggages	561247	male
L95	Outside_Front_LH	562902	female	L350A.A	Rear axle cmpt.	564552	male
L96	Outside_Front_RH	562902	female	L350A.B	Rear axle cmpt.	563340	male
L97.A	Outside_Front_LH	563069	female	L350A.C	Rear axle cmpt.	562251	male
L97.B	Outside_Front_LH	563069	female	Mo3	Dash	561667	female
L98.A	Entrance_Door	563069	female	Mo4	Dash	562076	male
L98.B	Outside_Front_RH	563069	female	Mo7	Cond_Cmpt	563691	male
L120	Dash	562237	female	Mo8	Cond_Cmpt	563691	male
L173	Parcel rack	563590	female	Mo11	Parcel rack	563691	male
L174A	Parcel rack	563590	female	Mo12	Engine_Cmpt	561690	male
L176	3rd_Lugg_Cmpt	561247	male	Mo15	Front_Ceiling	560900	female
L177	3rd_Lugg_Cmpt	561247	male	Mo16	Front_Ceiling	560900	female
L178	3rd_Lugg_Cmpt	561247	male	Mo17	RH_Console	563626	male
L179	3rd_Lugg_Cmpt	561247	male	Mo19	Fr_Service_Door	562474	male
L180	2nd_Lugg_Cmpt	561247	male	Mo20	Fr_Service_Door	562474	male
L181	2nd_Lugg_Cmpt	561247	male	Mo22	RH_Console	561186	male
L182	1st_Lugg_Cmpt	561247	male	Mo24	RH_Console	562348	female
L183	1st_Lugg_Cmpt	561247	male	Mo25	RH_Console	562348	female
L184	Service cmpt.	561247	male	Mo26	Dash	564161	male
L185.A	Service cmpt.	561539	male	Mo27	Cond_Cmpt	563691	male

Connectors list

No	Location	Part no	Gender	No	Location	Part no	Gender
Mo28	Cond_Cmpt	563691	male	Pot1.B	Dash	560488	female
Mo29	RJB	563590	female	Pot1.C	Dash	560488	female
Mo30	Compr_Door	564161	male	PR	Parcel rack	561782	male
Mo31	Parcel rack	564161	male	PR	Parcel rack	561781	female
Mo32	Parcel rack	564161	male	PR1	Passenger_Area	561782	male
Mo33	Parcel rack	564161	male	PR1	Passenger_Area	561781	female
Mo34	Parcel rack	564161	male	R3	RJB	563409	male
Mo35	3rd_Lugg_Door	564161	male	R6	Dash	564496	male
Mo36	Parcel rack	564161	male	R7	Dash	564496	male
Mo37	3rd_Lugg_Door	564161	male	R12	Evap_Cmpt	563409	male
Mo38	3rd_Lugg_Door	564161	male	R26	Evap_Cmpt	564496	male
Mo40	1st_Lugg_Cmpt	561477	female	R27	Dash	564496	male
Mo41	2nd_Lugg_Cmpt	561477	female	R29	RJB	563409	male
Mo42	3rd_Lugg_Door	561477	female	R30	FJB	564496	male
Mo43	3rd_Lugg_Door	561477	female	R31	FJB	564496	male
Mo50	Dash	561690	male	R36	RJB	564496	male
Mo54	Service_Cmpt	562474	male	R37	Dash	564496	male
Mo55	Dash	563626	male	R38	Dash	564496	male
Mo65	Engine cmpt.	568089	male	Res3	FJB	563590	female
Mo67	Engine cmpt.	568089	male	Res4	FJB	563590	female
Mo68	Engine cmpt.	568089	male	Res6	FJB	563590	female
Mo69	Engine cmpt.	568089	male	Res7	FJB	563590	female
Mo70	Engine cmpt.	568089	male	Res9.A	Dash	butt_splice	female
Mo71	Engine cmpt.	568089	male	Res9.B	Dash	butt_splice	female
Mo72	Engine cmpt.	568089	male	Res11.A	RJB	butt_splice	female
Mo73	Engine cmpt.	568089	male	Res11.B	RJB	butt_splice	female
MoSO1	WCL cmpt.	561967	male	Res15	Engine_Cmpt	561782	male
MoSO2	WCL cmpt.	561967	male	Res19	FJB	563590	female
P_In1	Passenger_Area	561782	male	Res20	FJB	563590	female
P_In1	Passenger_Area	561781	female	Res31	Urea cmpt.	562350	male
P_Out1	Passenger_Area	561782	male	Res32	Urea cmpt.	563764	female
P_Out1	Passenger_Area	561781	female	Res53.A	Condensor cmpt.	563590	female
P_Out2	Passenger_Area	561782	male	RSO1_CL	Slide out cmpt.	564496	male
P_Out2	Passenger_Area	561781	female	RSO1_OP	Slide out cmpt.	564496	male
P_Out3	Passenger_Area	561782	male	RSO2_CL	Slide out cmpt.	564496	male
P_Out3	Passenger_Area	561781	female	RSO2_OP	Slide out cmpt.	564496	male
PC1	FJB	562650	male	Se11.A	Cond_Cmpt	560082	female
PC1	FJB	562649	female	Se11.B	Cond_Cmpt	560082	female
PF	FJB	561782	male	Se11.C	Cond_Cmpt	560082	female
PF	FJB	561781	female	Se13	Engine_Cmpt	562350	male
PF1	Passenger_Area	561782	male	Se14.A	Driver_Area	561782	male
PF1	Passenger_Area	561781	female	Se14.B	Driver_Area	561781	female
Pot1.A	Dash	560488	female	Se15.A	RH_Console	560488	female

Connectors list

No	Location	Part no	Gender	No	Location	Part no	Gender
Se15.B	RH_Console	560488	female	SeSO5	Slide out cmpt.	562479	female
Se15.C	RH_Console	560488	female	SeSO6	Slide out cmpt.	562479	female
Se16.A	Dash	562651	female	So3	RH_Console	641385	male
Se16.B	Dash	562651	female	So7	Service_Cmpt	561566	female
Se17.A	RH_Console	562291	female	So8	Service cmpt.	641385	male
Se17.B	RH_Console	562291	female	So9	Engine cmpt.	560016	female
Se17.C	RH_Console	562291	female	So11	Cond_Cmpt	561566	female
Se18	Service_Cmpt	561566	female	So13	Evap_Cmpt	563204	female
Se19_P	Service_Cmpt	563677	male	So21	Front_Axle_Cmpt	564046	female
Se19_S	Service_Cmpt	563677	male	So22	Front_Axle_Cmpt	564046	female
Se20	Evap_Cmpt	562426	male	So23	Rear_Axle_Cmpt	564046	female
Se21	Dash	561248	female	So24	Rear_Axle_Cmpt	564046	female
Se23	Engine_Cmpt	563159	male	So27	Rear axle cmpt.	564045	female
Se24	Engine_Cmpt	563758	female	So28	Pneumatic plate	641385	male
Se24A	Engine_Cmpt	563758	female	So29	Pneumatic plate	641385	male
Se25	Passenger_Area	561248	female	So30	Pneumatic plate	641385	male
Se29	Engine_Cmpt	561566	female	So31	Pneumatic plate	641385	male
Se30	Engine door	562877	female	So32	Pneumatic plate	641385	male
Se31	Engine door	562877	female	So36	Condensor cmpt.	561690	male
Se32	Rear_Axle_Cmpt	562426	male	So50	Rear axle cmpt.	564046	female
Se33	Rear_Axle_Cmpt	562856	male	So52	Rear axle cmpt.	564045	female
Se34	Rear_Axle_Cmpt	562426	male	spBar4	Engine cmpt.	564135	male
Se35	Rear_Axle_Cmpt	562426	male	spBar5	Engine cmpt.	564135	male
Se36	Rear_Axle_Cmpt	562427	male	spBar6	Engine cmpt.	564135	male
Se37	Front_Axle_LH	641132	female	spBar7	Engine cmpt.	564135	male
Se38	Front_Axle_RH	641132	female	spBar11	Rear vehicule	564135	male
Se39	Rear_Axle_LH	641132	female	spBar12	Rear vehicule	564135	male
Se40	Rear_Axle_LH	641132	female	spBar13	Engine cmpt.	564135	male
Se45	Service cmpt.	563409	male	spBar14	Engine cmpt.	564135	male
Se46	Rear axle cmpt.	562348	female	spBar15	Engine cmpt.	564135	male
Se53	Service_Cmpt	563159	female	spBar16	Engine cmpt.	564135	male
Se54	Service_Cmpt	563159	female	spBar19	Condensor cmpt.	564135	male
Se55	Service_Cmpt	563159	female	spBar20	Condensor cmpt.	564135	male
Se60	Service_Cmpt	563409	male	spBar21	Condensor cmpt.	564135	male
Se63	Rear axle cmpt.	641132	female	spBar22	Engine cmpt.	564135	male
Se64	Rear axle cmpt.	641132	female	spBar23	Engine cmpt.	564135	male
Se65	Dash	564042	female	spBar24	Engine cmpt.	564135	male
Se66	FJB	564039	female	Sw1.C258	Driver_Area	561188	female
Se67	Front axle cmpt.	563159	female	Sw1.C259	Driver_Area	561186	male
Se69	Front axle cmpt.	563159	female	Sw2	Dash	562763	male
SESO1	Slide out cmpt.	563159	female	Sw3	Dash	562763	male
SeSO2	Slide out cmpt.	562479	female	Sw4	Dash	562763	male
SeSO3	Slide out cmpt.	562479	female	Sw6	Dash	562763	male

Connectors list

No	Location	Part no	Gender	No	Location	Part no	Gender
Sw14	Dash	562763	male	Sw107.E	LH_Console	561457	female
Sw16	Dash	562763	male	Sw107.F	LH_Console	561457	female
Sw17	Dash	562763	male	Sw107.G	LH_Console	561457	female
Sw18A	LH_Console	562763	male	Sw107.H	LH_Console	561457	female
Sw24	Dash	562763	male	Sw107.J	LH_Console	561457	female
Sw34	Outside_Front_RH	562763	male	Sw107.K	LH_Console	561457	female
Sw35	Console	562763	male	Sw108	LH_Console	562763	male
Sw38	LH_Console	562763	male	Sw109.A	1st_Lugg_LH	560079	female
Sw40	LH_Console	561690	male	Sw109.B	1st_Lugg_LH	560079	female
Sw41	LH_Console	562749	male	Sw110.A	1st_Lugg_RH	560079	female
Sw44.A	Service cmpt.	562403	female	Sw110.B	1st_Lugg_RH	560079	female
Sw45.A	3rd_Lugg_Cmpt	562403	female	Sw111.A	2nd lugg. cmpt.	560079	female
Sw45.B	3rd_Lugg_Cmpt	562403	female	Sw111.B	2nd lugg. cmpt.	560079	female
Sw46.A	3rd_Lugg_Cmpt	562403	female	Sw112.A	2nd lugg. cmpt.	560079	female
Sw46.B	3rd_Lugg_Cmpt	562403	female	Sw112.B	2nd lugg. cmpt.	560079	female
Sw47.A	3rd_Lugg_Cmpt	562403	female	Sw113.A	2nd lugg. cmpt.	560079	female
Sw47.B	3rd_Lugg_Cmpt	562403	female	Sw113.B	2nd lugg. cmpt.	560079	female
Sw48.A	3rd_Lugg_Cmpt	562403	female	Sw114.A	3rd_Lugg_RH	560079	female
Sw48.B	3rd_Lugg_Cmpt	562403	female	Sw114.B	3rd_Lugg_RH	560079	female
Sw49.A	2nd_Lugg_Cmpt	562403	female	Sw115.A	Compr_Door	560079	female
Sw49.B	2nd_Lugg_Cmpt	562403	female	Sw115.B	Compr_Door	560079	female
Sw50.A	2nd_Lugg_Cmpt	562403	female	Sw122	Dash	562763	male
Sw51.A	1st_Lugg_Cmpt	562403	female	Sw137	Dash	562763	male
Sw52.A	1st_Lugg_Cmpt	562403	female	Sw152	Driver_Area	562471	male
Sw58.A	Engine cmpt.	563135	male	Sw156	LH_Console	562763	male
Sw59	Engine cmpt.	563135	male	Sw157	Dash	562763	male
Sw63A	LH Console	562763	male	Sw158	Dash	562763	male
Sw64.A	Service_Cmpt	560815	female	SwSo1	Slide out cmpt.	561552	female
Sw64.B	Service_Cmpt	560815	female	SwSo2	Slide out cmpt.	561552	female
Sw82	RJB	563135	male	VECF1	FJB	563186	male
Sw83.A	Dash	560082	female	VECF1	FJB	mating_563186	female
Sw83.B	Dash	560815	female	VECF2	FJB	563183	male
Sw83.C	Dash	560082	female	VECF2	FJB	mating_563183	female
Sw83.D	Dash	560815	female	VECF3	FJB	563185	male
Sw85	LH_Console	562749	male	VECF3	FJB	mating_563185	female
Sw99	Dash	562763	male	VECF4	FJB	563182	male
Sw102	RJB	562763	male	VECF4	FJB	mating_563182	female
Sw103A	LH_Console	562763	male	VECF9	FJB	563448	male
Sw104	Dash	562763	male	VECF9	FJB	mating_563448	female
Sw107.A	LH_Console	561457	female	VECF10	FJB	563181	male
Sw107.B	LH_Console	561457	female	VECF10	FJB	mating_563181	female
Sw107.C	LH_Console	561457	female	VECF11	FJB	563184	male
Sw107.D	LH_Console	561457	female	VECF11	FJB	mating_563184	female

Connectors list

No	Location	Part no	Gender	No	Location	Part no	Gender
VECF12	FJB	563187	male				
VECF12	FJB	mating_563187	female				
VECR1	RJB	563186	male				
VECR1	RJB	mating_563186	female				
VECR2	RJB	563183	male				
VECR2	RJB	mating_563183	female				
VECR3	RJB	563185	male				
VECR3	RJB	mating_563185	female				
VECR4	RJB	563182	male				
VECR4	RJB	mating_563182	female				
VECR9	RJB	563448	male				
VECR9	RJB	mating_563448	female				
VECR10	RJB	563181	male				
VECR10	RJB	mating_563181	female				
VECR11	RJB	563184	male				
VECR11	RJB	mating_563184	female				
VECR12	RJB	563187	male				
VECR12	RJB	mating_563187	female				
VECT3	Rear vehicule	563718	male				
VECT3	Rear vehicule	mating_563718	female				
VECT4	Rear vehicule	563714	male				
VECT4	Rear vehicule	mating_563714	female				
Y80	Engine_Cmpt	563789	male				
Y81	Cond_Cmpt	563793	male				

CONNECTORS LIST

No	Location	Part #	Gender	No	Location	Part #	Gender
A1	RJB	563975	male	A83	Parcelrack	565970	female
A2	FJB	563984	male	A96	FJB	564073	female
A3	Dash	562363	male	A97	Dash	563226	male
A4.A	Service_Cmpt	562428	female	A97A	Dash	563226	male
A4.B	Service_Cmpt	561188	female	A97A	Dash	563613	female
A5	Service_Cmpt	562428	female	A97B	Dash	563226	male
A6	Engine_Cmpt	562427	male	A97B	Dash	563613	female
A7	Rear_Axle_Cmpt	563979	male	A100	Front_Axle_Cmpt	563758	female
A9.Cx1	FJB	564041	female	A101	Rear_RH_Axle_Cmpt	563758	female
A9.Cx2	FJB	563678	male	A102	Rear_RH_Axle_Cmpt	563758	female
A9.Cx3	FJB	564037	female	A103	Dash	562070	female
A9.Cx4	FJB	564038	female	A106	FrontVehicle	565974	male
A14.A	Dash	562766	male	A114A	Dash	564252	male
A14.B	Dash	562767	male	A130	Driver_Area	563226	male
A14.C	Dash	562765	male	A131.A	Engine_Cmpt	561782	male
A15	Dash	562464	male	A131.B	Engine_Cmpt	561781	female
A18.J1	FJB	562794	male	A137A	CondensorCmpt.	20429843	male
A18.J2	FJB	562650	male	A138	Cond_Cmpt	563787	male
A24.A	RH_Console	561890	male	A139	Dash	564501	male
A24.B	RH_Console	561566	female	AE41.J1	FJB	563679	male
A24.C	RH_Console	561889	female	AE41.J2	FJB	564037	female
A27	Service_Cmpt	562929	male	AE41.J3	FJB	564004	male
A28	Service_Cmpt	562928	male	AE42.J1	FJB	563679	male
A30.A	Dash	561611	male	AE42.J2	FJB	564037	female
A30.C	Dash	561889	female	AE42.J3	FJB	564004	male
A31.J1	Dash	562780	male	AE43.J1	FJB	563679	male
A31.J2	Dash	562842	male	AE43.J2	FJB	564037	male
A31.J3	Dash	562464	male	AE43.J3	FJB	565957	male
A31.J4	Dash	562465	male	AE44.J1	FJB	563679	male
A31.J5	Dash	563071	male	AE44.J2	FJB	564037	female
A34.J	EngineCmpt.	568118	male	AE44.J3	FJB	565957	male
A34.K	EngineCmpt.	564270	male	AE45.J1	FJB	563679	male
A34.L	EngineCmpt.	564269	male	AE45.J2	FJB	564037	female
A36.JA	FJB	562767	male	AE45.J3	FJB	565957	male
A36.JB	FJB	562765	male	AE46.J1	FJB	563679	male
A36.JC	FJB	562957	male	AE46.J2	FJB	564037	female
A77	Parcelrack	564547	male	AE46.J3	FJB	565957	male
A78	Parcelrack	562583	female	AE47.J1	RHConsole	563679	male
A79	Parcelrack	562583	female	AE47.J2	RHConsole	564037	female
A80	Parcelrack	562479	female	AE47.J3	RHConsole	565957	male
A81.JA	FJB	562767	male	AE48.J1	RHConsole	563679	male
A81.JB	FJB	562765	male	AE48.J2	RHConsole	564037	female
A81.JC	FJB	562957	male	AE48.J3	RHConsole	565957	male

CONNECTORS LIST

No	Location	Part #	Gender	No	Location	Part #	Gender
AE49.J1	RJB	563679	male	B98	Engine_Cmpt	563817	male
AE49.J2	RJB	564037	male	B115A	EngineCmpt.	564226	male
AE49.J3	RJB	565957	male	B142C	CondensorCmpt.	563793	male
AE50.J1	RJB	563679	male	B310	EngineCmpt.	565967	male
AE50.J2	RJB	564037	male	C1	FJB	563589	male
AE50.J3	RJB	565957	male	C1	FJB	563590	female
AE51.J1	RJB	563679	male	C1S	FJB	563589	male
AE51.J2	RJB	564037	female	C1S	FJB	563590	female
AE51.J3	RJB	565957	male	C2	Service_Cmpt	563580	male
AE52.J1	RJB	563679	male	C2	Service_Cmpt	563581	female
AE52.J2	RJB	564037	female	C2A	FJB	563580	male
AE52.J3	RJB	565957	male	C2A	FJB	563581	female
AE54.J1	EvaporatorCmpt.	563679	male	C2B	FJB	564034	male
AE54.J2	EvaporatorCmpt.	564037	female	C2B	FJB	564035	female
AE54.J3	EvaporatorCmpt.	565957	male	C3_plug	RJB	563589	male
AE55.J1	Dash	563679	male	C3_socket	RJB	563590	female
AE55.J2	Dash	564037	female	C3S	RJB	563593	male
AE55.J3	Dash	564004	male	C3S	RJB	563590	female
AE56.J1	Dash	563679	male	C4	FJB	563580	male
AE56.J2	Dash	564037	male	C4	FJB	563581	female
AE56.J3	Dash	564004	male	C5	FJB	563589	male
AE57.J1	3rd_RH_Lugg_Cmpt	563679	male	C5	FJB	563590	female
AE57.J2	3rd_RH_Lugg_Cmpt	564037	male	C5S	FJB	563589	male
AE57.J3	3rd_RH_Lugg_Cmpt	564004	male	C5S	FJB	563590	female
AE58.J1	SlideoutPanel	563679	male	C6	FJB	563582	male
AE58.J2	SlideoutPanel	564037	male	C6	FJB	563583	female
AE58.J3	SlideoutPanel	565957	male	C7	Service_Cmpt	562566	male
AE59.J1	SlideoutPanel	563679	male	C7	Service_Cmpt	562565	female
AE59.J2	SlideoutPanel	564037	male	C8	FJB	563227	male
AE59.J3	SlideoutPanel	565957	male	C8	FJB	563614	female
AltLL.A	EngineCmpt.	563746	female	C9	RJB	561986	male
AltLL.B	EngineCmpt.	560815	female	C9	RJB	561987	female
AltLL.C	EngineCmpt.	564469	female	C10	Engine_Cmpt	562477	male
AltUL.A	EngineCmpt.	563746	female	C10	Engine_Cmpt	562479	female
AltUL.B	EngineCmpt.	560815	female	C11	Service_Cmpt	563580	male
AltUL.C	EngineCmpt.	564469	female	C11	Service_Cmpt	563581	female
AltUR.A	EngineCmpt.	563746	female	C12	Engine_Cmpt	562581	male
AltUR.B	EngineCmpt.	560815	female	C12	Engine_Cmpt	562583	female
AltUR.C	EngineCmpt.	564469	female	C13_plug	RH_Console	563589	male
B85	Engine_Cmpt	563815	male	C13_socket	RH_Console	563590	female
B96	Engine_Cmpt	563821	male	C13S	RH_Console	563589	male
B96B	Engine_Cmpt	563823	male	C13S	RH_Console	563590	female
B97	Engine_Cmpt	563816	male	C14	FrontVehicle	562581	male

CONNECTORS LIST

No	Location	Part #	Gender	No	Location	Part #	Gender
C14	FrontVehicle	562583	female	C52	EvaporatorCmpt.	563618	male
C15A	Evap_Cmpt	568110	male	C52	EvaporatorCmpt.	563616	female
C15A	Evap_Cmpt	568109	female	C54	EngineCmpt.	563226	male
C17	RJB	560195	male	C54	EngineCmpt.	563613	female
C17	RJB	560169	female	C54A	EngineCmpt.	568110	male
C18	FJB	561986	male	C54A	EngineCmpt.	568109	female
C18	FJB	561987	female	C54B	EngineCmpt.	563589	male
C19	RJB	561986	male	C54B	EngineCmpt.	563590	female
C19	RJB	561987	female	C58	CondensorCmpt.	564567	male
C23	Evap_Cmpt	564034	male	C58	CondensorCmpt.	564568	female
C23	Evap_Cmpt	564035	female	C58A	CondensorCmpt.	564258	male
C24_plug	Evap_Cmpt	561690	male	C58A	CondensorCmpt.	566037	female
C24_socket	Evap_Cmpt	561566	female	C59	3rdLuggCmpt.	561643	male
C26	UreaCmpt.	563226	male	C59	3rdLuggCmpt.	561642	female
C26	UreaCmpt.	563613	female	C61	Fr_Service_Door	561669	male
C26A	UreaCmpt.	568110	male	C61	Fr_Service_Door	561670	female
C26A	UreaCmpt.	568109	female	C62	Fr_Service_Door	562566	male
C26B	UreaCmpt.	563227	male	C62	Fr_Service_Door	562565	female
C26B	UreaCmpt.	563614	female	C64	EngineCmpt.	568110	male
C29	WCL_System	563651	male	C64	EngineCmpt.	568109	female
C29	WCL_System	563652	female	C71	FJB	561646	male
C30	WCL_System	561710	male	C71	FJB	561645	female
C30	WCL_System	561709	female	C72	FJB	561646	male
C32W	3rd_RH_Lugg_Cmpt	561640	male	C72	FJB	561645	female
C32W	3rd_RH_Lugg_Cmpt	561639	female	C74	FJB	561645	female
C33	3rd_RH_Lugg_Cmpt	564034	male	C74	FJB	561646	male
C33	3rd_RH_Lugg_Cmpt	564035	female	C80	EvaporatorCmpt.	562477	male
C34	RH_Console	561986	male	C80	EvaporatorCmpt.	562479	female
C34	RH_Console	561987	female	C81	1st_Lugg_Cmpt	562477	male
C39A	EngineCmpt.	561782	male	C81	1st_Lugg_Cmpt	562479	female
C39A	EngineCmpt.	561781	female	C82	1st_Lugg_Cmpt	562477	male
C40	Dash	562485	male	C82	1st_Lugg_Cmpt	562479	female
C40	Dash	562486	female	C83	2nd_Lugg_Cmpt	562477	male
C44_plug	FJB	561577	male	C83	2nd_Lugg_Cmpt	562479	female
C44_socket	FJB	561605	female	C84	2nd_Lugg_Cmpt	562477	male
C45	FJB	561643	male	C84	2nd_Lugg_Cmpt	562479	female
C45	FJB	561642	female	C85	4rd_Lugg_Cmpt	562477	male
C46	WCL_System	562549	male	C85	2nd_Lugg_Cmpt	562479	female
C46	WCL_System	562550	female	C86	3rdLuggCmpt.	562477	male
C49	FJB	562005	male	C86	3rdLuggCmpt.	562479	female
C49	FJB	561714	female	C87	EngineCmpt.	562485	male
C50	RJB	563226	male	C87	EngineCmpt.	562486	female
C50	RJB	563613	female	C88	3rd_RH_Lugg_Cmpt	563618	male

CONNECTORS LIST

No	Location	Part #	Gender	No	Location	Part #	Gender
C88	3rd_RH_Lugg_Cmpt	563616	female	C152	Cond_Cmpt	561611	male
C89	CondensorCmpt.	562477	male	C152	Cond_Cmpt	561610	female
C89	CondensorCmpt.	562479	female	C158	CondensorCmpt.	562477	male
C91	RJB	562285	male	C158	CondensorCmpt.	562479	female
C91	RJB	562282	female	C159	CondensorCmpt.	566033	male
C92A	EngineCmpt.	563226	male	C159	CondensorCmpt.	566034	female
C92A	EngineCmpt.	563613	female	C170	LH_Console	561637	male
C92C	EngineCmpt.	562581	male	C170	LH_Console	561636	female
C92C	EngineCmpt.	562583	female	C171	LH_Console	561646	male
C94_plug	FJB	563589	male	C171	LH_Console	561645	female
C94_socket	FJB	563590	female	C172	LHConsole	561637	male
C96	FJB	561643	male	C172	LHConsole	561635	female
C96	FJB	561642	female	C193_plug	RJB	563589	male
C97	FJB	561643	male	C193_socket	RJB	563590	female
C97	FJB	561642	female	C194	FJB	563589	male
C100	EvaporatorCmpt.	562477	male	C194	FJB	563590	female
C100	EvaporatorCmpt.	562479	female	C222	FJB	562477	male
C100S	EvaporatorCmpt.	562477	male	C222	FJB	562479	female
C100S	EvaporatorCmpt.	562479	female	C223	FJB	563227	male
C101	Service_Cmpt	561690	male	C223	FJB	563614	female
C101	Service_Cmpt	561566	female	C224	FJB	561637	male
C102A	ServiceCmpt.	563226	male	C224	FJB	561636	female
C102A	ServiceCmpt.	563613	female	C225	FJB	562650	male
C105_plug	FJB	562581	male	C225	FJB	562649	female
C105_socket	FJB	562583	female	C226	FJB	562650	male
C106_plug	FJB	562581	male	C226	FJB	562649	female
C106_socket	FJB	562583	female	C228	EngineCmpt.	562477	male
C110	Dash	568110	male	C228	EngineCmpt.	562479	female
C110	Dash	568109	female	C242	ServiceCmpt.	562789	male
C114	3rd_RH_Lugg_Cmpt	561550	male	C242	ServiceCmpt.	565131	female
C114	3rd_RH_Lugg_Cmpt	561667	female	C243	ServiceCmpt.	563347	male
C119A	EngineDoor	568110	male	C243	ServiceCmpt.	563180	female
C119A	EngineDoor	568109	female	C266	EntraceDoor	561640	male
C121	EngineDoor	562566	male	C266	EntraceDoor	561639	female
C121	EngineDoor	562565	female	C279	Service_Cmpt	562477	male
C122	EngineDoor	562566	male	C279	Service_Cmpt	562479	female
C122	EngineDoor	562565	female	C290	Rear_Vehicle	562477	male
C131A	EngineCmpt.	561782	male	C290	Rear_Vehicle	562479	female
C131A	EngineCmpt.	561781	female	C304	2ndLuggCmpt.	560852	male
C131B	EngineCmpt.	561782	male	C304	2ndLuggCmpt.	560851	female
C131B	EngineCmpt.	561781	female	C305	2ndLuggCmpt.	560852	male
C133	Dash	561734	male	C305	2ndLuggCmpt.	560851	female
C133	Dash	561735	female	C380A	Dash	564222	male

CONNECTORS LIST

No	Location	Part #	Gender	No	Location	Part #	Gender
C380A	Dash	564224	female	CInt1	FJB	563227	male
C397	RJB	562285	male	CInt1	FJB	563614	female
C397	RJB	562282	female	CInt2	FJB	563226	male
C463	EngineCmpt.	568111	male	CInt2	FJB	563613	female
C463	EngineCmpt.	568112	female	CSo1	SlideOutPanel	562581	male
C464A	RJB	564222	male	CSo1	SlideOutPanel	562583	female
C464A	RJB	564224	female	CSo2	SlideOutPanel	561643	male
C551	3rdLuggCmpt.	561476	male	CSo2	SlideOutPanel	561641	female
C551	3rdLuggCmpt.	561477	female	CSo5	SlideOutPanel	561847	male
C553	2ndLuggCmpt.	561476	male	CSo5	SlideOutPanel	561862	female
C553	2ndLuggCmpt.	561477	female	CSo7	SlideOutPanel	562581	male
C554	1stLuggCmpt.	561476	male	CSo7	SlideOutPanel	562583	female
C554	1stLuggCmpt.	561477	female	CT_In	Rear_Vehicle	563582	male
C555	1stLuggCmpt.	561476	male	CT_In	Rear_Vehicle	563583	female
C555	1stLuggCmpt.	561477	female	CT_Out	RearVehicle	560233	female
C556	3rdLuggCmpt.	561476	male	EI	EngineCmpt.	563739	male
C556	3rdLuggCmpt.	561477	female	L1A	EngineCmpt.	562848	male
C557	2ndLugg.Cmpt.	561476	male	L10	Dash	561247	male
C557	2ndLuggCmpt.	561477	female	L16.A	FrontRoof	562615	female
C559	3rdLuggCmpt.	561476	male	L16.B	FrontRoof	562615	female
C559	3rdLuggCmpt.	561477	female	L17.A	FrontRoof	562615	female
C560	3rdLuggCmpt.	561476	male	L17.B	FrontRoof	562615	female
C560	3rdLuggCmpt.	561477	female	L18.A	EntraceDoor	561626	female
C561	3rdLuggCmpt.	561476	male	L18.B	EntraceDoor	561626	female
C561	3rdLuggCmpt.	561477	female	L21	FrontRoof	562486	female
C562	3rdLuggCmpt.	561476	male	L22	FrontRoof	562486	female
C562	3rdLuggCmpt.	561477	female	L23	FrontRoof	562486	female
C617	Mirror_LH	563801	male	L24	FrontRoof	562486	female
C617	Mirror_LH	563800	female	L25	FrontRoof	562486	female
C618	Mirror_RH	563801	male	L26	FrontRoof	562486	female
C618	Mirror_RH	563800	female	L27	FrontRoof	562486	female
C_ALT	EngineCmpt.	562581	male	L59	OutsidefrontRH	562623	male
C_ALT	EngineCmpt.	562583	female	L59A	OutsideFrontRH	563366	male
C_ALT3	EngineCmpt.	562477	male	L59B	OutsideFrontRH	562623	male
C_ALT3	EngineCmpt.	562479	female	L60	OutsideFrontLH	562623	male
C_BC	FJB	561668	male	L60A	OutsideFrontLH	563366	male
C_BC	FJB	561551	female	L60B	OutsideFrontLH	562623	male
C_Mo9	Evap_Cmpt	561577	male	L61	OutsideFrontRH	562601	male
C_Mo9	Evap_Cmpt	561605	female	L62	OutsideFrontLH	562601	male
CCust	RJB	562477	male	L63	FrontSideRH	562155	male
CCust	RJB	562479	female	L64	OutsideFrontRH	562155	male
CF167	RH_Console	562350	male	L65	FrontSideLH	562155	male
CF167	RH_Console	563764	female	L66	OutsideFrontLH	562155	male

CONNECTORS LIST

No	Location	Part #	Gender	No	Location	Part #	Gender
L67	3rdLuggCmpt.	562155	male	L179	4thLuggCmpt.	561247	male
L68	3rdLuggCmpt.	562155	male	L180	2nd_Lugg_Cmpt	561247	male
L69	EvapCmpt.	562155	male	L181	2nd_Lugg_Cmpt	561247	male
L70	EvapCmpt.	562155	male	L182	1st_Lugg_Cmpt	561247	male
L71A	RearVehicleLH	562601	male	L183	1st_Lugg_Cmpt	561247	male
L72	Rear_VehicleLH	562155	male	L184	ServiceCmpt.	561247	male
L73A	RearVehicleRH	562601	male	L185.A	Dash	561539	male
L74	RearVehicleRH	562155	male	L185.B	Dash	561539	male
L75	RearVehicleLH	562155	male	L186.A	Dash	561539	male
L76	RearVehicleRH	562155	male	L186.B	Dash	561539	male
L77A	RearVehicleRH	562601	male	L187	Engine_Cmpt	561690	male
L78A	RearVehicleRH	562601	male	L193.A	Dash	560488	female
L79A	RearVehicleLH	562601	male	L193.B	Dash	560488	female
L80A	RearVehicleLH	562601	male	L194.A	Dash	562019	female
L81.A	DPFDoor	562835	female	L194.B	Dash	560488	female
L81.B	DFPDoor	562834	male	L195.A	Dash	560488	female
L82A	EngineDoor	562348	female	L195.B	Dash	560488	female
L83A	EngineDoor	562348	female	L199	EngineCmpt.	562848	male
L84	RearRoof	562486	female	L203	RH_Console	561690	male
L85	RearRoof	562486	female	L204	WCL_Upper_Door	562803	male
L86	RearRoof	562486	female	L205	EvapCmpt.	562485	male
L87	RearRoof	562486	female	L206	WCL_Upper_Door	562803	male
L88	RearRoof	562486	female	L207.A	WCL_System	561699	female
L89	RearRoof	562486	female	L207.B	WCL_System	561701	female
L90	RearRoof	562486	female	L207.C	WCL_System	561701	female
L91A	RearVehiculeLH	562601	male	L207.D	WCL_System	561699	female
L92A	RearVehicleRH	562601	male	L207.E	WCL_System	561701	female
L93.A	RearOutsideLH	563069	female	L207.F	WCL_System	561699	female
L93.B	RearOutsideLH	563069	female	L207.G	WCL_System	561699	female
L94.A	RearOutsideRH	563069	female	L207.H	WCL_System	560926	female
L94.B	RearOutsideRH	563069	female	L207.I	WCL_System	560926	female
L95	Outside_Front_LH	562902	female	L282	Preheater_Cmpt	561690	male
L96	Outside_Front_RH	562902	female	L285.A	Rear_Vehicle	562835	female
L97.A	Outside_Front_LH	563069	female	L285.B	Rear_Vehicle	562834	male
L97.B	Outside_Front_LH	563069	female	L286.A	Rear_Vehicle	562835	female
L98.A	EntranceDoor	563069	female	L286.B	Rear_Vehicle	562834	male
L98.B	EntraceDoor	563069	female	L298A	EngineCmpt.	563590	female
L120	DriverSeat	562237	female	L304	OutsideLuggDoorLH	562155	male
L173	EngineCmpt.	563590	female	L305	OutsideLuggDoorRH	562155	male
L174A	EngineCmpt.	563590	female	L306	Radiator_Door	562155	male
L176	3rd_Lugg_Cmpt	561247	male	L307	Radiator_Door	562155	male
L177	3rd_Lugg_Cmpt	561247	male	L309	RJB	561247	male
L178	4thLuggCmpt.	561247	male	L350A.A	RearAxleCmpt.	564552	male

CONNECTORS LIST

No	Location	Part #	Gender	No	Location	Part #	Gender
L350A.B	RearAxleCmpt.	563340	male	Mo73	EngineCmpt.	568089	male
L350A.C	RearAxleCmpt.	562251	male	MoSO1	FrontSlideOut	561967	male
Mo3	Dash	561667	female	MoSO2	RearSlideOut	561967	male
Mo4	Dash	562076	male	PC1	CantrackCable	562650	male
Mo7	Cond_Cmpt	563691	male	PC1	CantrackCable	562649	female
Mo8	Cond_Cmpt	563691	male	Pot1.A	Dash	560488	female
Mo11	CondensorCmpt.	568089	male	Pot1.B	Dash	560488	female
Mo12	Engine_Cmpt	561690	male	Pot1.C	Dash	560488	female
Mo15	Front_Ceiling	560900	female	R3	RJB	563409	male
Mo16	Front_Ceiling	560900	female	R6	Dash	564496	male
Mo17	RH_Console	563626	male	R7	Dash	564496	male
Mo19	Fr_Service_Door	562474	male	R12	Evap_Cmpt	563409	male
Mo20	Fr_Service_Door	562474	male	R27	Dash	564496	male
Mo22	RH_Console	561186	male	R29	RJB	563409	male
Mo24	RH_Console	562348	female	R30	FJB	564496	male
Mo25	RH_Console	562348	female	R31	FJB	564496	male
Mo26	EntraceDoor	564161	male	R36	Dash	564496	male
Mo27	Cond_Cmpt	563691	male	R37	Dash	564496	male
Mo28	Cond_Cmpt	563691	male	R38	FJB	564496	male
Mo29	RJB	563590	female	R47	WCL_System	564496	male
Mo30	1stLuggCmpt.LH	564161	male	R167	RH_Console	564496	male
Mo31	1stLuggCmpt.RH	564161	male	Res3	RJB	563590	female
Mo32	2ndLuggCmpt.LH	564161	male	Res4	FJB	563590	female
Mo33	2ndLuggCmpt.RH	564161	male	Res6	FJB	563590	female
Mo34	3rdLuggCmpt.LH	564161	male	Res7	Dashboard	563590	female
Mo35	3rdLuggCmpt.RH	564161	male	Res15	Engine_Cmpt	561782	male
Mo36	CompressorDoor	564161	male	Res19	FJB	563590	female
Mo37	4thLuggCmpt.RH	564161	male	Res20	FJB	563590	female
Mo38	4thLuggCmpt.LH	564161	male	Res31	UreaCmpt.	562350	male
Mo40	1stLuggCmpt.LH	561477	female	Res32	UreaCmpt.	563764	female
Mo41	2ndLuggCmpt.LH	561477	female	Res53.A	CondensorCmpt.	563590	female
Mo42	3rdLuggCmpt.LH	561477	female	RSO1_1	SlideOutPanel	564496	male
Mo43	3rdLuggCmpt.LH	561477	female	RSO1_2	SlideOutPanel	564496	male
Mo50	FrontAxleCmpt.	561690	male	RSO2_1	SlideOutPanel	564496	male
Mo54	Service_Cmpt	562474	male	RSO2_2	SlideOutPanel	564496	male
Mo55	EntraceDoor	563626	male	Se11.A	Cond_Cmpt	560082	female
Mo65	EngineCmpt.	568089	male	Se11.B	Cond_Cmpt	560082	female
Mo67	EngineCmpt.	568089	male	Se11.C	Cond_Cmpt	560082	female
Mo68	EngineCmpt.	568089	male	Se13	Engine_Cmpt	562350	male
Mo69	EngineCmpt.	568089	male	Se14.A	Driver_Area	561782	male
Mo70	EngineCmpt.	568089	male	Se14.B	Driver_Area	561781	female
Mo71	EngineCmpt.	568089	male	Se15.A	EntraceDoor	560488	female
Mo72	EngineCmpt.	568089	male	Se15.B	EntraceDoor	560488	female

CONNECTORS LIST

No	Location	Part #	Gender	No	Location	Part #	Gender
Se15.C	EntraceDoor	560488	female	SeSO3	SlideOutFRLH	562479	female
Se16.A	EntraceDoor	562651	female	SeSO5	SlideOutRrLH	562479	female
Se16.B	EntraceDoor	562651	female	SeSO6	SlideOutRrLH	562479	female
Se17.A	EntraceDoor	562291	female	So3	RHConsole	641385	male
Se17.B	EntraceDoor	562291	female	So7	Service_Cmpt	561566	female
Se17.C	EntraceDoor	562291	female	So8	ServiceCmpt.	641385	male
Se18	ServiceCmpt.	561566	female	So9	EngineCmpt.	560016	female
Se19_P	Service_Cmpt	563677	male	So11	Cond_Cmpt	561566	female
Se19_S	Service_Cmpt	563677	male	So13	Evap_Cmpt	563204	female
Se20	Evap_Cmpt	562426	male	So17	Service_Cmpt	562848	male
Se21	Dash	561248	female	So21	Front_Axle_Cmpt	564046	female
Se23	EngineCmpt.	563159	female	So22	Front_Axle_Cmpt	564046	female
Se23A	EngineCmpt.	563159	female	So23	Rear_Axle_Cmpt	564046	female
Se24	EngineCmpt.	563758	female	So24	Rear_Axle_Cmpt	564046	female
Se24A	EngineCmpt.	563758	female	So27	RearAxleCmpt.	564045	female
Se25	EvapCmpt.	561248	female	So28	ServiceCmpt.	641385	male
Se29	Engine_Cmpt	561566	female	So29	ServiceCmpt.	641385	male
Se30	EngineCmpt.	562877	female	So30	ServiceCmpt.	641385	male
Se31	EngineCmpt.	562877	female	So31	ServiceCmpt.	641385	male
Se32	Rear_Axle_Cmpt	562426	male	So32	ServiceCmpt.	641385	male
Se33	Rear_Axle_Cmpt	562856	male	So36	EngineCmpt.	561690	male
Se34	Rear_Axle_Cmpt	562426	male	So50	RearAxleCmpt.	564046	female
Se35	Rear_Axle_Cmpt	562426	male	So52	FrontAxleCmpt.	564045	female
Se36	Rear_Axle_Cmpt	562427	male	spBar4	EngineCmpt.	564135	male
Se37	Front_Axle_LH	641132	female	spBar5	EngineCmpt.	564135	male
Se38	Front_Axle_RH	641132	female	spBar6	EngineCmpt.	564135	male
Se39	Rear_Axle_LH	641132	female	spBar7	CondCmpt.	564135	male
Se40	Rear_Axle_LH	641132	female	spBar11	EngineCmpt.	564135	male
Se45	ServiceCmpt.	563409	male	spBar12	EngineCmpt.	564135	male
Se46	RearAxleCmpt.	562348	female	spBar13	EngineCmpt.	564135	male
Se53	Service_Cmpt	563159	female	spBar14	EngineCmpt.	564135	male
Se54	Service_Cmpt	563159	female	spBar15	EngineCmpt.	564135	male
Se55	Service_Cmpt	563159	female	spBar16	EngineCmpt.	564135	male
Se60	Service_Cmpt	563409	male	spBar19	CondCmpt.	564135	male
Se63	RearAxleCmpt.	641132	female	spBar20	CondCmpt.	564135	male
Se64	RearAxleCmpt.	641132	female	spBar21	CondCmpt.	564135	male
Se65	Dash	564042	female	spBar22	EngineCmpt.	564135	male
Se66	FrontAxleCmpt.	564039	female	spBar23	EngineCmpt.	564135	male
Se67	ServiceCmpt.	563159	female	spBar24	EngineCmpt.	564135	male
Se69	ServiceCmpt.	563159	female	Sw1.C258	Driver_Area	561188	female
Se100	WCL_Upper_Door	562479	female	Sw1.C259	Driver_Area	561186	male
SESO1	SlideOutPanel	563159	female	Sw2	Dash	562763	male
SeSO2	SlideOutFRLH	562479	female	Sw3	Dash	562763	male

CONNECTORS LIST

No	Location	Part #	Gender	No	Location	Part #	Gender
Sw4	Dash	562763	male	Sw94.A	WCL_Upper_Door	562403	female
Sw6	Dash	562763	male	Sw94.B	WCL_Upper_Door	562403	female
Sw14	Dash	562763	male	Sw99	Dash	562763	male
Sw16	Dash	562763	male	Sw102	Dash	562763	male
Sw17	Dash	562763	male	Sw103A	LHConsole	562763	male
Sw18A	LH_Console	562763	male	Sw104	Dash	562763	male
Sw20	Dashboard	562763	male	Sw107.A	LHConsole	561457	female
Sw24	Dash	562763	male	Sw107.B	LHConsole	561457	female
Sw31	WCL_Upper_Door	563543	male	Sw107.C	LHConsole	561457	female
Sw34	Dash	562763	male	Sw107.D	LHConsole	561457	female
Sw35	LHConsole	562763	male	Sw107.E	LHConsole	561457	female
Sw38	LH_Console	562763	male	Sw107.F	LHConsole	561457	female
Sw40	LH_Console	561690	male	Sw107.G	LHConsole	561457	female
Sw41	LH_Console	562749	male	Sw107.H	LHConsole	561457	female
Sw42	WCL_System	561636	female	Sw107.J	LHConsole	561457	female
Sw44.A	ServiceCmpt.	562403	female	Sw107.K	LHConsole	561457	female
Sw45.A	3rd_Lugg_Cmpt	562403	female	Sw108	LHConsole	562763	male
Sw45.B	3rdLuggCmpt.	562403	female	Sw109.A	1st_Lugg_LH	560079	female
Sw46.A	3rd_Lugg_Cmpt	562403	female	Sw109.B	1st_Lugg_LH	560079	female
Sw46.B	3rdLuggCmpt.	562403	female	Sw110.A	1st_Lugg_RH	560079	female
Sw46A.A	3rd_RH_Lugg_Cmpt	562403	female	Sw110.B	1st_Lugg_RH	560079	female
Sw46A.B	3rd_RH_Lugg_Cmpt	562403	female	Sw111.A	2ndLuggCmpt.	560079	female
Sw47.A	4thLuggCmpt.	562403	female	Sw111.B	2ndLuggCmpt.	560079	female
Sw47.B	4thLuggCmpt.	562403	female	Sw112.A	2ndLuggCmpt.	560079	female
Sw48.A	4thLuggCmpt.	562403	female	Sw112.B	2ndLuggCmpt.	560079	female
Sw48.B	4thLuggCmpt.	562403	female	Sw113.A	2ndLuggCmpt.	560079	female
Sw49.A	2nd_Lugg_Cmpt	562403	female	Sw113.B	2ndLuggCmpt.	560079	female
Sw49.B	2ndLuggCmpt.	562403	female	Sw114.A	3rd_Lugg_RH	560079	female
Sw50.A	2nd_Lugg_Cmpt	562403	female	Sw114.B	3rd_Lugg_RH	560079	female
Sw51.A	1st_Lugg_Cmpt	562403	female	Sw115.A	Compr_Door	560079	female
Sw52.A	1st_Lugg_Cmpt	562403	female	Sw115.B	Compr_Door	560079	female
Sw57	WCL_Upper_Door	563543	male	Sw122	ServiceCmpt.	562763	male
Sw58.A	EngineCmpt.	563135	male	Sw137	Dash	562763	male
Sw59	EngineCmpt.	563135	male	Sw152	Driver_Area	562471	male
Sw63A	LHConsole	562763	male	Sw156	LH_Console	562763	male
Sw64.A	ServiceCmpt.	560815	female	Sw157	Dash	562763	male
Sw64.B	Ssp	560815	female	Sw158	Dash	562763	male
Sw82	RJB	563135	male	Sw165	RH_Console	562763	male
Sw83.A	Dash	560082	female	Sw166	RHConsole	562763	male
Sw83.B	Dash	560815	female	Sw167	RHConsole	562763	male
Sw83.C	Dash	560082	female	SwSo1	FrontSlideOut	561552	female
Sw83.D	Dash	560815	female	SwSo2	RearSlideOut	561552	female
Sw85	LH_Console	562749	male	Term17	FJB	563623	N/A

CONNECTORS LIST

No	Location	Part #	Gender				
Term18	FJB	563682	N/A				
Term106	RJB	{part_no564189}	N/A				
Term107	RJB	{part_no564189}	N/A				
VECF1	FJB	563186	male				
VECF2	FJB	563183	male				
VECF3	FJB	563185	male				
VECF4	FJB	563182	male				
VECF9	FJB	563448	male				
VECF10	FJB	563181	male				
VECF11	FJB	563184	male				
VECF12	FJB	563187	male				
VECR1	RJB	563186	male				
VECR2	RJB	563183	male				
VECR3	RJB	563185	male				
VECR4	RJB	563182	male				
VECR9	RJB	563448	male				
VECR10	RJB	563181	male				
VECR11	RJB	563184	male				
VECR12	RJB	563187	male				
VECT2	Rear_Vehicle	563716	male				
VECT3	RearVehicle	563718	male				
VECT4	RearVehicle	563714	male				
Y80	Engine_Cmpt	563789	male				
Y81	Cond_Cmpt	563793	male				

CONNECTORS LIST

No	Location	Part #	Gender	No	Location	Part #	Gender
A1	RJB	563975	male	A81.JC	FJB	562957	male
A2	FJB	563984	male	A83	Parcelrack	565970	female
A3	Dash	562363	male	A96	FJB	564073	female
A4.A	Service_Cmpt	562428	female	A97	Dash	563226	male
A4.B	Service_Cmpt	561188	female	A97A	Dash	563226	male
A5	Service_Cmpt	562428	female	A97A	Dash	563613	female
A6	Engine_Cmpt	562427	male	A97B	Dash	563226	male
A7	Rear_Axle_Cmpt	563979	male	A97B	Dash	563613	female
A9.Cx1	FJB	564041	female	A99	FJB	564205	male
A9.Cx2	FJB	563678	male	A100	Front_Axle_Cmpt	563758	female
A9.Cx3	FJB	564037	female	A101	Rear_RH_Axle_Cmpt	563758	female
A9.Cx4	FJB	564038	female	A102	Rear_RH_Axle_Cmpt	563758	female
A14.A	Dash	562766	male	A103	Dash	562070	female
A14.B	Dash	562767	male	A106	FrontVehicle	565974	male
A14.C	Dash	562765	male	A114A	Dash	564252	male
A15	Dash	562464	male	A130	Driver_Area	563226	male
A18.J1	FJB	562794	male	A131.A	Engine_Cmpt	561782	male
A18.J2	FJB	562650	male	A131.B	Engine_Cmpt	561781	female
A24.A	RH_Console	561890	male	A137A	CondensorCmpt.	20429843	male
A24.B	RH_Console	561566	female	A138	Cond_Cmpt	563787	male
A24.C	RH_Console	561889	female	A139	Dash	564501	male
A27	Service_Cmpt	562929	male	AE41.J1	FJB	563679	male
A28	Service_Cmpt	562928	male	AE41.J2	FJB	564037	female
A30.A	Dash	561611	male	AE41.J3	FJB	564004	male
A30.C	Dash	561889	female	AE42.J1	FJB	563679	male
A31.J1	Dash	562780	male	AE42.J2	FJB	564037	female
A31.J2	Dash	562842	male	AE42.J3	FJB	564004	male
A31.J3	Dash	562464	male	AE43.J1	FJB	563679	male
A31.J4	Dash	562465	male	AE43.J2	FJB	564037	male
A31.J5	Dash	563071	male	AE43.J3	FJB	565957	male
A34.J	EngineCmpt.	568118	male	AE44.J1	FJB	563679	male
A34.K	EngineCmpt.	564270	male	AE44.J2	FJB	564037	female
A34.L	EngineCmpt.	564269	male	AE44.J3	FJB	565957	male
A36.JA	FJB	562767	male	AE45.J1	FJB	563679	male
A36.JB	FJB	562765	male	AE45.J2	FJB	564037	female
A36.JC	FJB	562957	male	AE45.J3	FJB	565957	male
A40.A	EngineCmpt.	561668	male	AE46.J1	FJB	563679	male
A77	Parcelrack	564547	male	AE46.J2	FJB	564037	female
A78	Parcelrack	562583	female	AE46.J3	FJB	565957	male
A79	Parcelrack	562583	female	AE47.J1	RHConsole	563679	male
A80	Parcelrack	562479	female	AE47.J2	RHConsole	564037	female
A81.JA	FJB	562767	male	AE47.J3	RHConsole	565957	male
A81.JB	FJB	562765	male	AE48.J1	RHConsole	563679	male

CONNECTORS LIST

No	Location	Part #	Gender	No	Location	Part #	Gender
AE48.J2	RHConsole	564037	female	B96B	Engine_Cmpt	563823	male
AE48.J3	RHConsole	565957	male	B97	Engine_Cmpt	563816	male
AE49.J1	RJB	563679	male	B98	Engine_Cmpt	563817	male
AE49.J2	RJB	564037	male	B115A	EngineCmpt.	564226	male
AE49.J3	RJB	565957	male	B142C	CondensorCmpt.	563793	male
AE50.J1	RJB	563679	male	B310	EngineCmpt.	565967	male
AE50.J2	RJB	564037	male	C1	FJB	563589	male
AE50.J3	RJB	565957	male	C1	FJB	563590	female
AE51.J1	RJB	563679	male	C1S	FJB	563589	male
AE51.J2	RJB	564037	female	C1S	FJB	563590	female
AE51.J3	RJB	565957	male	C2	Service_Cmpt	563580	male
AE52.J1	RJB	563679	male	C2	Service_Cmpt	563581	female
AE52.J2	RJB	564037	female	C2A	FJB	563580	male
AE52.J3	RJB	565957	male	C2A	FJB	563581	female
AE54.J1	EvaporatorCmpt.	563679	male	C2B	FJB	564034	male
AE54.J2	EvaporatorCmpt.	564037	female	C2B	FJB	564035	female
AE54.J3	EvaporatorCmpt.	565957	male	C3_plug	RJB	563589	male
AE55.J1	Dash	563679	male	C3_socket	RJB	563590	female
AE55.J2	Dash	564037	female	C3S	RJB	563593	male
AE55.J3	Dash	564004	male	C3S	RJB	563590	female
AE56.J1	Dash	563679	male	C4	FJB	563580	male
AE56.J2	Dash	564037	male	C4	FJB	563581	female
AE56.J3	Dash	564004	male	C5	FJB	563589	male
AE57.J1	3rd_RH_Lugg_Cmpt	563679	male	C5	FJB	563590	female
AE57.J2	3rd_RH_Lugg_Cmpt	564037	male	C5S	FJB	563589	male
AE57.J3	3rd_RH_Lugg_Cmpt	564004	male	C5S	FJB	563590	female
AE58.J1	SlideoutPanel	563679	male	C6	FJB	563582	male
AE58.J2	SlideoutPanel	564037	male	C6	FJB	563583	female
AE58.J3	SlideoutPanel	565957	male	C7	Service_Cmpt	562566	male
AE59.J1	SlideoutPanel	563679	male	C7	Service_Cmpt	562565	female
AE59.J2	SlideoutPanel	564037	male	C8	FJB	563227	male
AE59.J3	SlideoutPanel	565957	male	C8	FJB	563614	female
AltLL.A	EngineCmpt.	563746	female	C9	RJB	561986	male
AltLL.B	EngineCmpt.	560815	female	C9	RJB	561987	female
AltLL.C	EngineCmpt.	564469	female	C10	Engine_Cmpt	562477	male
AltUL.A	EngineCmpt.	563746	female	C10	Engine_Cmpt	562479	female
AltUL.B	EngineCmpt.	560815	female	C11	Service_Cmpt	563580	male
AltUL.C	EngineCmpt.	564469	female	C11	Service_Cmpt	563581	female
AltUR.A	EngineCmpt.	563746	female	C12	Engine_Cmpt	562581	male
AltUR.B	EngineCmpt.	560815	female	C12	Engine_Cmpt	562583	female
AltUR.C	EngineCmpt.	564469	female	C13_plug	RH_Console	563589	male
B85	Engine_Cmpt	563815	male	C13_socket	RH_Console	563590	female
B96	Engine_Cmpt	563821	male	C13S	RH_Console	563589	male

CONNECTORS LIST

No	Location	Part #	Gender	No	Location	Part #	Gender
C13S	RH_Console	563590	female	C50	RJB	563226	male
C14	FrontVehicle	562581	male	C50	RJB	563613	female
C14	FrontVehicle	562583	female	C52	EvaporatorCmpt.	563618	male
C15A	Evap_Cmpt	568110	male	C52	EvaporatorCmpt.	563616	female
C15A	Evap_Cmpt	568109	female	C54	EngineCmpt.	563226	male
C17	RJB	560195	male	C54	EngineCmpt.	563613	female
C17	RJB	560169	female	C54A	EngineCmpt.	568110	male
C18	FJB	561986	male	C54A	EngineCmpt.	568109	female
C18	FJB	561987	female	C54B	EngineCmpt.	563589	male
C19	RJB	561986	male	C54B	EngineCmpt.	563590	female
C19	RJB	561987	female	C58	CondensorCmpt.	564567	male
C23	Evap_Cmpt	564034	male	C58	CondensorCmpt.	564568	female
C23	Evap_Cmpt	564035	female	C58A	CondensorCmpt.	564258	male
C24_plug	Evap_Cmpt	561690	male	C58A	CondensorCmpt.	566037	female
C24_socket	Evap_Cmpt	561566	female	C59	3rdLuggCmpt.	561643	male
C26	UreaCmpt.	563226	male	C59	3rdLuggCmpt.	561642	female
C26	UreaCmpt.	563613	female	C61	Fr_Service_Door	561669	male
C26A	UreaCmpt.	568110	male	C61	Fr_Service_Door	561670	female
C26A	UreaCmpt.	568109	female	C62	Fr_Service_Door	562566	male
C26B	UreaCmpt.	563227	male	C62	Fr_Service_Door	562565	female
C26B	UreaCmpt.	563614	female	C64	EngineCmpt.	568110	male
C29	WCL_System	563651	male	C64	EngineCmpt.	568109	female
C29	WCL_System	563652	female	C71	FJB	561646	male
C30	WCL_System	561710	male	C71	FJB	561645	female
C30	WCL_System	561709	female	C72	FJB	561646	male
C32W	3rd_RH_Lugg_Cmpt	561640	male	C72	FJB	561645	female
C32W	3rd_RH_Lugg_Cmpt	561639	female	C74	FJB	561645	female
C33	3rd_RH_Lugg_Cmpt	564034	male	C74	FJB	561646	male
C33	3rd_RH_Lugg_Cmpt	564035	female	C80	EvaporatorCmpt.	562477	male
C34	RH_Console	561986	male	C80	EvaporatorCmpt.	562479	female
C34	RH_Console	561987	female	C81	1st_Lugg_Cmpt	562477	male
C39A	EngineCmpt.	561782	male	C81	1st_Lugg_Cmpt	562479	female
C39A	EngineCmpt.	561781	female	C82	1st_Lugg_Cmpt	562477	male
C40	Dash	562485	male	C82	1st_Lugg_Cmpt	562479	female
C40	Dash	562486	female	C83	2nd_Lugg_Cmpt	562477	male
C44_plug	FJB	561577	male	C83	2nd_Lugg_Cmpt	562479	female
C44_socket	FJB	561605	female	C84	2nd_Lugg_Cmpt	562477	male
C45	FJB	561643	male	C84	2nd_Lugg_Cmpt	562479	female
C45	FJB	561642	female	C85	4rd_Lugg_Cmpt	562477	male
C46	WCL_System	562549	male	C85	4rd_Lugg_Cmpt	562479	female
C46	WCL_System	562550	female	C86	4rd_Lugg_Cmpt	563618	male
C49	FJB	562005	male	C86	4rd_Lugg_Cmpt	563616	female
C49	FJB	561714	female	C87	EngineCmpt.	562485	male

CONNECTORS LIST

No	Location	Part #	Gender	No	Location	Part #	Gender
C87	EngineCmpt.	562486	female	C133_plug	Dash	561986	male
C88	3rd_RH_Lugg_Cmpt	563618	male	C133_socket	Dash	561987	female
C88	3rd_RH_Lugg_Cmpt	563616	female	C133A	Dash	561986	male
C89	CondensorCmpt.	562477	male	C133A	Dash	561987	female
C89	CondensorCmpt.	562479	female	C152	Cond_Cmpt	561611	male
C91	RJB	562285	male	C152	Cond_Cmpt	561610	female
C91	RJB	562282	female	C158	CondensorCmpt.	562477	male
C92A	EngineCmpt.	563226	male	C158	CondensorCmpt.	562479	female
C92A	EngineCmpt.	563613	female	C159	CondensorCmpt.	566033	male
C92C	EngineCmpt.	562581	male	C159	CondensorCmpt.	566034	female
C92C	EngineCmpt.	562583	female	C170	LH_Console	561637	male
C94_plug	FJB	563589	male	C170	LH_Console	561636	female
C94_socket	FJB	563590	female	C171	LH_Console	561646	male
C96	FJB	561643	male	C171	LH_Console	561645	female
C96	FJB	561642	female	C172	LHConsole	561637	male
C97	FJB	561643	male	C172	LHConsole	561635	female
C97	FJB	561642	female	C193_plug	RJB	563589	male
C100	EvaporatorCmpt.	562477	male	C193_socket	RJB	563590	female
C100	EvaporatorCmpt.	562479	female	C194	FJB	563589	male
C100S	EvaporatorCmpt.	562477	male	C194	FJB	563590	female
C100S	EvaporatorCmpt.	562479	female	C195	Dash	563347	male
C101	Service_Cmpt	561690	male	C195	Dash	560489	female
C101	Service_Cmpt	561566	female	C222	FJB	562477	male
C102A	ServiceCmpt.	563226	male	C222	FJB	562479	female
C102A	ServiceCmpt.	563613	female	C223	FJB	563227	male
C105_plug	FJB	562581	male	C223	FJB	563614	female
C105_socket	FJB	562583	female	C224	FJB	561637	male
C106_plug	FJB	562581	male	C224	FJB	561636	female
C106_socket	FJB	562583	female	C225	FJB	562650	male
C110	Dash	568110	male	C225	FJB	562649	female
C110	Dash	568109	female	C226	FJB	562650	male
C114	3rd_RH_Lugg_Cmpt	561550	male	C226	FJB	562649	female
C114	3rd_RH_Lugg_Cmpt	561667	female	C228	EngineCmpt.	562477	male
C119A	EngineDoor	568110	male	C228	EngineCmpt.	562479	female
C119A	EngineDoor	568109	female	C242	ServiceCmpt.	562789	male
C121	EngineDoor	562566	male	C242	ServiceCmpt.	565131	female
C121	EngineDoor	562565	female	C243	ServiceCmpt.	563347	male
C122	EngineDoor	562566	male	C243	ServiceCmpt.	563180	female
C122	EngineDoor	562565	female	C266	EntraceDoor	561640	male
C131A	EngineCmpt.	561782	male	C266	EntraceDoor	561639	female
C131A	EngineCmpt.	561781	female	C279	Service_Cmpt	562477	male
C131B	EngineCmpt.	561782	male	C279	Service_Cmpt	562479	female
C131B	EngineCmpt.	561781	female	C290	Rear_Vehicle	562477	male

CONNECTORS LIST

No	Location	Part #	Gender	No	Location	Part #	Gender
C290	Rear_Vehicle	562479	female	C607B_plug	FJB	561577	male
C304	2ndLuggCmpt.	560852	male	C607B_socket	FJB	561605	female
C304	2ndLuggCmpt.	560851	female	C617	Mirror_LH	563801	male
C305	2ndLuggCmpt.	560852	male	C617	Mirror_LH	563800	female
C305	2ndLuggCmpt.	560851	female	C618	Mirror_RH	563801	male
C380A	Dash	564222	male	C618	Mirror_RH	563800	female
C380A	Dash	564224	female	C_ALT	EngineCmpt.	562581	male
C397	RJB	562285	male	C_ALT	EngineCmpt.	562583	female
C397	RJB	562282	female	C_ALT3	EngineCmpt.	562477	male
C463	EngineCmpt.	568111	male	C_ALT3	EngineCmpt.	562479	female
C463	EngineCmpt.	568112	female	C_Mo9	Evap_Cmpt	561577	male
C464A	RJB	564222	male	C_Mo9	Evap_Cmpt	561605	female
C464A	RJB	564224	female	C_Se51	DriverSeat	563593	male
C551	3rdLuggCmpt.	561476	male	C_Se51	DriverSeat	563590	female
C551	3rdLuggCmpt.	561477	female	CCust	RJB	562477	male
C553	2ndLuggCmpt.	561476	male	CCust	RJB	562479	female
C553	2ndLuggCmpt.	561477	female	CF167	RH_Console	562350	male
C554	1stLuggCmpt.	561476	male	CF167	RH_Console	563764	female
C554	1stLuggCmpt.	561477	female	CInt1	FJB	563227	male
C555	1stLuggCmpt.	561476	male	CInt1	FJB	563614	female
C555	1stLuggCmpt.	561477	female	CInt2	FJB	563226	male
C556	3rdLuggCmpt.	561476	male	CInt2	FJB	563613	female
C556	3rdLuggCmpt.	561477	female	CSo1	SlideOutPanel	562581	male
C557	2ndLugg.Cmpt.	561476	male	CSo1	SlideOutPanel	562583	female
C557	2ndLuggCmpt.	561477	female	CSo2	SlideOutPanel	561643	male
C559	3rdLuggCmpt.	561476	male	CSo2	SlideOutPanel	561641	female
C559	3rdLuggCmpt.	561477	female	CSo5	SlideOutPanel	561847	male
C560	3rdLuggCmpt.	561476	male	CSo5	SlideOutPanel	561862	female
C560	3rdLuggCmpt.	561477	female	CSo7	SlideOutPanel	562581	male
C561	3rdLuggCmpt.	561476	male	CSo7	SlideOutPanel	562583	female
C561	3rdLuggCmpt.	561477	female	CT_In	Rear_Vehicle	563582	male
C562	3rdLuggCmpt.	561476	male	CT_In	Rear_Vehicle	563583	female
C562	3rdLuggCmpt.	561477	female	CT_Out	Rear_Vehicle	560478	female
C606_plug	FJB	561690	male	EI	EngineCmpt.	563739	male
C606_socket	FJB	561566	female	L1A	EngineCmpt.	562848	male
C606A	FJB	561577	male	L10	Dash	561247	male
C606A	FJB	561605	female	L16.A	FrontRoof	562615	female
C606B	FJB	561577	male	L16.B	FrontRoof	562615	female
C606B	FJB	561605	female	L17.A	FrontRoof	562615	female
C607_plug	FJB	561577	male	L17.B	FrontRoof	562615	female
C607_socket	FJB	561605	female	L18.A	EntraceDoor	561626	female
C607A_plug	FJB	561577	male	L18.B	EntraceDoor	561626	female
C607A_socket	FJB	561605	female	L21	FrontRoof	562486	female

CONNECTORS LIST

No	Location	Part #	Gender	No	Location	Part #	Gender
L22	FrontRoof	562486	female	L91A	RearVehiculeLH	562601	male
L23	FrontRoof	562486	female	L92A	RearVehicleRH	562601	male
L24	FrontRoof	562486	female	L93.A	RearOutsideLH	563069	female
L25	FrontRoof	562486	female	L93.B	RearOutsideLH	563069	female
L26	FrontRoof	562486	female	L94.A	RearOutsideRH	563069	female
L27	FrontRoof	562486	female	L94.B	RearOutsideRH	563069	female
L59	OutsidefrontRH	562623	male	L95	Outside_Front_LH	562902	female
L59A	OutsideFrontRH	563366	male	L96	Outside_Front_RH	562902	female
L59B	OutsideFrontRH	562623	male	L97.A	Outside_Front_LH	563069	female
L60	OutsideFrontLH	562623	male	L97.B	Outside_Front_LH	563069	female
L60A	OutsideFrontLH	563366	male	L98.A	EntranceDoor	563069	female
L60B	OutsideFrontLH	562623	male	L98.B	EntraceDoor	563069	female
L61	OutsideFrontRH	562601	male	L120	DriverSeat	562237	female
L62	OutsideFrontLH	562601	male	L173	EngineCmpt.	563590	female
L63	FrontSideRH	562155	male	L174A	EngineCmpt.	563590	female
L64	OutsideFrontRH	562155	male	L176	3rd_Lugg_Cmpt	561247	male
L65	FrontSideLH	562155	male	L177	3rd_Lugg_Cmpt	561247	male
L66	OutsideFrontLH	562155	male	L178	4thLuggCmpt.	561247	male
L67	3rdLuggCmpt.	562155	male	L179	4thLuggCmpt.	561247	male
L68	3rdLuggCmpt.	562155	male	L180	2nd_Lugg_Cmpt	561247	male
L69	EvapCmpt.	562155	male	L181	2nd_Lugg_Cmpt	561247	male
L70	EvapCmpt.	562155	male	L182	1st_Lugg_Cmpt	561247	male
L71A	RearVehicleLH	562601	male	L183	1st_Lugg_Cmpt	561247	male
L72	Rear_VehicleLH	562155	male	L184	ServiceCmpt.	561247	male
L73A	RearVehicleRH	562601	male	L185.A	Dash	561539	male
L74	RearVehicleRH	562155	male	L185.B	Dash	561539	male
L75	RearVehicleLH	562155	male	L186.A	Dash	561539	male
L76	RearVehicleRH	562155	male	L186.B	Dash	561539	male
L77A	RearVehicleRH	562601	male	L187	Engine_Cmpt	561690	male
L78A	RearVehicleRH	562601	male	L193.A	Dash	560488	female
L79A	RearVehicleLH	562601	male	L193.B	Dash	560488	female
L80A	RearVehicleLH	562601	male	L194.A	Dash	562019	female
L81.A	DPFDoor	562835	female	L194.B	Dash	560488	female
L81.B	DFPDoor	562834	male	L195.A	Dash	560488	female
L82A	EngineDoor	562348	female	L195.B	Dash	560488	female
L83A	EngineDoor	562348	female	L199	EngineCmpt.	562848	male
L84	RearRoof	562486	female	L203	RH_Console	561690	male
L85	RearRoof	562486	female	L204	WCL_Upper_Door	562803	male
L86	RearRoof	562486	female	L205	EvapCmpt.	562485	male
L87	RearRoof	562486	female	L206	WCL_Upper_Door	562803	male
L88	RearRoof	562486	female	L207.A	WCL_System	561699	female
L89	RearRoof	562486	female	L207.B	WCL_System	561701	female
L90	RearRoof	562486	female	L207.C	WCL_System	561701	female

CONNECTORS LIST

No	Location	Part #	Gender	No	Location	Part #	Gender
L207.D	WCL_System	561699	female	Mo35	3rdLuggCmpt.RH	564161	male
L207.E	WCL_System	561701	female	Mo36	CompressorDoor	564161	male
L207.F	WCL_System	561699	female	Mo37	4thLuggCmpt.RH	564161	male
L207.G	WCL_System	561699	female	Mo38	4thLuggCmpt.LH	564161	male
L207.H	WCL_System	560926	female	Mo40	1stLuggCmpt.LH	561477	female
L207.I	WCL_System	560926	female	Mo41	2ndLuggCmpt.LH	561477	female
L282	Preheater_Cmpt	561690	male	Mo42	3rdLuggCmpt.LH	561477	female
L285.A	Rear_Vehicle	562835	female	Mo43	3rdLuggCmpt.LH	561477	female
L285.B	Rear_Vehicle	562834	male	Mo50	FrontAxleCmpt.	561690	male
L286.A	Rear_Vehicle	562835	female	Mo54	Service_Cmpt	562474	male
L286.B	Rear_Vehicle	562834	male	Mo55	EntraceDoor	563626	male
L298A	EngineCmpt.	563590	female	Mo65	EngineCmpt.	568089	male
L304	OutsideLuggDoorLH	562155	male	Mo67	EngineCmpt.	568089	male
L305	OutsideLuggDoorRH	562155	male	Mo68	EngineCmpt.	568089	male
L306	Radiator_Door	562155	male	Mo69	EngineCmpt.	568089	male
L307	Radiator_Door	562155	male	Mo70	EngineCmpt.	568089	male
L309	RJB	561247	male	Mo71	EngineCmpt.	568089	male
L350A.A	RearAxleCmpt.	564552	male	Mo72	EngineCmpt.	568089	male
L350A.B	RearAxleCmpt.	563340	male	Mo73	EngineCmpt.	568089	male
L350A.C	RearAxleCmpt.	562251	male	MoSO1	FrontSlideOut	561967	male
Mo3	Dash	561667	female	MoSO2	RearSlideOut	561967	male
Mo4	Dash	562076	male	PC1	CantrackCable	562650	male
Mo7	Cond_Cmpt	563691	male	PC1	CantrackCable	562649	female
Mo8	Cond_Cmpt	563691	male	Pot1.A	Dash	560488	female
Mo11	CondensorCmpt.	568089	male	Pot1.B	Dash	560488	female
Mo12	Engine_Cmpt	561690	male	Pot1.C	Dash	560488	female
Mo15	Front_Ceiling	560900	female	R3	RJB	563409	male
Mo16	Front_Ceiling	560900	female	R6	Dash	564496	male
Mo17	RH_Console	563626	male	R7	Dash	564496	male
Mo19	Fr_Service_Door	562474	male	R12	Evap_Cmpt	563409	male
Mo20	Fr_Service_Door	562474	male	R21	FJB	560525	male
Mo22	RH_Console	561186	male	R27	Dash	564496	male
Mo24	RH_Console	562348	female	R29	RJB	563409	male
Mo25	RH_Console	562348	female	R30	FJB	564496	male
Mo26	EntraceDoor	564161	male	R31	FJB	564496	male
Mo27	Cond_Cmpt	563691	male	R36	Dash	564496	male
Mo28	Cond_Cmpt	563691	male	R37	Dash	564496	male
Mo29	RJB	563590	female	R38	FJB	564496	male
Mo30	1stLuggCmpt.LH	564161	male	R47	WCL_System	564496	male
Mo31	1stLuggCmpt.RH	564161	male	Res3	RJB	563590	female
Mo32	2ndLuggCmpt.LH	564161	male	Res4	FJB	563590	female
Mo33	2ndLuggCmpt.RH	564161	male	Res6	FJB	563590	female
Mo34	3rdLuggCmpt.LH	564161	male	Res7	Dashboard	563590	female

CONNECTORS LIST

No	Location	Part #	Gender	No	Location	Part #	Gender
Res15	Engine_Cmpt	561782	male	Se37	Front_Axle_LH	641132	female
Res19	FJB	563590	female	Se38	Front_Axle_RH	641132	female
Res20	FJB	563590	female	Se39	Rear_Axle_LH	641132	female
Res31	UreaCmpt.	562350	male	Se40	Rear_Axle_LH	641132	female
Res32	UreaCmpt.	563764	female	Se45	ServiceCmpt.	563409	male
Res53.A	CondensorCmpt.	563590	female	Se46	RearAxleCmpt.	562348	female
Res99	Dash	563590	female	Se49	EngineCmpt.	561690	male
RSO1_1	SlideOutPanel	564496	male	Se51	DriverSeat	563589	male
RSO1_2	SlideOutPanel	564496	male	Se53	Service_Cmpt	563159	female
RSO2_1	SlideOutPanel	564496	male	Se54	Service_Cmpt	563159	female
RSO2_2	SlideOutPanel	564496	male	Se55	Service_Cmpt	563159	female
Se11.A	Cond_Cmpt	560082	female	Se56	WCL	562884	female
Se11.B	Cond_Cmpt	560082	female	Se60	Service_Cmpt	563409	male
Se11.C	Cond_Cmpt	560082	female	Se62	WCL	561690	male
Se13	Engine_Cmpt	562350	male	Se63	RearAxleCmpt.	641132	female
Se14.A	Driver_Area	561782	male	Se64	RearAxleCmpt.	641132	female
Se14.B	Driver_Area	561781	female	Se65	Dash	564042	female
Se15.A	EntraceDoor	560488	female	Se66	FrontAxleCmpt.	564039	female
Se15.B	EntraceDoor	560488	female	Se67	ServiceCmpt.	563159	female
Se15.C	EntraceDoor	560488	female	Se69	ServiceCmpt.	563159	female
Se16.A	EntraceDoor	562651	female	Se94	WCL	562877	female
Se16.B	EntraceDoor	562651	female	Se100	WCL_Upper_Door	562479	female
Se17.A	EntraceDoor	562291	female	SESO1	SlideOutPanel	563159	female
Se17.B	EntraceDoor	562291	female	SeSO2	SlideOutFRLH	562479	female
Se17.C	EntraceDoor	562291	female	SeSO3	SlideOutFRLH	562479	female
Se18	ServiceCmpt.	561566	female	SeSO5	SlideOutRrLH	562479	female
Se19_P	Service_Cmpt	563677	male	SeSO6	SlideOutRrLH	562479	female
Se19_S	Service_Cmpt	563677	male	shell1_1617	Driver_Area	562471	male
Se20	Evap_Cmpt	562426	male	So3	RHConsole	641385	male
Se21	Dash	561248	female	So7	Service_Cmpt	561566	female
Se23	EngineCmpt.	563159	female	So8	ServiceCmpt.	641385	male
Se23A	EngineCmpt.	563159	female	So9	EngineCmpt.	560016	female
Se24	EngineCmpt.	563758	female	So11	Cond_Cmpt	561566	female
Se24A	EngineCmpt.	563758	female	So13	Evap_Cmpt	563204	female
Se25	EvapCmpt.	561248	female	So17	Service_Cmpt	562848	male
Se29	Engine_Cmpt	561566	female	So21	Front_Axle_Cmpt	564046	female
Se30	EngineCmpt.	562877	female	So22	Front_Axle_Cmpt	564046	female
Se31	EngineCmpt.	562877	female	So23	Rear_Axle_Cmpt	564046	female
Se32	Rear_Axle_Cmpt	562426	male	So24	Rear_Axle_Cmpt	564046	female
Se33	Rear_Axle_Cmpt	562856	male	So27	RearAxleCmpt.	564045	female
Se34	Rear_Axle_Cmpt	562426	male	So28	ServiceCmpt.	641385	male
Se35	Rear_Axle_Cmpt	562426	male	So29	ServiceCmpt.	641385	male
Se36	Rear_Axle_Cmpt	562427	male	So30	ServiceCmpt.	641385	male

CONNECTORS LIST

No	Location	Part #	Gender	No	Location	Part #	Gender
So31	ServiceCmpt.	641385	male	Sw46.A	3rd_Lugg_Cmpt	562403	female
So32	ServiceCmpt.	641385	male	Sw46.B	3rdLuggCmpt.	562403	female
So36	EngineCmpt.	561690	male	Sw46A.A	3rd_RH_Lugg_Cmpt	562403	female
So50	RearAxleCmpt.	564046	female	Sw46A.B	3rd_RH_Lugg_Cmpt	562403	female
So52	FrontAxleCmpt.	564045	female	Sw47.A	4thLuggCmpt.	562403	female
spBar4	EngineCmpt.	564135	male	Sw47.B	4thLuggCmpt.	562403	female
spBar5	EngineCmpt.	564135	male	Sw48.A	4thLuggCmpt.	562403	female
spBar6	EngineCmpt.	564135	male	Sw48.B	4thLuggCmpt.	562403	female
spBar7	CondCmpt.	564135	male	Sw49.A	2nd_Lugg_Cmpt	562403	female
spBar11	EngineCmpt.	564135	male	Sw49.B	2ndLuggCmpt.	562403	female
spBar12	EngineCmpt.	564135	male	Sw50.A	2nd_Lugg_Cmpt	562403	female
spBar13	EngineCmpt.	564135	male	Sw51.A	1st_Lugg_Cmpt	562403	female
spBar14	EngineCmpt.	564135	male	Sw52.A	1st_Lugg_Cmpt	562403	female
spBar15	EngineCmpt.	564135	male	Sw58.A	EngineCmpt.	563135	male
spBar16	EngineCmpt.	564135	male	Sw59	EngineCmpt.	563135	male
spBar19	CondCmpt.	564135	male	Sw63A	LHConsole	562763	male
spBar20	CondCmpt.	564135	male	Sw64.A	ServiceCmpt.	560815	female
spBar21	CondCmpt.	564135	male	Sw64.B	Ssp	560815	female
spBar22	EngineCmpt.	564135	male	Sw82	RJB	563135	male
spBar23	EngineCmpt.	564135	male	Sw83.A	Dash	560082	female
spBar24	EngineCmpt.	564135	male	Sw83.B	Dash	560815	female
Sw1.C258	Driver_Area	561188	female	Sw83.C	Dash	560082	female
Sw1.C259	Driver_Area	561186	male	Sw83.D	Dash	560815	female
Sw2	Dash	562763	male	Sw85	LH_Console	562749	male
Sw3	Dash	562763	male	Sw99	Dash	562763	male
Sw4	Dash	562763	male	Sw102	Dash	562763	male
Sw6	Dash	562763	male	Sw103A	LHConsole	562763	male
Sw14	Dash	562763	male	Sw104	Dash	562763	male
Sw16	Dash	562763	male	Sw107.A	LHConsole	561457	female
Sw17	Dash	562763	male	Sw107.B	LHConsole	561457	female
Sw18A	LH_Console	562763	male	Sw107.C	LHConsole	561457	female
Sw20	Dashboard	562763	male	Sw107.D	LHConsole	561457	female
Sw24	Dash	562763	male	Sw107.E	LHConsole	561457	female
Sw24A	Dash	562763	male	Sw107.F	LHConsole	561457	female
Sw34	Dash	562763	male	Sw107.G	LHConsole	561457	female
Sw35	LHConsole	562763	male	Sw107.H	LHConsole	561457	female
Sw38	LH_Console	562763	male	Sw107.J	LHConsole	561457	female
Sw40	LH_Console	561690	male	Sw107.K	LHConsole	561457	female
Sw41	LH_Console	562749	male	Sw108	LHConsole	562763	male
Sw42	WCL_System	561636	female	Sw109.A	1st_Lugg_LH	560079	female
Sw44.A	ServiceCmpt.	562403	female	Sw109.B	1st_Lugg_LH	560079	female
Sw45.A	3rd_Lugg_Cmpt	562403	female	Sw110.A	1st_Lugg_RH	560079	female
Sw45.B	3rdLuggCmpt.	562403	female	Sw110.B	1st_Lugg_RH	560079	female

CONNECTORS LIST

No	Location	Part #	Gender				
Sw111.A	2ndLuggCmpt.	560079	female				
Sw111.B	2ndLuggCmpt.	560079	female				
Sw112.A	2ndLuggCmpt.	560079	female				
Sw112.B	2ndLuggCmpt.	560079	female				
Sw113.A	2ndLuggCmpt.	560079	female				
Sw113.B	2ndLuggCmpt.	560079	female				
Sw114.A	3rd_Lugg_RH	560079	female				
Sw114.B	3rd_Lugg_RH	560079	female				
Sw115.A	Compr_Door	560079	female				
Sw115.B	Compr_Door	560079	female				
Sw122	ServiceCmpt.	562763	male				
Sw137	Dash	562763	male				
Sw156	LH_Console	562763	male				
Sw157	Dash	562763	male				
Sw158	Dash	562763	male				
Sw165A	RHConsole	562763	male				
Sw166	RHConsole	562763	male				
SwSo1	FrontSlideOut	561552	female				
SwSo2	RearSlideOut	561552	female				
Term106	RJB	{part_no564189}	N/A				
Term107	RJB	{part_no564189}	N/A				
VECF1	FJB	563186	male				
VECF2	FJB	563183	male				
VECF3	FJB	563185	male				
VECF4	FJB	563182	male				
VECF9	FJB	563448	male				
VECF10	FJB	563181	male				
VECF11	FJB	563184	male				
VECF12	FJB	563187	male				
VECR1	RJB	563186	male				
VECR2	RJB	563183	male				
VECR3	RJB	563185	male				
VECR4	RJB	563182	male				
VECR9	RJB	563448	male				
VECR10	RJB	563181	male				
VECR11	RJB	563184	male				
VECR12	RJB	563187	male				
VECT2	Rear_Vehicle	563716	male				
VECT3	RearVehicle	563718	male				
VECT4	RearVehicle	563714	male				
Y80	Engine_Cmpt	563789	male				
Y81	Cond_Cmpt	563793	male				

CONNECTORS LIST

No	Location	Part #	Gender	No	Location	Part #	Gender
A1	RJB	563975	male	A81.JC	FJB	562957	male
A2	FJB	563984	male	A83	Parcelrack	565970	female
A3	Dash	562363	male	A96	FJB	564073	female
A4.A	Service_Cmpt	562428	female	A97	Dash	563226	male
A4.B	Service_Cmpt	561188	female	A97A	Dash	563226	male
A5	Service_Cmpt	562428	female	A97A	Dash	563613	female
A6	Engine_Cmpt	562427	male	A97B	Dash	563226	male
A7	Rear_Axle_Cmpt	563979	male	A97B	Dash	563613	female
A9.Cx1	FJB	564041	female	A99	FJB	564205	male
A9.Cx2	FJB	563678	male	A100	Front_Axle_Cmpt	563758	female
A9.Cx3	FJB	564037	female	A101	Rear_RH_Axle_Cmpt	563758	female
A9.Cx4	FJB	564038	female	A102	Rear_RH_Axle_Cmpt	563758	female
A14.A	Dash	562766	male	A103	Dash	562070	female
A14.B	Dash	562767	male	A106	FrontVehicle	565974	male
A14.C	Dash	562765	male	A114A	Dash	564252	male
A15	Dash	562464	male	A130	Driver_Area	563226	male
A18.J1	FJB	562794	male	A131.A	Engine_Cmpt	561782	male
A18.J2	FJB	562650	male	A131.B	Engine_Cmpt	561781	female
A24.A	RH_Console	561890	male	A137A	CondensorCmpt.	20429843	male
A24.B	RH_Console	561566	female	A138	Cond_Cmpt	563787	male
A24.C	RH_Console	561889	female	A139	Dash	564501	male
A27	Service_Cmpt	562929	male	AE41.J1	FJB	563679	male
A28	Service_Cmpt	562928	male	AE41.J2	FJB	564037	female
A30.A	Dash	561611	male	AE41.J3	FJB	564004	male
A30.C	Dash	561889	female	AE42.J1	FJB	563679	male
A31.J1	Dash	562780	male	AE42.J2	FJB	564037	female
A31.J2	Dash	562842	male	AE42.J3	FJB	564004	male
A31.J3	Dash	562464	male	AE43.J1	FJB	563679	male
A31.J4	Dash	562465	male	AE43.J2	FJB	564037	male
A31.J5	Dash	563071	male	AE43.J3	FJB	565957	male
A34.J	EngineCmpt.	568118	male	AE44.J1	FJB	563679	male
A34.K	EngineCmpt.	564270	male	AE44.J2	FJB	564037	female
A34.L	EngineCmpt.	564269	male	AE44.J3	FJB	565957	male
A36.JA	FJB	562767	male	AE45.J1	FJB	563679	male
A36.JB	FJB	562765	male	AE45.J2	FJB	564037	female
A36.JC	FJB	562957	male	AE45.J3	FJB	565957	male
A40.A	EngineCmpt.	561668	male	AE46.J1	FJB	563679	male
A77	Parcelrack	564547	male	AE46.J2	FJB	564037	female
A78	Parcelrack	562583	female	AE46.J3	FJB	565957	male
A79	Parcelrack	562583	female	AE47.J1	RHConsole	563679	male
A80	Parcelrack	562479	female	AE47.J2	RHConsole	564037	female
A81.JA	FJB	562767	male	AE47.J3	RHConsole	565957	male
A81.JB	FJB	562765	male	AE48.J1	RHConsole	563679	male

CONNECTORS LIST

No	Location	Part #	Gender	No	Location	Part #	Gender
AE48.J2	RHConsole	564037	female	B96B	Engine_Cmpt	563823	male
AE48.J3	RHConsole	565957	male	B97	Engine_Cmpt	563816	male
AE49.J1	RJB	563679	male	B98	Engine_Cmpt	563817	male
AE49.J2	RJB	564037	male	B115A	EngineCmpt.	564226	male
AE49.J3	RJB	565957	male	B142C	CondensorCmpt.	563793	male
AE50.J1	RJB	563679	male	B310	EngineCmpt.	565967	male
AE50.J2	RJB	564037	male	C1	FJB	563589	male
AE50.J3	RJB	565957	male	C1	FJB	563590	female
AE51.J1	RJB	563679	male	C1S	FJB	563589	male
AE51.J2	RJB	564037	female	C1S	FJB	563590	female
AE51.J3	RJB	565957	male	C2	Service_Cmpt	563580	male
AE52.J1	RJB	563679	male	C2	Service_Cmpt	563581	female
AE52.J2	RJB	564037	female	C2A	FJB	563580	male
AE52.J3	RJB	565957	male	C2A	FJB	563581	female
AE54.J1	EvaporatorCmpt.	563679	male	C2B	FJB	564034	male
AE54.J2	EvaporatorCmpt.	564037	female	C2B	FJB	564035	female
AE54.J3	EvaporatorCmpt.	565957	male	C3_plug	RJB	563589	male
AE55.J1	Dash	563679	male	C3_socket	RJB	563590	female
AE55.J2	Dash	564037	female	C3S	RJB	563593	male
AE55.J3	Dash	564004	male	C3S	RJB	563590	female
AE56.J1	Dash	563679	male	C4	FJB	563580	male
AE56.J2	Dash	564037	male	C4	FJB	563581	female
AE56.J3	Dash	564004	male	C5	FJB	563589	male
AE57.J1	3rd_RH_Lugg_Cmpt	563679	male	C5	FJB	563590	female
AE57.J2	3rd_RH_Lugg_Cmpt	564037	male	C5S	FJB	563589	male
AE57.J3	3rd_RH_Lugg_Cmpt	564004	male	C5S	FJB	563590	female
AE58.J1	SlideoutPanel	563679	male	C6	FJB	563582	male
AE58.J2	SlideoutPanel	564037	male	C6	FJB	563583	female
AE58.J3	SlideoutPanel	565957	male	C7	Service_Cmpt	562566	male
AE59.J1	SlideoutPanel	563679	male	C7	Service_Cmpt	562565	female
AE59.J2	SlideoutPanel	564037	male	C8	FJB	563227	male
AE59.J3	SlideoutPanel	565957	male	C8	FJB	563614	female
AltLL.A	EngineCmpt.	563746	female	C9	RJB	561986	male
AltLL.B	EngineCmpt.	560815	female	C9	RJB	561987	female
AltLL.C	EngineCmpt.	564469	female	C10	Engine_Cmpt	562477	male
AltUL.A	EngineCmpt.	563746	female	C10	Engine_Cmpt	562479	female
AltUL.B	EngineCmpt.	560815	female	C11	Service_Cmpt	563580	male
AltUL.C	EngineCmpt.	564469	female	C11	Service_Cmpt	563581	female
AltUR.A	EngineCmpt.	563746	female	C12	Engine_Cmpt	562581	male
AltUR.B	EngineCmpt.	560815	female	C12	Engine_Cmpt	562583	female
AltUR.C	EngineCmpt.	564469	female	C13_plug	RH_Console	563589	male
B85	Engine_Cmpt	563815	male	C13_socket	RH_Console	563590	female
B96	Engine_Cmpt	563821	male	C13S	RH_Console	563589	male

CONNECTORS LIST

No	Location	Part #	Gender	No	Location	Part #	Gender
C13S	RH_Console	563590	female	C50	RJB	563226	male
C14	FrontVehicle	562581	male	C50	RJB	563613	female
C14	FrontVehicle	562583	female	C52	EvaporatorCmpt.	563618	male
C15A	Evap_Cmpt	568110	male	C52	EvaporatorCmpt.	563616	female
C15A	Evap_Cmpt	568109	female	C54	EngineCmpt.	563226	male
C17	RJB	560195	male	C54	EngineCmpt.	563613	female
C17	RJB	560169	female	C54A	EngineCmpt.	568110	male
C18	FJB	561986	male	C54A	EngineCmpt.	568109	female
C18	FJB	561987	female	C54B	EngineCmpt.	563589	male
C19	RJB	561986	male	C54B	EngineCmpt.	563590	female
C19	RJB	561987	female	C58	CondensorCmpt.	564567	male
C23	Evap_Cmpt	564034	male	C58	CondensorCmpt.	564568	female
C23	Evap_Cmpt	564035	female	C58A	CondensorCmpt.	564258	male
C24_plug	Evap_Cmpt	561690	male	C58A	CondensorCmpt.	566037	female
C24_socket	Evap_Cmpt	561566	female	C59	3rdLuggCmpt.	561643	male
C26	UreaCmpt.	563226	male	C59	3rdLuggCmpt.	561642	female
C26	UreaCmpt.	563613	female	C61	Fr_Service_Door	561669	male
C26A	UreaCmpt.	568110	male	C61	Fr_Service_Door	561670	female
C26A	UreaCmpt.	568109	female	C62	Fr_Service_Door	562566	male
C26B	UreaCmpt.	563227	male	C62	Fr_Service_Door	562565	female
C26B	UreaCmpt.	563614	female	C64	EngineCmpt.	568110	male
C29	WCL_System	563651	male	C64	EngineCmpt.	568109	female
C29	WCL_System	563652	female	C71	FJB	561646	male
C30	WCL_System	561710	male	C71	FJB	561645	female
C30	WCL_System	561709	female	C72	FJB	561646	male
C32W	3rd_RH_Lugg_Cmpt	561640	male	C72	FJB	561645	female
C32W	3rd_RH_Lugg_Cmpt	561639	female	C74	FJB	561645	female
C33	3rd_RH_Lugg_Cmpt	564034	male	C74	FJB	561646	male
C33	3rd_RH_Lugg_Cmpt	564035	female	C80	EvaporatorCmpt.	562477	male
C34	RH_Console	561986	male	C80	EvaporatorCmpt.	562479	female
C34	RH_Console	561987	female	C81	1st_Lugg_Cmpt	562477	male
C39A	EngineCmpt.	561782	male	C81	1st_Lugg_Cmpt	562479	female
C39A	EngineCmpt.	561781	female	C82	1st_Lugg_Cmpt	562477	male
C40	Dash	562485	male	C82	1st_Lugg_Cmpt	562479	female
C40	Dash	562486	female	C83	2nd_Lugg_Cmpt	562477	male
C44_plug	FJB	561577	male	C83	2nd_Lugg_Cmpt	562479	female
C44_socket	FJB	561605	female	C84	2nd_Lugg_Cmpt	562477	male
C45	FJB	561643	male	C84	2nd_Lugg_Cmpt	562479	female
C45	FJB	561642	female	C85	4rd_Lugg_Cmpt	562477	male
C46	WCL_System	562549	male	C85	2nd_Lugg_Cmpt	562479	female
C46	WCL_System	562550	female	C86	4rd_Lugg_Cmpt	563618	male
C49	FJB	562005	male	C86	4rd_Lugg_Cmpt	563616	female
C49	FJB	561714	female	C87	EngineCmpt.	562485	male

CONNECTORS LIST

No	Location	Part #	Gender	No	Location	Part #	Gender
C87	EngineCmpt.	562486	female	C133_plug	Dash	561986	male
C88	3rd_RH_Lugg_Cmpt	563618	male	C133_socket	Dash	561987	female
C88	3rd_RH_Lugg_Cmpt	563616	female	C133A	Dash	561986	male
C89	CondensorCmpt.	562477	male	C133A	Dash	561987	female
C89	CondensorCmpt.	562479	female	C152	Cond_Cmpt	561611	male
C91	RJB	562285	male	C152	Cond_Cmpt	561610	female
C91	RJB	562282	female	C158	CondensorCmpt.	562477	male
C92A	EngineCmpt.	563226	male	C158	CondensorCmpt.	562479	female
C92A	EngineCmpt.	563613	female	C159	CondensorCmpt.	566033	male
C92C	EngineCmpt.	562581	male	C159	CondensorCmpt.	566034	female
C92C	EngineCmpt.	562583	female	C170	LH_Console	561637	male
C94_plug	FJB	563589	male	C170	LH_Console	561636	female
C94_socket	FJB	563590	female	C171	LH_Console	561646	male
C96	FJB	561643	male	C171	LH_Console	561645	female
C96	FJB	561642	female	C172	LHConsole	561637	male
C97	FJB	561643	male	C172	LHConsole	561635	female
C97	FJB	561642	female	C193_plug	RJB	563589	male
C100	EvaporatorCmpt.	562477	male	C193_socket	RJB	563590	female
C100	EvaporatorCmpt.	562479	female	C194	FJB	563589	male
C100S	EvaporatorCmpt.	562477	male	C194	FJB	563590	female
C100S	EvaporatorCmpt.	562479	female	C195	Dash	563347	male
C101	Service_Cmpt	561690	male	C195	Dash	560489	female
C101	Service_Cmpt	561566	female	C222	FJB	562477	male
C102A	ServiceCmpt.	563226	male	C222	FJB	562479	female
C102A	ServiceCmpt.	563613	female	C223	FJB	563227	male
C105_plug	FJB	562581	male	C223	FJB	563614	female
C105_socket	FJB	562583	female	C224	FJB	561637	male
C106_plug	FJB	562581	male	C224	FJB	561636	female
C106_socket	FJB	562583	female	C225	FJB	562650	male
C110	Dash	568110	male	C225	FJB	562649	female
C110	Dash	568109	female	C226	FJB	562650	male
C114	3rd_RH_Lugg_Cmpt	561550	male	C226	FJB	562649	female
C114	3rd_RH_Lugg_Cmpt	561667	female	C228	EngineCmpt.	562477	male
C119A	EngineDoor	568110	male	C228	EngineCmpt.	562479	female
C119A	EngineDoor	568109	female	C242	ServiceCmpt.	562789	male
C121	EngineDoor	562566	male	C242	ServiceCmpt.	565131	female
C121	EngineDoor	562565	female	C243	ServiceCmpt.	563347	male
C122	EngineDoor	562566	male	C243	ServiceCmpt.	563180	female
C122	EngineDoor	562565	female	C266	EntraceDoor	561640	male
C131A	EngineCmpt.	561782	male	C266	EntraceDoor	561639	female
C131A	EngineCmpt.	561781	female	C279	Service_Cmpt	562477	male
C131B	EngineCmpt.	561782	male	C279	Service_Cmpt	562479	female
C131B	EngineCmpt.	561781	female	C290	Rear_Vehicle	562477	male

CONNECTORS LIST

No	Location	Part #	Gender	No	Location	Part #	Gender
C290	Rear_Vehicle	562479	female	C607B_plug	FJB	561577	male
C304	2ndLuggCmpt.	560852	male	C607B_socket	FJB	561605	female
C304	2ndLuggCmpt.	560851	female	C617	Mirror_LH	563801	male
C305	2ndLuggCmpt.	560852	male	C617	Mirror_LH	563800	female
C305	2ndLuggCmpt.	560851	female	C618	Mirror_RH	563801	male
C380A	Dash	564222	male	C618	Mirror_RH	563800	female
C380A	Dash	564224	female	C_ALT	EngineCmpt.	562581	male
C397	RJB	562285	male	C_ALT	EngineCmpt.	562583	female
C397	RJB	562282	female	C_ALT3	EngineCmpt.	562477	male
C463	EngineCmpt.	568111	male	C_ALT3	EngineCmpt.	562479	female
C463	EngineCmpt.	568112	female	C_Mo9	Evap_Cmpt	561577	male
C464A	RJB	564222	male	C_Mo9	Evap_Cmpt	561605	female
C464A	RJB	564224	female	C_Se51	DriverSeat	563589	male
C551	3rdLuggCmpt.	561476	male	C_Se51	DriverSeat	563590	female
C551	3rdLuggCmpt.	561477	female	CCust	RJB	562477	male
C553	2ndLuggCmpt.	561476	male	CCust	RJB	562479	female
C553	2ndLuggCmpt.	561477	female	CF167	RH_Console	562350	male
C554	1stLuggCmpt.	561476	male	CF167	RH_Console	563764	female
C554	1stLuggCmpt.	561477	female	CInt1	FJB	563227	male
C555	1stLuggCmpt.	561476	male	CInt1	FJB	563614	female
C555	1stLuggCmpt.	561477	female	CInt2	FJB	563226	male
C556	3rdLuggCmpt.	561476	male	CInt2	FJB	563613	female
C556	3rdLuggCmpt.	561477	female	CSo1	SlideOutPanel	562581	male
C557	2ndLugg.Cmpt.	561476	male	CSo1	SlideOutPanel	562583	female
C557	2ndLuggCmpt.	561477	female	CSo2	SlideOutPanel	561643	male
C559	3rdLuggCmpt.	561476	male	CSo2	SlideOutPanel	561641	female
C559	3rdLuggCmpt.	561477	female	CSo5	SlideOutPanel	561847	male
C560	3rdLuggCmpt.	561476	male	CSo5	SlideOutPanel	561862	female
C560	3rdLuggCmpt.	561477	female	CSo7	SlideOutPanel	562581	male
C561	3rdLuggCmpt.	561476	male	CSo7	SlideOutPanel	562583	female
C561	3rdLuggCmpt.	561477	female	CT_In	Rear_Vehicle	563582	male
C562	3rdLuggCmpt.	561476	male	CT_In	Rear_Vehicle	563583	female
C562	3rdLuggCmpt.	561477	female	CT_Out	Rear_Vehicle	560478	female
C606_plug	FJB	561690	male	EI	EngineCmpt.	563739	male
C606_socket	FJB	561566	female	L1A	EngineCmpt.	562848	male
C606A	FJB	561577	male	L10	Dash	561247	male
C606A	FJB	561605	female	L16.A	FrontRoof	562615	female
C606B	FJB	561577	male	L16.B	FrontRoof	562615	female
C606B	FJB	561605	female	L17.A	FrontRoof	562615	female
C607_plug	FJB	561577	male	L17.B	FrontRoof	562615	female
C607_socket	FJB	561605	female	L18.A	EntraceDoor	561626	female
C607A_plug	FJB	561577	male	L18.B	EntraceDoor	561626	female
C607A_socket	FJB	561605	female	L21	FrontRoof	562486	female

CONNECTORS LIST

No	Location	Part #	Gender	No	Location	Part #	Gender
L22	FrontRoof	562486	female	L91A	RearVehiculeLH	562601	male
L23	FrontRoof	562486	female	L92A	RearVehicleRH	562601	male
L24	FrontRoof	562486	female	L93.A	RearOutsideLH	563069	female
L25	FrontRoof	562486	female	L93.B	RearOutsideLH	563069	female
L26	FrontRoof	562486	female	L94.A	RearOutsideRH	563069	female
L27	FrontRoof	562486	female	L94.B	RearOutsideRH	563069	female
L59	OutsidefrontRH	562623	male	L95	Outside_Front_LH	562902	female
L59A	OutsideFrontRH	563366	male	L96	Outside_Front_RH	562902	female
L59B	OutsideFrontRH	562623	male	L97.A	Outside_Front_LH	563069	female
L60	OutsideFrontLH	562623	male	L97.B	Outside_Front_LH	563069	female
L60A	OutsideFrontLH	563366	male	L98.A	EntranceDoor	563069	female
L60B	OutsideFrontLH	562623	male	L98.B	EntraceDoor	563069	female
L61	OutsideFrontRH	562601	male	L120	DriverSeat	562237	female
L62	OutsideFrontLH	562601	male	L173	EngineCmpt.	563590	female
L63	FrontSideRH	562155	male	L174A	EngineCmpt.	563590	female
L64	OutsideFrontRH	562155	male	L176	3rd_Lugg_Cmpt	561247	male
L65	FrontSideLH	562155	male	L177	3rd_Lugg_Cmpt	561247	male
L66	OutsideFrontLH	562155	male	L178	4thLuggCmpt.	561247	male
L67	3rdLuggCmpt.	562155	male	L179	4thLuggCmpt.	561247	male
L68	3rdLuggCmpt.	562155	male	L180	2nd_Lugg_Cmpt	561247	male
L69	EvapCmpt.	562155	male	L181	2nd_Lugg_Cmpt	561247	male
L70	EvapCmpt.	562155	male	L182	1st_Lugg_Cmpt	561247	male
L71A	RearVehicleLH	562601	male	L183	1st_Lugg_Cmpt	561247	male
L72	Rear_VehicleLH	562155	male	L184	ServiceCmpt.	561247	male
L73A	RearVehicleRH	562601	male	L185.A	Dash	561539	male
L74	RearVehicleRH	562155	male	L185.B	Dash	561539	male
L75	RearVehicleLH	562155	male	L186.A	Dash	561539	male
L76	RearVehicleRH	562155	male	L186.B	Dash	561539	male
L77A	RearVehicleRH	562601	male	L187	Engine_Cmpt	561690	male
L78A	RearVehicleRH	562601	male	L193.A	Dash	560488	female
L79A	RearVehicleLH	562601	male	L193.B	Dash	560488	female
L80A	RearVehicleLH	562601	male	L194.A	Dash	562019	female
L81.A	DPFDoor	562835	female	L194.B	Dash	560488	female
L81.B	DFPDoor	562834	male	L195.A	Dash	560488	female
L82A	EngineDoor	562348	female	L195.B	Dash	560488	female
L83A	EngineDoor	562348	female	L199	EngineCmpt.	562848	male
L84	RearRoof	562486	female	L203	RH_Console	561690	male
L85	RearRoof	562486	female	L204	WCL_Upper_Door	562803	male
L86	RearRoof	562486	female	L205	EvapCmpt.	562485	male
L87	RearRoof	562486	female	L206	WCL_Upper_Door	562803	male
L88	RearRoof	562486	female	L207.A	WCL_System	561699	female
L89	RearRoof	562486	female	L207.B	WCL_System	561701	female
L90	RearRoof	562486	female	L207.C	WCL_System	561701	female

CONNECTORS LIST

No	Location	Part #	Gender	No	Location	Part #	Gender
L207.D	WCL_System	561699	female	Mo35	3rdLuggCmpt.RH	564161	male
L207.E	WCL_System	561701	female	Mo36	CompressorDoor	564161	male
L207.F	WCL_System	561699	female	Mo37	4thLuggCmpt.RH	564161	male
L207.G	WCL_System	561699	female	Mo38	4thLuggCmpt.LH	564161	male
L207.H	WCL_System	560926	female	Mo40	1stLuggCmpt.LH	561477	female
L207.I	WCL_System	560926	female	Mo41	2ndLuggCmpt.LH	561477	female
L282	Preheater_Cmpt	561690	male	Mo42	3rdLuggCmpt.LH	561477	female
L285.A	Rear_Vehicle	562835	female	Mo43	3rdLuggCmpt.LH	561477	female
L285.B	Rear_Vehicle	562834	male	Mo50	FrontAxleCmpt.	561690	male
L286.A	Rear_Vehicle	562835	female	Mo54	Service_Cmpt	562474	male
L286.B	Rear_Vehicle	562834	male	Mo55	EntraceDoor	563626	male
L298A	EngineCmpt.	563590	female	Mo65	EngineCmpt.	568089	male
L304	OutsideLuggDoorLH	562155	male	Mo67	EngineCmpt.	568089	male
L305	OutsideLuggDoorRH	562155	male	Mo68	EngineCmpt.	568089	male
L306	Radiator_Door	562155	male	Mo69	EngineCmpt.	568089	male
L307	Radiator_Door	562155	male	Mo70	EngineCmpt.	568089	male
L309	RJB	561247	male	Mo71	EngineCmpt.	568089	male
L350A.A	RearAxleCmpt.	564552	male	Mo72	EngineCmpt.	568089	male
L350A.B	RearAxleCmpt.	563340	male	Mo73	EngineCmpt.	568089	male
L350A.C	RearAxleCmpt.	562251	male	MoSO1	FrontSlideOut	561967	male
Mo3	Dash	561667	female	MoSO2	RearSlideOut	561967	male
Mo4	Dash	562076	male	PC1	CantrackCable	562650	male
Mo7	Cond_Cmpt	563691	male	PC1	CantrackCable	562649	female
Mo8	Cond_Cmpt	563691	male	Pot1.A	Dash	560488	female
Mo11	CondensorCmpt.	568089	male	Pot1.B	Dash	560488	female
Mo12	Engine_Cmpt	561690	male	Pot1.C	Dash	560488	female
Mo15	Front_Ceiling	560900	female	R3	RJB	563409	male
Mo16	Front_Ceiling	560900	female	R6	Dash	564496	male
Mo17	RH_Console	563626	male	R7	Dash	564496	male
Mo19	Fr_Service_Door	562474	male	R12	Evap_Cmpt	563409	male
Mo20	Fr_Service_Door	562474	male	R21	FJB	560525	male
Mo22	RH_Console	561186	male	R27	Dash	564496	male
Mo24	RH_Console	562348	female	R29	RJB	563409	male
Mo25	RH_Console	562348	female	R30	FJB	564496	male
Mo26	EntraceDoor	564161	male	R31	FJB	564496	male
Mo27	Cond_Cmpt	563691	male	R36	Dash	564496	male
Mo28	Cond_Cmpt	563691	male	R37	Dash	564496	male
Mo29	RJB	563590	female	R38	FJB	564496	male
Mo30	1stLuggCmpt.LH	564161	male	R47	WCL_System	564496	male
Mo31	1stLuggCmpt.RH	564161	male	Res3	RJB	563590	female
Mo32	2ndLuggCmpt.LH	564161	male	Res4	FJB	563590	female
Mo33	2ndLuggCmpt.RH	564161	male	Res6	FJB	563590	female
Mo34	3rdLuggCmpt.LH	564161	male	Res7	Dashboard	563590	female

CONNECTORS LIST

No	Location	Part #	Gender	No	Location	Part #	Gender
Res15	Engine_Cmpt	561782	male	Se37	Front_Axle_LH	641132	female
Res19	FJB	563590	female	Se38	Front_Axle_RH	641132	female
Res20	FJB	563590	female	Se39	Rear_Axle_LH	641132	female
Res31	UreaCmpt.	562350	male	Se40	Rear_Axle_LH	641132	female
Res32	UreaCmpt.	563764	female	Se45	ServiceCmpt.	563409	male
Res53.A	CondensorCmpt.	563590	female	Se46	RearAxleCmpt.	562348	female
Res99	Dash	563590	female	Se49	EngineCmpt.	561690	male
RSO1_1	SlideOutPanel	564496	male	Se51	DriverSeat	563589	male
RSO1_2	SlideOutPanel	564496	male	Se53	Service_Cmpt	563159	female
RSO2_1	SlideOutPanel	564496	male	Se54	Service_Cmpt	563159	female
RSO2_2	SlideOutPanel	564496	male	Se55	Service_Cmpt	563159	female
Se11.A	Cond_Cmpt	560082	female	Se56	WCL	562884	female
Se11.B	Cond_Cmpt	560082	female	Se60	Service_Cmpt	563409	male
Se11.C	Cond_Cmpt	560082	female	Se62	WCL	561690	male
Se13	Engine_Cmpt	562350	male	Se63	RearAxleCmpt.	641132	female
Se14.A	Driver_Area	561782	male	Se64	RearAxleCmpt.	641132	female
Se14.B	Driver_Area	561781	female	Se65	Dash	564042	female
Se15.A	EntraceDoor	560488	female	Se66	FrontAxleCmpt.	564039	female
Se15.B	EntraceDoor	560488	female	Se67	ServiceCmpt.	563159	female
Se15.C	EntraceDoor	560488	female	Se69	ServiceCmpt.	563159	female
Se16.A	EntraceDoor	562651	female	Se94	WCL	562877	female
Se16.B	EntraceDoor	562651	female	Se100	WCL_Upper_Door	562479	female
Se17.A	EntraceDoor	562291	female	SESO1	SlideOutPanel	563159	female
Se17.B	EntraceDoor	562291	female	SeSO2	SlideOutFRLH	562479	female
Se17.C	EntraceDoor	562291	female	SeSO3	SlideOutFRLH	562479	female
Se18	ServiceCmpt.	561566	female	SeSO5	SlideOutRrLH	562479	female
Se19_P	Service_Cmpt	563677	male	SeSO6	SlideOutRrLH	562479	female
Se19_S	Service_Cmpt	563677	male	shell1_1617	Driver_Area	562471	male
Se20	Evap_Cmpt	562426	male	So3	RHConsole	641385	male
Se21	Dash	561248	female	So7	Service_Cmpt	561566	female
Se23	EngineCmpt.	563159	female	So8	ServiceCmpt.	641385	male
Se23A	EngineCmpt.	563159	female	So9	EngineCmpt.	560016	female
Se24	EngineCmpt.	563758	female	So11	Cond_Cmpt	561566	female
Se24A	EngineCmpt.	563758	female	So13	Evap_Cmpt	563204	female
Se25	EvapCmpt.	561248	female	So17	Service_Cmpt	562848	male
Se29	Engine_Cmpt	561566	female	So21	Front_Axle_Cmpt	564046	female
Se30	EngineCmpt.	562877	female	So22	Front_Axle_Cmpt	564046	female
Se31	EngineCmpt.	562877	female	So23	Rear_Axle_Cmpt	564046	female
Se32	Rear_Axle_Cmpt	562426	male	So24	Rear_Axle_Cmpt	564046	female
Se33	Rear_Axle_Cmpt	562856	male	So27	RearAxleCmpt.	564045	female
Se34	Rear_Axle_Cmpt	562426	male	So28	ServiceCmpt.	641385	male
Se35	Rear_Axle_Cmpt	562426	male	So29	ServiceCmpt.	641385	male
Se36	Rear_Axle_Cmpt	562427	male	So30	ServiceCmpt.	641385	male

CONNECTORS LIST

No	Location	Part #	Gender	No	Location	Part #	Gender
So31	ServiceCmpt.	641385	male	Sw46.B	3rdLuggCmpt.	562403	female
So32	ServiceCmpt.	641385	male	Sw46A.A	3rd_RH_Lugg_Cmpt	562403	female
So36	EngineCmpt.	561690	male	Sw46A.B	3rd_RH_Lugg_Cmpt	562403	female
So50	RearAxleCmpt.	564046	female	Sw47.A	4thLuggCmpt.	562403	female
So52	FrontAxleCmpt.	564045	female	Sw47.B	4thLuggCmpt.	562403	female
spBar4	EngineCmpt.	564135	male	Sw48.A	4thLuggCmpt.	562403	female
spBar5	EngineCmpt.	564135	male	Sw48.B	4thLuggCmpt.	562403	female
spBar6	EngineCmpt.	564135	male	Sw49.A	2nd_Lugg_Cmpt	562403	female
spBar7	CondCmpt.	564135	male	Sw49.B	2ndLuggCmpt.	562403	female
spBar11	EngineCmpt.	564135	male	Sw50.A	2nd_Lugg_Cmpt	562403	female
spBar12	EngineCmpt.	564135	male	Sw51.A	1st_Lugg_Cmpt	562403	female
spBar13	EngineCmpt.	564135	male	Sw52.A	1st_Lugg_Cmpt	562403	female
spBar14	EngineCmpt.	564135	male	Sw58.A	EngineCmpt.	563135	male
spBar15	EngineCmpt.	564135	male	Sw59	EngineCmpt.	563135	male
spBar16	EngineCmpt.	564135	male	Sw63A	LHConsole	562763	male
spBar19	CondCmpt.	564135	male	Sw64.A	ServiceCmpt.	560815	female
spBar20	CondCmpt.	564135	male	Sw64.B	Ssp	560815	female
spBar21	CondCmpt.	564135	male	Sw82	RJB	563135	male
spBar22	EngineCmpt.	564135	male	Sw83.A	Dash	560082	female
spBar23	EngineCmpt.	564135	male	Sw83.B	Dash	560815	female
spBar24	EngineCmpt.	564135	male	Sw83.C	Dash	560082	female
Sw1.C258	Driver_Area	561188	female	Sw83.D	Dash	560815	female
Sw1.C259	Driver_Area	561186	male	Sw85	LH_Console	562749	male
Sw2	Dash	562763	male	Sw99	Dash	562763	male
Sw3	Dash	562763	male	Sw102	Dash	562763	male
Sw4	Dash	562763	male	Sw103A	LHConsole	562763	male
Sw6	Dash	562763	male	Sw104	Dash	562763	male
Sw14	Dash	562763	male	Sw107.A	LHConsole	561457	female
Sw16	Dash	562763	male	Sw107.B	LHConsole	561457	female
Sw17	Dash	562763	male	Sw107.C	LHConsole	561457	female
Sw18A	LH_Console	562763	male	Sw107.D	LHConsole	561457	female
Sw20	Dashboard	562763	male	Sw107.E	LHConsole	561457	female
Sw24	Dash	562763	male	Sw107.F	LHConsole	561457	female
Sw34	Dash	562763	male	Sw107.G	LHConsole	561457	female
Sw35	LHConsole	562763	male	Sw107.H	LHConsole	561457	female
Sw38	LH_Console	562763	male	Sw107.J	LHConsole	561457	female
Sw40	LH_Console	561690	male	Sw107.K	LHConsole	561457	female
Sw41	LH_Console	562749	male	Sw108	LHConsole	562763	male
Sw42	WCL_System	561636	female	Sw109.A	1st_Lugg_LH	560079	female
Sw44.A	ServiceCmpt.	562403	female	Sw109.B	1st_Lugg_LH	560079	female
Sw45.A	3rd_Lugg_Cmpt	562403	female	Sw110.A	1st_Lugg_RH	560079	female
Sw45.B	3rdLuggCmpt.	562403	female	Sw110.B	1st_Lugg_RH	560079	female
Sw46.A	3rd_Lugg_Cmpt	562403	female	Sw111.A	2ndLuggCmpt.	560079	female

CONNECTORS LIST

No	Location	Part #	Gender	No	Location	Part #	Gender
Sw111.B	2ndLuggCmpt.	560079	female	Y81	Cond_Cmpt	563793	male
Sw112.A	2ndLuggCmpt.	560079	female				
Sw112.B	2ndLuggCmpt.	560079	female				
Sw113.A	2ndLuggCmpt.	560079	female				
Sw113.B	2ndLuggCmpt.	560079	female				
Sw114.A	3rd_Lugg_RH	560079	female				
Sw114.B	3rd_Lugg_RH	560079	female				
Sw115.A	Compr_Door	560079	female				
Sw115.B	Compr_Door	560079	female				
Sw122	ServiceCmpt.	562763	male				
Sw137	Dash	562763	male				
Sw156	LH_Console	562763	male				
Sw157	Dash	562763	male				
Sw158	Dash	562763	male				
Sw165A		562763	male				
Sw166	RHConsole	562763	male				
SwSo1	FrontSlideOut	561552	female				
SwSo2	RearSlideOut	561552	female				
Term106	RJB	{part_no564189}	N/A				
Term107	RJB	{part_no564189}	N/A				
VECF1	FJB	563186	male				
VECF2	FJB	563183	male				
VECF3	FJB	563185	male				
VECF4	FJB	563182	male				
VECF9	FJB	563448	male				
VECF10	FJB	563181	male				
VECF11	FJB	563184	male				
VECF12	FJB	563187	male				
VECR1	RJB	563186	male				
VECR2	RJB	563183	male				
VECR3	RJB	563185	male				
VECR4	RJB	563182	male				
VECR9	RJB	563448	male				
VECR10	RJB	563181	male				
VECR11	RJB	563184	male				
VECR12	RJB	563187	male				
VECT2	Rear_Vehicle	563716	male				
VECT3	RearVehicle	563718	male				
VECT4	RearVehicle	563714	male				
Y80	Engine_Cmpt	563789	male				
Y81	Cond_Cmpt	563793	male				

CONNECTORS LIST

No	Location	Part #	Gender	No	Location	Part #	Gender
A1	RJB	563975	male	A81.JC	FJB	562957	male
A2	FJB	563984	male	A83	Parcelrack	565970	female
A3	Dash	562363	male	A96	FJB	564073	female
A4.A	Service_Cmpt	562428	female	A97	Dash	563226	male
A4.B	Service_Cmpt	561188	female	A97A	Dash	563226	male
A5	Service_Cmpt	562428	female	A97A	Dash	563613	female
A6	Engine_Cmpt	562427	male	A97B	Dash	563226	male
A7	Rear_Axle_Cmpt	563979	male	A97B	Dash	563613	female
A9.Cx1	FJB	564041	female	A99	FJB	564205	male
A9.Cx2	FJB	563678	male	A100	Front_Axle_Cmpt	563758	female
A9.Cx3	FJB	564037	female	A101	Rear_RH_Axle_Cmpt	563758	female
A9.Cx4	FJB	564038	female	A102	Rear_RH_Axle_Cmpt	563758	female
A14.A	Dash	562766	male	A103	Dash	562070	female
A14.B	Dash	562767	male	A106	FrontVehicle	565974	male
A14.C	Dash	562765	male	A114A	Dash	564252	male
A15	Dash	562464	male	A130	Driver_Area	563226	male
A18.J1	FJB	562794	male	A131.A	Engine_Cmpt	561782	male
A18.J2	FJB	562650	male	A131.B	Engine_Cmpt	561781	female
A24.A	RH_Console	561890	male	A137A	CondensorCmpt.	20429843	male
A24.B	RH_Console	561566	female	A138	Cond_Cmpt	563787	male
A24.C	RH_Console	561889	female	A139	Dash	564501	male
A27	Service_Cmpt	562929	male	AE41.J1	FJB	563679	male
A28	Service_Cmpt	562928	male	AE41.J2	FJB	564037	female
A30.A	Dash	561611	male	AE41.J3	FJB	564004	male
A30.C	Dash	561889	female	AE42.J1	FJB	563679	male
A31.J1	Dash	562780	male	AE42.J2	FJB	564037	female
A31.J2	Dash	562842	male	AE42.J3	FJB	564004	male
A31.J3	Dash	562464	male	AE43.J1	FJB	563679	male
A31.J4	Dash	562465	male	AE43.J2	FJB	564037	male
A31.J5	Dash	563071	male	AE43.J3	FJB	565957	male
A34.J	EngineCmpt.	568118	male	AE44.J1	FJB	563679	male
A34.K	EngineCmpt.	564270	male	AE44.J2	FJB	564037	female
A34.L	EngineCmpt.	564269	male	AE44.J3	FJB	565957	male
A36.JA	FJB	562767	male	AE45.J1	FJB	563679	male
A36.JB	FJB	562765	male	AE45.J2	FJB	564037	female
A36.JC	FJB	562957	male	AE45.J3	FJB	565957	male
A40.A	EngineCmpt.	561668	male	AE46.J1	FJB	563679	male
A77	Parcelrack	564547	male	AE46.J2	FJB	564037	female
A78	Parcelrack	562583	female	AE46.J3	FJB	565957	male
A79	Parcelrack	562583	female	AE47.J1	RHConsole	563679	male
A80	Parcelrack	562479	female	AE47.J2	RHConsole	564037	female
A81.JA	FJB	562767	male	AE47.J3	RHConsole	565957	male
A81.JB	FJB	562765	male	AE48.J1	RHConsole	563679	male

CONNECTORS LIST

No	Location	Part #	Gender	No	Location	Part #	Gender
AE48.J2	RHConsole	564037	female	B96B	Engine_Cmpt	563823	male
AE48.J3	RHConsole	565957	male	B97	Engine_Cmpt	563816	male
AE49.J1	RJB	563679	male	B98	Engine_Cmpt	563817	male
AE49.J2	RJB	564037	male	B115A	EngineCmpt.	564226	male
AE49.J3	RJB	565957	male	B142C	CondensorCmpt.	563793	male
AE50.J1	RJB	563679	male	B310	EngineCmpt.	565967	male
AE50.J2	RJB	564037	male	C1	FJB	563589	male
AE50.J3	RJB	565957	male	C1	FJB	563590	female
AE51.J1	RJB	563679	male	C1S	FJB	563589	male
AE51.J2	RJB	564037	female	C1S	FJB	563590	female
AE51.J3	RJB	565957	male	C2	Service_Cmpt	563580	male
AE52.J1	RJB	563679	male	C2	Service_Cmpt	563581	female
AE52.J2	RJB	564037	female	C2A	FJB	563580	male
AE52.J3	RJB	565957	male	C2A	FJB	563581	female
AE54.J1	EvaporatorCmpt.	563679	male	C2B	FJB	564034	male
AE54.J2	EvaporatorCmpt.	564037	female	C2B	FJB	564035	female
AE54.J3	EvaporatorCmpt.	565957	male	C3_plug	RJB	563589	male
AE55.J1	Dash	563679	male	C3_socket	RJB	563590	female
AE55.J2	Dash	564037	female	C3S	RJB	563593	male
AE55.J3	Dash	564004	male	C3S	RJB	563590	female
AE56.J1	Dash	563679	male	C4	FJB	563580	male
AE56.J2	Dash	564037	male	C4	FJB	563581	female
AE56.J3	Dash	564004	male	C5	FJB	563589	male
AE57.J1	3rd_RH_Lugg_Cmpt	563679	male	C5	FJB	563590	female
AE57.J2	3rd_RH_Lugg_Cmpt	564037	male	C5S	FJB	563589	male
AE57.J3	3rd_RH_Lugg_Cmpt	564004	male	C5S	FJB	563590	female
AE58.J1	SlideoutPanel	563679	male	C6	FJB	563582	male
AE58.J2	SlideoutPanel	564037	male	C6	FJB	563583	female
AE58.J3	SlideoutPanel	565957	male	C7	Service_Cmpt	562566	male
AE59.J1	SlideoutPanel	563679	male	C7	Service_Cmpt	562565	female
AE59.J2	SlideoutPanel	564037	male	C8	FJB	563227	male
AE59.J3	SlideoutPanel	565957	male	C8	FJB	563614	female
AltLL.A	EngineCmpt.	563746	female	C9	RJB	561986	male
AltLL.B	EngineCmpt.	560815	female	C9	RJB	561987	female
AltLL.C	EngineCmpt.	564469	female	C10	Engine_Cmpt	562477	male
AltUL.A	EngineCmpt.	563746	female	C10	Engine_Cmpt	562479	female
AltUL.B	EngineCmpt.	560815	female	C11	Service_Cmpt	563580	male
AltUL.C	EngineCmpt.	564469	female	C11	Service_Cmpt	563581	female
AltUR.A	EngineCmpt.	563746	female	C12	Engine_Cmpt	562581	male
AltUR.B	EngineCmpt.	560815	female	C12	Engine_Cmpt	562583	female
AltUR.C	EngineCmpt.	564469	female	C13_plug	RH_Console	563589	male
B85	Engine_Cmpt	563815	male	C13_socket	RH_Console	563590	female
B96	Engine_Cmpt	563821	male	C13S	RH_Console	563589	male

CONNECTORS LIST

No	Location	Part #	Gender	No	Location	Part #	Gender
C13S	RH_Console	563590	female	C50	RJB	563226	male
C14	FrontVehicle	562581	male	C50	RJB	563613	female
C14	FrontVehicle	562583	female	C52	EvaporatorCmpt.	563618	male
C15A	Evap_Cmpt	568110	male	C52	EvaporatorCmpt.	563616	female
C15A	Evap_Cmpt	568109	female	C54	EngineCmpt.	563226	male
C17	RJB	560195	male	C54	EngineCmpt.	563613	female
C17	RJB	560169	female	C54A	EngineCmpt.	568110	male
C18	FJB	561986	male	C54A	EngineCmpt.	568109	female
C18	FJB	561987	female	C54B	EngineCmpt.	563589	male
C19	RJB	561986	male	C54B	EngineCmpt.	563590	female
C19	RJB	561987	female	C58	CondensorCmpt.	564567	male
C23	Evap_Cmpt	564034	male	C58	CondensorCmpt.	564568	female
C23	Evap_Cmpt	564035	female	C58A	CondensorCmpt.	564258	male
C24_plug	Evap_Cmpt	561690	male	C58A	CondensorCmpt.	566037	female
C24_socket	Evap_Cmpt	561566	female	C59	3rdLuggCmpt.	561643	male
C26	UreaCmpt.	563226	male	C59	3rdLuggCmpt.	561642	female
C26	UreaCmpt.	563613	female	C61	Fr_Service_Door	561669	male
C26A	UreaCmpt.	568110	male	C61	Fr_Service_Door	561670	female
C26A	UreaCmpt.	568109	female	C62	Fr_Service_Door	562566	male
C26B	UreaCmpt.	563227	male	C62	Fr_Service_Door	562565	female
C26B	UreaCmpt.	563614	female	C64	EngineCmpt.	568110	male
C29	WCL_System	563651	male	C64	EngineCmpt.	568109	female
C29	WCL_System	563652	female	C71	FJB	561646	male
C30	WCL_System	561710	male	C71	FJB	561645	female
C30	WCL_System	561709	female	C72	FJB	561646	male
C32W	3rd_RH_Lugg_Cmpt	561640	male	C72	FJB	561645	female
C32W	3rd_RH_Lugg_Cmpt	561639	female	C74	FJB	561645	female
C33	3rd_RH_Lugg_Cmpt	564034	male	C74	FJB	561646	male
C33	3rd_RH_Lugg_Cmpt	564035	female	C80	EvaporatorCmpt.	562477	male
C34	RH_Console	561986	male	C80	EvaporatorCmpt.	562479	female
C34	RH_Console	561987	female	C81	1st_Lugg_Cmpt	562477	male
C39A	EngineCmpt.	561782	male	C81	1st_Lugg_Cmpt	562479	female
C39A	EngineCmpt.	561781	female	C82	1st_Lugg_Cmpt	562477	male
C40	Dash	562485	male	C82	1st_Lugg_Cmpt	562479	female
C40	Dash	562486	female	C83	2nd_Lugg_Cmpt	562477	male
C44_plug	FJB	561577	male	C83	2nd_Lugg_Cmpt	562479	female
C44_socket	FJB	561605	female	C84	2nd_Lugg_Cmpt	562477	male
C45	FJB	561643	male	C84	2nd_Lugg_Cmpt	562479	female
C45	FJB	561642	female	C85	4rd_Lugg_Cmpt	562477	male
C46	WCL_System	562549	male	C85	2nd_Lugg_Cmpt	562479	female
C46	WCL_System	562550	female	C86	4rd_Lugg_Cmpt	563618	male
C49	FJB	562005	male	C86	4rd_Lugg_Cmpt	563616	female
C49	FJB	561714	female	C87	EngineCmpt.	562485	male

CONNECTORS LIST

No	Location	Part #	Gender	No	Location	Part #	Gender
C87	EngineCmpt.	562486	female	C133_plug	Dash	561986	male
C88	3rd_RH_Lugg_Cmpt	563618	male	C133_socket	Dash	561987	female
C88	3rd_RH_Lugg_Cmpt	563616	female	C133A	Dash	561986	male
C89	CondensorCmpt.	562477	male	C133A	Dash	561987	female
C89	CondensorCmpt.	562479	female	C152	Cond_Cmpt	561611	male
C91	RJB	562285	male	C152	Cond_Cmpt	561610	female
C91	RJB	562282	female	C158	CondensorCmpt.	562477	male
C92A	EngineCmpt.	563226	male	C158	CondensorCmpt.	562479	female
C92A	EngineCmpt.	563613	female	C159	CondensorCmpt.	566033	male
C92C	EngineCmpt.	562581	male	C159	CondensorCmpt.	566034	female
C92C	EngineCmpt.	562583	female	C170	LH_Console	561637	male
C94_plug	FJB	563589	male	C170	LH_Console	561636	female
C94_socket	FJB	563590	female	C171	LH_Console	561646	male
C96	FJB	561643	male	C171	LH_Console	561645	female
C96	FJB	561642	female	C172	LHConsole	561637	male
C97	FJB	561643	male	C172	LHConsole	561635	female
C97	FJB	561642	female	C193_plug	RJB	563589	male
C100	EvaporatorCmpt.	562477	male	C193_socket	RJB	563590	female
C100	EvaporatorCmpt.	562479	female	C194	FJB	563589	male
C100S	EvaporatorCmpt.	562477	male	C194	FJB	563590	female
C100S	EvaporatorCmpt.	562479	female	C195	Dash	563347	male
C101	Service_Cmpt	561690	male	C195	Dash	560489	female
C101	Service_Cmpt	561566	female	C222	FJB	562477	male
C102A	ServiceCmpt.	563226	male	C222	FJB	562479	female
C102A	ServiceCmpt.	563613	female	C223	FJB	563227	male
C105_plug	FJB	562581	male	C223	FJB	563614	female
C105_socket	FJB	562583	female	C224	FJB	561637	male
C106_plug	FJB	562581	male	C224	FJB	561636	female
C106_socket	FJB	562583	female	C225	FJB	562650	male
C110	Dash	568110	male	C225	FJB	562649	female
C110	Dash	568109	female	C226	FJB	562650	male
C114	3rd_RH_Lugg_Cmpt	561550	male	C226	FJB	562649	female
C114	3rd_RH_Lugg_Cmpt	561667	female	C228	EngineCmpt.	562477	male
C119A	EngineDoor	568110	male	C228	EngineCmpt.	562479	female
C119A	EngineDoor	568109	female	C242	ServiceCmpt.	562789	male
C121	EngineDoor	562566	male	C242	ServiceCmpt.	565131	female
C121	EngineDoor	562565	female	C243	ServiceCmpt.	563347	male
C122	EngineDoor	562566	male	C243	ServiceCmpt.	563180	female
C122	EngineDoor	562565	female	C266	EntraceDoor	561640	male
C131A	EngineCmpt.	561782	male	C266	EntraceDoor	561639	female
C131A	EngineCmpt.	561781	female	C279	Service_Cmpt	562477	male
C131B	EngineCmpt.	561782	male	C279	Service_Cmpt	562479	female
C131B	EngineCmpt.	561781	female	C290	Rear_Vehicle	562477	male

CONNECTORS LIST

No	Location	Part #	Gender	No	Location	Part #	Gender
C290	Rear_Vehicle	562479	female	C607B_plug	FJB	561577	male
C304	2ndLuggCmpt.	560852	male	C607B_socket	FJB	561605	female
C304	2ndLuggCmpt.	560851	female	C617	Mirror_LH	563801	male
C305	2ndLuggCmpt.	560852	male	C617	Mirror_LH	563800	female
C305	2ndLuggCmpt.	560851	female	C618	Mirror_RH	563801	male
C380A	Dash	564222	male	C618	Mirror_RH	563800	female
C380A	Dash	564224	female	C_ALT	EngineCmpt.	562581	male
C397	RJB	562285	male	C_ALT	EngineCmpt.	562583	female
C397	RJB	562282	female	C_ALT3	EngineCmpt.	562477	male
C463	EngineCmpt.	568111	male	C_ALT3	EngineCmpt.	562479	female
C463	EngineCmpt.	568112	female	C_Mo9	Evap_Cmpt	561577	male
C464A	RJB	564222	male	C_Mo9	Evap_Cmpt	561605	female
C464A	RJB	564224	female	C_Se51	Driverseat	563589	male
C551	3rdLuggCmpt.	561476	male	C_Se51	Driverseat	563590	female
C551	3rdLuggCmpt.	561477	female	CCust	RJB	562477	male
C553	2ndLuggCmpt.	561476	male	CCust	RJB	562479	female
C553	2ndLuggCmpt.	561477	female	CF167	RH_Console	562350	male
C554	1stLuggCmpt.	561476	male	CF167	RH_Console	563764	female
C554	1stLuggCmpt.	561477	female	CInt1	FJB	563227	male
C555	1stLuggCmpt.	561476	male	CInt1	FJB	563614	female
C555	1stLuggCmpt.	561477	female	CInt2	FJB	563226	male
C556	3rdLuggCmpt.	561476	male	CInt2	FJB	563613	female
C556	3rdLuggCmpt.	561477	female	CSo1	SlideOutPanel	562581	male
C557	2ndLugg.Cmpt.	561476	male	CSo1	SlideOutPanel	562583	female
C557	2ndLuggCmpt.	561477	female	CSo2	SlideOutPanel	561643	male
C559	3rdLuggCmpt.	561476	male	CSo2	SlideOutPanel	561641	female
C559	3rdLuggCmpt.	561477	female	CSo5	SlideOutPanel	561847	male
C560	3rdLuggCmpt.	561476	male	CSo5	SlideOutPanel	561862	female
C560	3rdLuggCmpt.	561477	female	CSo7	SlideOutPanel	562581	male
C561	3rdLuggCmpt.	561476	male	CSo7	SlideOutPanel	562583	female
C561	3rdLuggCmpt.	561477	female	CT_In	Rear_Vehicle	563582	male
C562	3rdLuggCmpt.	561476	male	CT_In	Rear_Vehicle	563583	female
C562	3rdLuggCmpt.	561477	female	CT_Out	Rear_Vehicle	560478	female
C606_plug	FJB	561690	male	EI	EngineCmpt.	563739	male
C606_socket	FJB	561566	female	L1A	EngineCmpt.	562848	male
C606A	FJB	561577	male	L10	Dash	561247	male
C606A	FJB	561605	female	L16.A	FrontRoof	562615	female
C606B	FJB	561577	male	L16.B	FrontRoof	562615	female
C606B	FJB	561605	female	L17.A	FrontRoof	562615	female
C607_plug	FJB	561577	male	L17.B	FrontRoof	562615	female
C607_socket	FJB	561605	female	L18.A	EntraceDoor	561626	female
C607A_plug	FJB	561577	male	L18.B	EntraceDoor	561626	female
C607A_socket	FJB	561605	female	L21	FrontRoof	562486	female

CONNECTORS LIST

No	Location	Part #	Gender	No	Location	Part #	Gender
L22	FrontRoof	562486	female	L91A	RearVehiculeLH	562601	male
L23	FrontRoof	562486	female	L92A	RearVehicleRH	562601	male
L24	FrontRoof	562486	female	L93.A	RearOutsideLH	563069	female
L25	FrontRoof	562486	female	L93.B	RearOutsideLH	563069	female
L26	FrontRoof	562486	female	L94.A	RearOutsideRH	563069	female
L27	FrontRoof	562486	female	L94.B	RearOutsideRH	563069	female
L59	OutsidefrontRH	562623	male	L95	Outside_Front_LH	562902	female
L59A	OutsideFrontRH	563366	male	L96	Outside_Front_RH	562902	female
L59B	OutsideFrontRH	562623	male	L97.A	Outside_Front_LH	563069	female
L60	OutsideFrontLH	562623	male	L97.B	Outside_Front_LH	563069	female
L60A	OutsideFrontLH	563366	male	L98.A	EntranceDoor	563069	female
L60B	OutsideFrontLH	562623	male	L98.B	EntraceDoor	563069	female
L61	OutsideFrontRH	562601	male	L120	DriverSeat	562237	female
L62	OutsideFrontLH	562601	male	L173	EngineCmpt.	563590	female
L63	FrontSideRH	562155	male	L174A	EngineCmpt.	563590	female
L64	OutsideFrontRH	562155	male	L176	3rd_Lugg_Cmpt	561247	male
L65	FrontSideLH	562155	male	L177	3rd_Lugg_Cmpt	561247	male
L66	OutsideFrontLH	562155	male	L178	4thLuggCmpt.	561247	male
L67	3rdLuggCmpt.	562155	male	L179	4thLuggCmpt.	561247	male
L68	3rdLuggCmpt.	562155	male	L180	2nd_Lugg_Cmpt	561247	male
L69	EvapCmpt.	562155	male	L181	2nd_Lugg_Cmpt	561247	male
L70	EvapCmpt.	562155	male	L182	1st_Lugg_Cmpt	561247	male
L71A	RearVehicleLH	562601	male	L183	1st_Lugg_Cmpt	561247	male
L72	Rear_VehicleLH	562155	male	L184	ServiceCmpt.	561247	male
L73A	RearVehicleRH	562601	male	L185.A	Dash	561539	male
L74	RearVehicleRH	562155	male	L185.B	Dash	561539	male
L75	RearVehicleLH	562155	male	L186.A	Dash	561539	male
L76	RearVehicleRH	562155	male	L186.B	Dash	561539	male
L77A	RearVehicleRH	562601	male	L187	Engine_Cmpt	561690	male
L78A	RearVehicleRH	562601	male	L193.A	Dash	560488	female
L79A	RearVehicleLH	562601	male	L193.B	Dash	560488	female
L80A	RearVehicleLH	562601	male	L194.A	Dash	562019	female
L81.A	DPFDoor	562835	female	L194.B	Dash	560488	female
L81.B	DFPDoor	562834	male	L195.A	Dash	560488	female
L82A	EngineDoor	562348	female	L195.B	Dash	560488	female
L83A	EngineDoor	562348	female	L199	EngineCmpt.	562848	male
L84	RearRoof	562486	female	L203	RH_Console	561690	male
L85	RearRoof	562486	female	L204	WCL_Upper_Door	562803	male
L86	RearRoof	562486	female	L205	EvapCmpt.	562485	male
L87	RearRoof	562486	female	L206	WCL_Upper_Door	562803	male
L88	RearRoof	562486	female	L207.A	WCL_System	561699	female
L89	RearRoof	562486	female	L207.B	WCL_System	561701	female
L90	RearRoof	562486	female	L207.C	WCL_System	561701	female

CONNECTORS LIST

No	Location	Part #	Gender	No	Location	Part #	Gender
L207.D	WCL_System	561699	female	Mo35	3rdLuggCmpt.RH	564161	male
L207.E	WCL_System	561701	female	Mo36	CompressorDoor	564161	male
L207.F	WCL_System	561699	female	Mo37	4thLuggCmpt.RH	564161	male
L207.G	WCL_System	561699	female	Mo38	4thLuggCmpt.LH	564161	male
L207.H	WCL_System	560926	female	Mo40	1stLuggCmpt.LH	561477	female
L207.I	WCL_System	560926	female	Mo41	2ndLuggCmpt.LH	561477	female
L282	Preheater_Cmpt	561690	male	Mo42	3rdLuggCmpt.LH	561477	female
L285.A	Rear_Vehicle	562835	female	Mo43	3rdLuggCmpt.LH	561477	female
L285.B	Rear_Vehicle	562834	male	Mo50	FrontAxleCmpt.	561690	male
L286.A	Rear_Vehicle	562835	female	Mo54	Service_Cmpt	562474	male
L286.B	Rear_Vehicle	562834	male	Mo55	EntraceDoor	563626	male
L298A	EngineCmpt.	563590	female	Mo65	EngineCmpt.	568089	male
L304	OutsideLuggDoorLH	562155	male	Mo67	EngineCmpt.	568089	male
L305	OutsideLuggDoorRH	562155	male	Mo68	EngineCmpt.	568089	male
L306	Radiator_Door	562155	male	Mo69	EngineCmpt.	568089	male
L307	Radiator_Door	562155	male	Mo70	EngineCmpt.	568089	male
L309	RJB	561247	male	Mo71	EngineCmpt.	568089	male
L350A.A	RearAxleCmpt.	564552	male	Mo72	EngineCmpt.	568089	male
L350A.B	RearAxleCmpt.	563340	male	Mo73	EngineCmpt.	568089	male
L350A.C	RearAxleCmpt.	562251	male	MoSO1	FrontSlideOut	561967	male
Mo3	Dash	561667	female	MoSO2	RearSlideOut	561967	male
Mo4	Dash	562076	male	PC1	CantrackCable	562650	male
Mo7	Cond_Cmpt	563691	male	PC1	CantrackCable	562649	female
Mo8	Cond_Cmpt	563691	male	Pot1.A	Dash	560488	female
Mo11	CondensorCmpt.	568089	male	Pot1.B	Dash	560488	female
Mo12	Engine_Cmpt	561690	male	Pot1.C	Dash	560488	female
Mo15	Front_Ceiling	560900	female	R3	RJB	563409	male
Mo16	Front_Ceiling	560900	female	R6	Dash	564496	male
Mo17	RH_Console	563626	male	R7	Dash	564496	male
Mo19	Fr_Service_Door	562474	male	R12	Evap_Cmpt	563409	male
Mo20	Fr_Service_Door	562474	male	R21	FJB	560525	male
Mo22	RH_Console	561186	male	R27	Dash	564496	male
Mo24	RH_Console	562348	female	R29	RJB	563409	male
Mo25	RH_Console	562348	female	R30	FJB	564496	male
Mo26	EntraceDoor	564161	male	R31	FJB	564496	male
Mo27	Cond_Cmpt	563691	male	R36	Dash	564496	male
Mo28	Cond_Cmpt	563691	male	R37	Dash	564496	male
Mo29	RJB	563590	female	R38	FJB	564496	male
Mo30	1stLuggCmpt.LH	564161	male	R47	WCL_System	564496	male
Mo31	1stLuggCmpt.RH	564161	male	Res3	RJB	563590	female
Mo32	2ndLuggCmpt.LH	564161	male	Res4	FJB	563590	female
Mo33	2ndLuggCmpt.RH	564161	male	Res6	FJB	563590	female
Mo34	3rdLuggCmpt.LH	564161	male	Res7	Dashboard	563590	female

CONNECTORS LIST

No	Location	Part #	Gender	No	Location	Part #	Gender
Res15	Engine_Cmpt	561782	male	Se36	Rear_Axle_Cmpt	562427	male
Res19	FJB	563590	female	Se37	Front_Axle_LH	641132	female
Res20	FJB	563590	female	Se38	Front_Axle_RH	641132	female
Res31	UreaCmpt.	562350	male	Se39	Rear_Axle_LH	641132	female
Res32	UreaCmpt.	563764	female	Se40	Rear_Axle_LH	641132	female
Res53.A	CondensorCmpt.	563590	female	Se45	ServiceCmpt.	563409	male
Res99	Dash	563590	female	Se46	RearAxleCmpt.	562348	female
RSO1_1	SlideOutPanel	564496	male	Se49	EngineCmpt.	561690	male
RSO1_2	SlideOutPanel	564496	male	Se51	Driverseat	563589	male
RSO2_1	SlideOutPanel	564496	male	Se53	Service_Cmpt	563159	female
RSO2_2	SlideOutPanel	564496	male	Se54	Service_Cmpt	563159	female
Se2	ServiceCmpt.	561566	female	Se55	Service_Cmpt	563159	female
Se11.A	Cond_Cmpt	560082	female	Se56	WCL	562884	female
Se11.B	Cond_Cmpt	560082	female	Se60	Service_Cmpt	563409	male
Se11.C	Cond_Cmpt	560082	female	Se62	WCL	561690	male
Se13	Engine_Cmpt	562350	male	Se63	RearAxleCmpt.	641132	female
Se14.A	Driver_Area	561782	male	Se64	RearAxleCmpt.	641132	female
Se14.B	Driver_Area	561781	female	Se65	Dash	564042	female
Se15.A	EntraceDoor	560488	female	Se66	FrontAxleCmpt.	564039	female
Se15.B	EntraceDoor	560488	female	Se67	ServiceCmpt.	563159	female
Se15.C	EntraceDoor	560488	female	Se69	ServiceCmpt.	563159	female
Se16.A	EntraceDoor	562651	female	Se89	EngineCmpt.	562350	male
Se16.B	EntraceDoor	562651	female	Se94	WCL	562877	female
Se17.A	EntraceDoor	562291	female	Se100	WCL_Upper_Door	562479	female
Se17.B	EntraceDoor	562291	female	SESO1	SlideOutPanel	563159	female
Se17.C	EntraceDoor	562291	female	SeSO2	SlideOutFRLH	562479	female
Se18	ServiceCmpt.	561566	female	SeSO3	SlideOutFRLH	562479	female
Se19_P	Service_Cmpt	563677	male	SeSO5	SlideOutRrLH	562479	female
Se19_S	Service_Cmpt	563677	male	SeSO6	SlideOutRrLH	562479	female
Se20	Evap_Cmpt	562426	male	shell1_1617	Driver_Area	562471	male
Se21	Dash	561248	female	So3	RHConsole	641385	male
Se23	EngineCmpt.	563159	female	So7	Service_Cmpt	561566	female
Se23A	EngineCmpt.	563159	female	So8	ServiceCmpt.	641385	male
Se24	EngineCmpt.	563758	female	So9	EngineCmpt.	560016	female
Se24A	EngineCmpt.	563758	female	So11	Cond_Cmpt	561566	female
Se25	EvapCmpt.	561248	female	So13	Evap_Cmpt	563204	female
Se29	Engine_Cmpt	561566	female	So17	Service_Cmpt	562848	male
Se30	EngineCmpt.	562877	female	So21	Front_Axle_Cmpt	564046	female
Se31	EngineCmpt.	562877	female	So22	Front_Axle_Cmpt	564046	female
Se32	Rear_Axle_Cmpt	562426	male	So23	Rear_Axle_Cmpt	564046	female
Se33	Rear_Axle_Cmpt	562856	male	So24	Rear_Axle_Cmpt	564046	female
Se34	Rear_Axle_Cmpt	562426	male	So27	RearAxleCmpt.	564045	female
Se35	Rear_Axle_Cmpt	562426	male	So28	ServiceCmpt.	641385	male

CONNECTORS LIST

No	Location	Part #	Gender	No	Location	Part #	Gender
So29	ServiceCmpt.	641385	male	Sw45.A	3rd_Lugg_Cmpt	562403	female
So30	ServiceCmpt.	641385	male	Sw45.B	3rdLuggCmpt.	562403	female
So31	ServiceCmpt.	641385	male	Sw46.A	3rd_Lugg_Cmpt	562403	female
So32	ServiceCmpt.	641385	male	Sw46.B	3rdLuggCmpt.	562403	female
So36	EngineCmpt.	561690	male	Sw46A.A	3rd_RH_Lugg_Cmpt	562403	female
So50	RearAxleCmpt.	564046	female	Sw46A.B	3rd_RH_Lugg_Cmpt	562403	female
So52	FrontAxleCmpt.	564045	female	Sw47.A	4thLuggCmpt.	562403	female
spBar4	EngineCmpt.	564135	male	Sw47.B	4thLuggCmpt.	562403	female
spBar5	EngineCmpt.	564135	male	Sw48.A	4thLuggCmpt.	562403	female
spBar6	EngineCmpt.	564135	male	Sw48.B	4thLuggCmpt.	562403	female
spBar7	CondCmpt.	564135	male	Sw49.A	2nd_Lugg_Cmpt	562403	female
spBar11	EngineCmpt.	564135	male	Sw49.B	2ndLuggCmpt.	562403	female
spBar12	EngineCmpt.	564135	male	Sw50.A	2nd_Lugg_Cmpt	562403	female
spBar13	EngineCmpt.	564135	male	Sw51.A	1st_Lugg_Cmpt	562403	female
spBar14	EngineCmpt.	564135	male	Sw52.A	1st_Lugg_Cmpt	562403	female
spBar15	EngineCmpt.	564135	male	Sw58.A	EngineCmpt.	563135	male
spBar16	EngineCmpt.	564135	male	Sw59	EngineCmpt.	563135	male
spBar19	CondCmpt.	564135	male	Sw63A	LHConsole	562763	male
spBar20	CondCmpt.	564135	male	Sw64.A	ServiceCmpt.	560815	female
spBar21	CondCmpt.	564135	male	Sw64.B	Ssp	560815	female
spBar22	EngineCmpt.	564135	male	Sw82	RJB	563135	male
spBar23	EngineCmpt.	564135	male	Sw83.A	Dash	560082	female
spBar24	EngineCmpt.	564135	male	Sw83.B	Dash	560815	female
Sw1.C258	Driver_Area	561188	female	Sw83.C	Dash	560082	female
Sw1.C259	Driver_Area	561186	male	Sw83.D	Dash	560815	female
Sw2	Dash	562763	male	Sw85	LH_Console	562749	male
Sw3	Dash	562763	male	Sw99	Dash	562763	male
Sw4	Dash	562763	male	Sw102	Dash	562763	male
Sw6	Dash	562763	male	Sw103A	LHConsole	562763	male
Sw14	Dash	562763	male	Sw104	Dash	562763	male
Sw16	Dash	562763	male	Sw107.A	LHConsole	561457	female
Sw17	Dash	562763	male	Sw107.B	LHConsole	561457	female
Sw18A	LH_Console	562763	male	Sw107.C	LHConsole	561457	female
Sw20	Dashboard	562763	male	Sw107.D	LHConsole	561457	female
Sw24	Dash	562763	male	Sw107.E	LHConsole	561457	female
Sw24A		562763	male	Sw107.F	LHConsole	561457	female
Sw34	Dash	562763	male	Sw107.G	LHConsole	561457	female
Sw35	LHConsole	562763	male	Sw107.H	LHConsole	561457	female
Sw38	LH_Console	562763	male	Sw107.J	LHConsole	561457	female
Sw40	LH_Console	561690	male	Sw107.K	LHConsole	561457	female
Sw41	LH_Console	562749	male	Sw108	LHConsole	562763	male
Sw42	WCL_System	561636	female	Sw109.A	1st_Lugg_LH	560079	female
Sw44.A	ServiceCmpt.	562403	female	Sw109.B	1st_Lugg_LH	560079	female

CONNECTORS LIST

No	Location	Part #	Gender	No	Location	Part #	Gender
Sw110.A	1st_Lugg_RH	560079	female	Y81	Cond_Cmpt	563793	male
Sw110.B	1st_Lugg_RH	560079	female				
Sw111.A	2ndLuggCmpt.	560079	female				
Sw111.B	2ndLuggCmpt.	560079	female				
Sw112.A	2ndLuggCmpt.	560079	female				
Sw112.B	2ndLuggCmpt.	560079	female				
Sw113.A	2ndLuggCmpt.	560079	female				
Sw113.B	2ndLuggCmpt.	560079	female				
Sw114.A	3rd_Lugg_RH	560079	female				
Sw114.B	3rd_Lugg_RH	560079	female				
Sw115.A	Compr_Door	560079	female				
Sw115.B	Compr_Door	560079	female				
Sw122	ServiceCmpt.	562763	male				
Sw137	Dash	562763	male				
Sw156	LH_Console	562763	male				
Sw157	Dash	562763	male				
Sw158	Dash	562763	male				
Sw165A		562763	male				
Sw166	RHConsole	562763	male				
SwSo1	FrontSlideOut	561552	female				
SwSo2	RearSlideOut	561552	female				
Term106	RJB	{part_no564189}	N/A				
Term107	RJB	{part_no564189}	N/A				
VECF1	FJB	563186	male				
VECF2	FJB	563183	male				
VECF3	FJB	563185	male				
VECF4	FJB	563182	male				
VECF9	FJB	563448	male				
VECF10	FJB	563181	male				
VECF11	FJB	563184	male				
VECF12	FJB	563187	male				
VECR1	RJB	563186	male				
VECR2	RJB	563183	male				
VECR3	RJB	563185	male				
VECR4	RJB	563182	male				
VECR9	RJB	563448	male				
VECR10	RJB	563181	male				
VECR11	RJB	563184	male				
VECR12	RJB	563187	male				
VECT2	Rear_Vehicle	563716	male				
VECT3	RearVehicle	563718	male				
VECT4	RearVehicle	563714	male				
Y80	Engine_Cmpt	563789	male				

CONNECTORS LIST

No	Location	Part #	Gender	No	Location	Part #	Gender
A1	RJB	563975	male	A81.JC	FJB	562957	male
A2	FJB	563984	male	A83	Parcelrack	565970	female
A3	Dash	562363	male	A96S	FJB	564073	female
A4.A	Service_Cmpt	562428	female	A97	Dash	563226	male
A4.B	Service_Cmpt	561188	female	A97A	Dash	563226	male
A5	Service_Cmpt	562428	female	A97A	Dash	563613	female
A6	Engine_Cmpt	562427	male	A97B	Dash	563226	male
A7	Rear_Axle_Cmpt	563979	male	A97B	Dash	563613	female
A9.Cx1	FJB	564041	female	A99	FJB	564205	male
A9.Cx2	FJB	563678	male	A100S	Front_Axle_Cmpt	563758	female
A9.Cx3	FJB	564037	female	A101S	Rear_RH_Axle_Cmpt	563758	female
A9.Cx4	FJB	564038	female	A100S	Front_Axle_Cmpt	563758	female
A14.A	Dash	562766	male	A102S	Rear_RH_Axle_Cmpt	563758	female
A14.B	Dash	562767	male	A103	Dash	562070	female
A14.C	Dash	562765	male	A106	FrontVehicle	565974	male
A15	Dash	562464	male	A114A	Dash	564252	male
A18.J1	FJB	562794	male	A130	Driver_Area	563226	male
A18.J2	FJB	562650	male	A131.A	Engine_Cmpt	561782	male
A24.A	RH_Console	561890	male	A131.B	Engine_Cmpt	561781	female
A24.B	RH_Console	561566	female	A137A	CondensorCmpt.	20429843	male
A24.C	RH_Console	561889	female	A138	Cond_Cmpt	563787	male
A27	Service_Cmpt	562929	male	A139	Dash	564501	male
A28	Service_Cmpt	562928	male	AE41.J1	FJB	563679	male
A30.A	Dash	561611	male	AE41.J2	FJB	564037	female
A30.C	Dash	561889	female	AE41.J3	FJB	564004	male
A31.J1	Dash	562780	male	AE42.J1	FJB	563679	male
A31.J2	Dash	562842	male	AE42.J2	FJB	564037	female
A31.J3	Dash	562464	male	AE42.J3	FJB	564004	male
A31.J4	Dash	562465	male	AE43.J1	FJB	563679	male
A31.J5	Dash	563071	male	AE43.J2	FJB	564037	male
A34.J	EngineCmpt.	568118	male	AE43.J3	FJB	565957	male
A34.K	EngineCmpt.	564270	male	AE44.J1	FJB	563679	male
A34.L	EngineCmpt.	564269	male	AE44.J2	FJB	564037	female
A36.JA	FJB	562767	male	AE44.J3	FJB	565957	male
A36.JB	FJB	562765	male	AE45.J1	FJB	563679	male
A36.JC	FJB	562957	male	AE45.J2	FJB	564037	female
A40.A	EngineCmpt.	561668	male	AE45.J3	FJB	565957	male
A77	Parcelrack	564547	male	AE46.J1	FJB	563679	male
A78	Parcelrack	562583	female	AE46.J2	FJB	564037	female
A79	Parcelrack	562583	female	AE46.J3	FJB	565957	male
A80	Parcelrack	562479	female	AE47.J1	RHConsole	563679	male
A81.JA	FJB	562767	male	AE47.J2	RHConsole	564037	female
A81.JB	FJB	562765	male	AE47.J3	RHConsole	565957	male

CONNECTORS LIST

No	Location	Part #	Gender	No	Location	Part #	Gender
AE48.J1	RHConsole	563679	male	B96	EngineCmpt.	563821	male
AE48.J2	RHConsole	564037	female	B96B	EngineCmpt.	563823	male
AE48.J3	RHConsole	565957	male	B97	EngineCmpt.	563816	male
AE49.J1	RJB	563679	male	B98	EngineCmpt.	563817	male
AE49.J2	RJB	564037	male	B99	EngineCmpt.	563815	male
AE49.J3	RJB	565957	male	B115A	EngineCmpt.	564226	male
AE50.J1	RJB	563679	male	B142C	CondensorCmpt.	563793	male
AE50.J2	RJB	564037	male	B310	EngineCmpt.	565967	male
AE50.J3	RJB	565957	male	C1	FJB	563589	male
AE51.J1	RJB	563679	male	C1	FJB	563590	female
AE51.J2	RJB	564037	female	C1S	FJB	563589	male
AE51.J3	RJB	565957	male	C1S	FJB	563590	female
AE52.J1	RJB	563679	male	C2	Service_Cmpt	563580	male
AE52.J2	RJB	564037	female	C2	Service_Cmpt	563581	female
AE52.J3	RJB	565957	male	C2A	FJB	563580	male
AE54.J1	EvaporatorCmpt.	563679	male	C2A	FJB	563581	female
AE54.J2	EvaporatorCmpt.	564037	female	C2B	FJB	564034	male
AE54.J3	EvaporatorCmpt.	565957	male	C2B	FJB	564035	female
AE55.J1	Dash	563679	male	C3_plug	RJB	563589	male
AE55.J2	Dash	564037	female	C3_socket	RJB	563590	female
AE55.J3	Dash	564004	male	C3S	RJB	563593	male
AE56.J1	Dash	563679	male	C3S	RJB	563590	female
AE56.J2	Dash	564037	male	C4	FJB	563580	male
AE56.J3	Dash	564004	male	C4	FJB	563581	female
AE57.J1	3rd_RH_Lugg_Cmpt	563679	male	C5	FJB	563589	male
AE57.J2	3rd_RH_Lugg_Cmpt	564037	male	C5	FJB	563590	female
AE57.J3	3rd_RH_Lugg_Cmpt	564004	male	C5S	FJB	563589	male
AE58.J1	SlideoutPanel	563679	male	C5S	FJB	563590	female
AE58.J2	SlideoutPanel	564037	male	C6	FJB	563582	male
AE58.J3	SlideoutPanel	565957	male	C6	FJB	563583	female
AE59.J1	SlideoutPanel	563679	male	C7	Service_Cmpt	562566	male
AE59.J2	SlideoutPanel	564037	male	C7	Service_Cmpt	562565	female
AE59.J3	SlideoutPanel	565957	male	C8	FJB	563227	male
AltLL.A	EngineCmpt.	563746	female	C8	FJB	563614	female
AltLL.B	EngineCmpt.	560815	female	C9	RJB	561986	male
AltLL.C	EngineCmpt.	564469	female	C9	RJB	561987	female
AltUL.A	EngineCmpt.	563746	female	C10	Engine_Cmpt	562477	male
AltUL.B	EngineCmpt.	560815	female	C10	Engine_Cmpt	562479	female
AltUL.C	EngineCmpt.	564469	female	C11	Service_Cmpt	563580	male
AltUR.A	EngineCmpt.	563746	female	C11	Service_Cmpt	563581	female
AltUR.B	EngineCmpt.	560815	female	C12	Engine_Cmpt	562581	male
AltUR.C	EngineCmpt.	564469	female	C12	Engine_Cmpt	562583	female
B85	EngineCmpt	563815	male	C13_plug	RH_Console	563589	male

CONNECTORS LIST

No	Location	Part #	Gender	No	Location	Part #	Gender
C13_socket	RH_Console	563590	female	C49	FJB	562005	male
C13S	RH_Console	563589	male	C49	FJB	561714	female
C13S	RH_Console	563590	female	C50	RJB	563226	male
C14	FrontVehicle	562581	male	C50	RJB	563613	female
C14	FrontVehicle	562583	female	C52	EvaporatorCmpt.	563618	male
C15A	EvaporatorCmpt.	568110	male	C52	EvaporatorCmpt.	563616	female
C15A	EvaporatorCmpt.	568109	female	C54	EngineCmpt.	563226	male
C17	RJB	560195	male	C54	EngineCmpt.	563613	female
C17	RJB	560169	female	C54A	EngineCmpt.	568110	male
C18	FJB	561986	male	C54A	EngineCmpt.	568109	female
C18	FJB	561987	female	C54B	EngineCmpt.	563589	male
C19	RJB	561986	male	C54B	EngineCmpt.	563590	female
C19	RJB	561987	female	C58	CondensorCmpt.	564567	male
C23	Evap_Cmpt	564034	male	C58	CondensorCmpt.	564568	female
C23	Evap_Cmpt	564035	female	C58A	CondensorCmpt.	564258	male
C24_plug	Evap_Cmpt	561690	male	C58A	CondensorCmpt.	566037	female
C24_socket	Evap_Cmpt	561566	female	C59	3rdLuggCmpt.	561643	male
C26	UreaCmpt.	563226	male	C59	3rdLuggCmpt.	561642	female
C26	UreaCmpt.	563613	female	C61	Fr_Service_Door	561669	male
C26A	UreaCmpt.	568110	male	C61	Fr_Service_Door	561670	female
C26A	UreaCmpt.	568109	female	C62	Fr_Service_Door	562566	male
C26B	UreaCmpt.	563227	male	C62	Fr_Service_Door	562565	female
C26B	UreaCmpt.	563614	female	C64	EngineCmpt.	568110	male
C29	WCL_System	563651	male	C64	EngineCmpt.	568109	female
C29	WCL_System	563652	female	C71	FJB	561646	male
C30	WCL_System	561710	male	C71	FJB	561645	female
C30	WCL_System	561709	female	C72	FJB	561646	male
C32W	3rd_RH_Lugg_Cmpt	561640	male	C72	FJB	561645	female
C32W	3rd_RH_Lugg_Cmpt	561639	female	C74	FJB	561645	female
C33	3rd_RH_Lugg_Cmpt	564034	male	C74	FJB	561646	male
C33	3rd_RH_Lugg_Cmpt	564035	female	C80	EvaporatorCmpt.	562477	male
C34	RH_Console	561986	male	C80	EvaporatorCmpt.	562479	female
C34	RH_Console	561987	female	C81	1st_Lugg_Cmpt	562477	male
C39A	EngineCmpt.	561782	male	C81	1st_Lugg_Cmpt	562479	female
C39A	EngineCmpt.	561781	female	C82	1st_Lugg_Cmpt	562477	male
C40	Dash	562485	male	C82	1st_Lugg_Cmpt	562479	female
C40	Dash	562486	female	C83	2nd_Lugg_Cmpt	562477	male
C44_plug	FJB	561577	male	C83	2nd_Lugg_Cmpt	562479	female
C44_socket	FJB	561605	female	C84	2nd_Lugg_Cmpt	562477	male
C45	FJB	561643	male	C84	2nd_Lugg_Cmpt	562479	female
C45	FJB	561642	female	C85	4rd_Lugg_Cmpt	562477	male
C46	WCL_System	562549	male	C85	4rd_Lugg_Cmpt	562479	female
C46	WCL_System	562550	female	C86	4rd_Lugg_Cmpt	563618	male

CONNECTORS LIST

No	Location	Part #	Gender	No	Location	Part #	Gender
C86	4rd_Lugg_Cmpt	563616	female	C131A	EngineCmpt.	561782	male
C87	EngineCmpt.	562485	male	C131A	EngineCmpt.	561781	female
C87	EngineCmpt.	562486	female	C131B	EngineCmpt.	561782	male
C88	3rd_RH_Lugg_Cmpt	563618	male	C131B	EngineCmpt.	561781	female
C88	3rd_RH_Lugg_Cmpt	563616	female	C133	Dash	561986	male
C89	CondensorCmpt.	562477	male	C133	Dash	561987	female
C89	CondensorCmpt.	562479	female	C152	Cond_Cmpt	561611	male
C91	RJB	562285	male	C152	Cond_Cmpt	561610	female
C91	RJB	562282	female	C158	CondensorCmpt.	562477	male
C92A	EngineCmpt.	563226	male	C158	CondensorCmpt.	562479	female
C92A	EngineCmpt.	563613	female	C159	CondensorCmpt.	566033	male
C92C	EngineCmpt.	562581	male	C159	CondensorCmpt.	566034	female
C92C	EngineCmpt.	562583	female	C170	LH_Console	561637	male
C94_plug	FJB	563589	male	C170	LH_Console	561636	female
C94_socket	FJB	563590	female	C171	LH_Console	561646	male
C96	FJB	561643	male	C171	LH_Console	561645	female
C96	FJB	561642	female	C172	LHConsole	561637	male
C97	FJB	561643	male	C172	LHConsole	561635	female
C97	FJB	561642	female	C193_plug	RJB	563589	male
C100	EvaporatorCmpt.	562477	male	C193_socket	RJB	563590	female
C100	EvaporatorCmpt.	562479	female	C194	FJB	563589	male
C100S	EvaporatorCmpt.	562477	male	C194	FJB	563590	female
C100S	EvaporatorCmpt.	562479	female	C195	Dash	563347	male
C101	Service_Cmpt	561690	male	C195	Dash	560489	female
C101	Service_Cmpt	561566	female	C222	FJB	562477	male
C102A	ServiceCmpt.	563226	male	C222	FJB	562479	female
C102A	ServiceCmpt.	563613	female	C223	FJB	563227	male
C104S_plug	3rdLuggCmpt.	563589	male	C223	FJB	563614	female
C104S_socket	3rdLuggCmpt.	563590	female	C224	FJB	561637	male
C105_plug	FJB	562581	male	C224	FJB	561636	female
C105_socket	FJB	562583	female	C225	FJB	562650	male
C106_plug	FJB	562581	male	C225	FJB	562649	female
C106_socket	FJB	562583	female	C226	FJB	562650	male
C110	Dash	568110	male	C226	FJB	562649	female
C110	Dash	568109	female	C228	EngineCmpt.	562477	male
C114	3rd_RH_Lugg_Cmpt	561550	male	C228	EngineCmpt.	562479	female
C114	3rd_RH_Lugg_Cmpt	561667	female	C242	ServiceCmpt.	562789	male
C119A	rearenginedoor	568110	male	C242	ServiceCmpt.	565131	female
C119A	rearenginedoor	568109	female	C243	ServiceCmpt.	563347	male
C121	EngineDoor	562566	male	C243	ServiceCmpt.	563180	female
C121	EngineDoor	562565	female	C266	EntraceDoor	561640	male
C122	EngineDoor	562566	male	C266	EntraceDoor	561639	female
C122	EngineDoor	562565	female	C279	Service_Cmpt	562477	male

CONNECTORS LIST

No	Location	Part #	Gender	No	Location	Part #	Gender
C279	Service_Cmpt	562479	female	C_ALT	EngineCmpt.	562581	male
C290	Rear_Vehicle	562477	male	C_ALT	EngineCmpt.	562583	female
C290	Rear_Vehicle	562479	female	C_ALT3	EngineCmpt.	562477	male
C304	2ndLuggCmpt.	560852	male	C_ALT3	EngineCmpt.	562479	female
C304	2ndLuggCmpt.	560851	female	C_Mo9	Evap_Cmpt	561577	male
C305	2ndLuggCmpt.	560852	male	C_Mo9	Evap_Cmpt	561605	female
C305	2ndLuggCmpt.	560851	female	C_Se51	Driverseat	563589	male
C380A	Dash	564222	male	C_Se51	Driverseat	563590	female
C380A	Dash	564224	female	CCust	RJB	562477	male
C397	RJB	562285	male	CCust	RJB	562479	female
C397	RJB	562282	female	CF167	RH_Console	562350	male
C463	rearaxlecompt.	568112	male	CF167	RH_Console	563764	female
C463	rearaxlecompt.	568111	female	CInt1	FJB	563227	male
C464A	RJB	564222	male	CInt1	FJB	563614	female
C464A	RJB	564224	female	CInt2	FJB	563226	male
C551	3rdLuggCmpt.	561476	male	CInt2	FJB	563613	female
C551	3rdLuggCmpt.	561477	female	CSo1	SlideOutPanel	562581	male
C553	2ndLuggCmpt.	561476	male	CSo1	SlideOutPanel	562583	female
C553	2ndLuggCmpt.	561477	female	CSo2	SlideOutPanel	561643	male
C554	1stLuggCmpt.	561476	male	CSo2	SlideOutPanel	561641	female
C554	1stLuggCmpt.	561477	female	CSo5	SlideOutPanel	561847	male
C555	1stLuggCmpt.	561476	male	CSo5	SlideOutPanel	561862	female
C555	1stLuggCmpt.	561477	female	CSo7	SlideOutPanel	562581	male
C556	3rdLuggCmpt.	561476	male	CSo7	SlideOutPanel	562583	female
C556	3rdLuggCmpt.	561477	female	CT_In	Rear_Vehicle	563582	male
C557	2ndLugg.Cmpt.	561476	male	CT_In	Rear_Vehicle	563583	female
C557	2ndLuggCmpt.	561477	female	EI	EngineCmpt.	563739	male
C559	3rdLuggCmpt.	561476	male	L1A	EngineCmpt.	562848	male
C559	3rdLuggCmpt.	561477	female	L10	Dash	561247	male
C560	3rdLuggCmpt.	561476	male	L16.A	FrontRoof	562615	female
C560	3rdLuggCmpt.	561477	female	L16.B	FrontRoof	562615	female
C561	3rdLuggCmpt.	561476	male	L17.A	FrontRoof	562615	female
C561	3rdLuggCmpt.	561477	female	L17.B	FrontRoof	562615	female
C562	3rdLuggCmpt.	561476	male	L18.A	EntraceDoor	561626	female
C562	3rdLuggCmpt.	561477	female	L18.B	EntraceDoor	561626	female
C606_plug	FJB	561690	male	L21	FrontRoof	562486	female
C606_socket	FJB	561566	female	L22	FrontRoof	562486	female
C607_plug	FJB	561577	male	L23	FrontRoof	562486	female
C607_socket	FJB	561605	female	L24	FrontRoof	562486	female
C617	Mirror_LH	563801	male	L25	FrontRoof	562486	female
C617	Mirror_LH	563800	female	L26	FrontRoof	562486	female
C618	Mirror_RH	563801	male	L27	FrontRoof	562486	female
C618	Mirror_RH	563800	female	L59	OutsidefrontRH	562623	male

CONNECTORS LIST

No	Location	Part #	Gender	No	Location	Part #	Gender
L59A	OutsideFrontRH	563366	male	L96	Outside_Front_RH	562902	female
L59B	OutsideFrontRH	562623	male	L97.A	Outside_Front_LH	563069	female
L60	OutsideFrontLH	562623	male	L97.B	Outside_Front_LH	563069	female
L60A	OutsideFrontLH	563366	male	L98.A	EntranceDoor	563069	female
L60B	OutsideFrontLH	562623	male	L98.B	EntraceDoor	563069	female
L61	OutsideFrontRH	562601	male	L120	DriverSeat	562237	female
L62	OutsideFrontLH	562601	male	L173	EngineCmpt.	563590	female
L63	FrontSideRH	562155	male	L174A	EngineCmpt.	563590	female
L64	OutsideFrontRH	562155	male	L176	3rd_Lugg_Cmpt	561247	male
L65	FrontSideLH	562155	male	L177	3rd_Lugg_Cmpt	561247	male
L66	OutsideFrontLH	562155	male	L178	4thLuggCmpt.	561247	male
L67	3rdLuggCmpt.	562155	male	L179	4thLuggCmpt.	561247	male
L68	3rdLuggCmpt.	562155	male	L180	2nd_Lugg_Cmpt	561247	male
L69	EvapCmpt.	562155	male	L181	2nd_Lugg_Cmpt	561247	male
L70	EvapCmpt.	562155	male	L182	1st_Lugg_Cmpt	561247	male
L71A	RearVehicleLH	562601	male	L183	1st_Lugg_Cmpt	561247	male
L72	Rear_VehicleLH	562155	male	L184	ServiceCmpt.	561247	male
L73A	RearVehicleRH	562601	male	L185.A	Dash	561539	male
L74	RearVehicleRH	562155	male	L185.B	Dash	561539	male
L75	RearVehicleLH	562155	male	L186.A	Dash	561539	male
L76	RearVehicleRH	562155	male	L186.B	Dash	561539	male
L77A	RearVehicleRH	562601	male	L187	Engine_Cmpt	561690	male
L78A	RearVehicleRH	562601	male	L193.A	Dash	560488	female
L79A	RearVehicleLH	562601	male	L193.B	Dash	560488	female
L80A	RearVehicleLH	562601	male	L194.A	Dash	562019	female
L81.A	DPFDoor	562835	female	L194.B	Dash	560488	female
L81.B	DFPDoor	562834	male	L195.A	Dash	560488	female
L82A	EngineDoor	562348	female	L195.B	Dash	560488	female
L83A	EngineDoor	562348	female	L199	EngineCmpt.	562848	male
L84	RearRoof	562486	female	L203	RH_Console	561690	male
L85	RearRoof	562486	female	L204	WCL_Upper_Door	562803	male
L86	RearRoof	562486	female	L205	EvapCmpt.	562485	male
L87	RearRoof	562486	female	L206	WCL_Upper_Door	562803	male
L88	RearRoof	562486	female	L207.A	WCL_System	561699	female
L89	RearRoof	562486	female	L207.B	WCL_System	561701	female
L90	RearRoof	562486	female	L207.C	WCL_System	561701	female
L91A	RearVehiculeLH	562601	male	L207.D	WCL_System	561699	female
L92A	RearVehicleRH	562601	male	L207.E	WCL_System	561701	female
L93.A	RearOutsideLH	563069	female	L207.F	WCL_System	561699	female
L93.B	RearOutsideLH	563069	female	L207.G	WCL_System	561699	female
L94.A	RearOutsideRH	563069	female	L207.H	WCL_System	560926	female
L94.B	RearOutsideRH	563069	female	L207.I	WCL_System	560926	female
L95	Outside_Front_LH	562902	female	L282	Preheater_Cmpt	561690	male

CONNECTORS LIST

No	Location	Part #	Gender	No	Location	Part #	Gender
L285.A	Rear_Vehicle	562835	female	Mo43	3rdLuggCmpt.LH	561477	female
L285.B	Rear_Vehicle	562834	male	Mo50	FrontAxleCmpt.	561690	male
L286.A	Rear_Vehicle	562835	female	Mo54	Service_Cmpt	562474	male
L286.B	Rear_Vehicle	562834	male	Mo55	EntraceDoor	563626	male
L298A	EngineCmpt.	563590	female	Mo65	EngineCmpt.	568089	male
L304	OutsideLuggDoorLH	562155	male	Mo67	EngineCmpt.	568089	male
L305	OutsideLuggDoorRH	562155	male	Mo68	EngineCmpt.	568089	male
L306	Radiator_Door	562155	male	Mo69	EngineCmpt.	568089	male
L307	Radiator_Door	562155	male	Mo70	EngineCmpt.	568089	male
L309	RJB	561247	male	Mo71	EngineCmpt.	568089	male
L350A.A	RearAxleCmpt.	564552	male	Mo72	EngineCmpt.	568089	male
L350A.B	RearAxleCmpt.	563340	male	Mo73	EngineCmpt.	568089	male
L350A.C	RearAxleCmpt.	562251	male	MoSO1	FrontSlideOut	561967	male
Mo3	Dash	561667	female	MoSO2	RearSlideOut	561967	male
Mo4	Dash	562076	male	PC1	CantrackCable	562650	male
Mo7	Cond_Cmpt	563691	male	PC1	CantrackCable	562649	female
Mo8	Cond_Cmpt	563691	male	Pot1.A	Dash	560488	female
Mo11	CondensorCmpt.	568089	male	Pot1.B	Dash	560488	female
Mo12	Engine_Cmpt	561690	male	Pot1.C	Dash	560488	female
Mo15	Front_Ceiling	560900	female	R1.A	RJB	562486	female
Mo16	Front_Ceiling	560900	female	R3	RJB	563409	male
Mo17	RH_Console	563626	male	R6	Dash	564496	male
Mo19	Fr_Service_Door	562474	male	R7	Dash	564496	male
Mo20	Fr_Service_Door	562474	male	R12	Evap_Cmpt	563409	male
Mo22	RH_Console	561186	male	R21	FJB	560525	male
Mo24	RH_Console	562348	female	R27	Dash	564496	male
Mo25	RH_Console	562348	female	R29	RJB	563409	male
Mo26	EntraceDoor	564161	male	R30	FJB	564496	male
Mo27	Cond_Cmpt	563691	male	R31	FJB	564496	male
Mo28	Cond_Cmpt	563691	male	R36	Dash	564496	male
Mo29	RJB	563590	female	R37	Dash	564496	male
Mo30	1stLuggCmpt.LH	564161	male	R38	FJB	564496	male
Mo31	1stLuggCmpt.RH	564161	male	R47	WCL_System	564496	male
Mo32	2ndLuggCmpt.LH	564161	male	Res3	ParcelRack	563590	female
Mo33	2ndLuggCmpt.RH	564161	male	Res4	RH_Console	563590	female
Mo34	3rdLuggCmpt.LH	564161	male	Res6	FJB	563590	female
Mo35	3rdLuggCmpt.RH	564161	male	Res7	Dashboard	563590	female
Mo36	CompressorDoor	564161	male	Res15	Engine_Cmpt	561782	male
Mo37	4thLuggCmpt.RH	564161	male	Res19	FJB	563590	female
Mo38	4thLuggCmpt.LH	564161	male	Res20	FJB	563590	female
Mo40	1stLuggCmpt.LH	561477	female	Res31	UreaCmpt.	562350	male
Mo41	2ndLuggCmpt.LH	561477	female	Res32	UreaCmpt.	563764	female
Mo42	3rdLuggCmpt.LH	561477	female	Res53.A	CondensorCmpt.	563590	female

CONNECTORS LIST

No	Location	Part #	Gender	No	Location	Part #	Gender
Res99	Dash	563590	female	Se46	RearAxleCmpt.	562348	female
RSO1_1	SlideOutPanel	564496	male	Se49	enginecompt.	561690	female
RSO1_2	SlideOutPanel	564496	male	Se51	driverseat	563589	male
RSO2_1	SlideOutPanel	564496	male	Se53	Service_Cmpt	563159	female
RSO2_2	SlideOutPanel	564496	male	Se54	Service_Cmpt	563159	female
Se2	Servicecompt.	561566	female	Se55	Service_Cmpt	563159	male
Se11.A	Cond_Cmpt	560082	female	Se56	WCLcompt.	562884	female
Se11.B	Cond_Cmpt	560082	female	Se60	Service_Cmpt	563409	male
Se11.C	Cond_Cmpt	560082	female	Se62	WCL_system	561690	male
Se13	Engine_Cmpt	562350	male	Se63	RearAxleCmpt.	641132	female
Se14.A	Driver_Area	561782	male	Se64	RearAxleCmpt.	641132	female
Se14.B	Driver_Area	561781	female	Se65	Dash	564042	female
Se15.A	EntraceDoor	560488	female	Se66	FrontAxleCmpt.	564039	female
Se15.B	EntraceDoor	560488	female	Se67	ServiceCmpt.	563159	female
Se15.C	EntraceDoor	560488	female	Se69	ServiceCmpt.	563159	female
Se16.A	EntraceDoor	562651	female	Se89	Enginecompt.	562350	male
Se16.B	EntraceDoor	562651	female	Se94	WCLUpperDoor	562877	female
Se17.A	EntraceDoor	562291	female	Se100	WCL_Upper_Door	562479	female
Se17.B	EntraceDoor	562291	female	SESO1	SlideOutPanel	563159	female
Se17.C	EntraceDoor	562291	female	SeSO2	SlideOutFRLH	562479	female
Se18	ServiceCmpt.	561566	female	SESO2_S	SlideOutFRLH	562479	female
Se19_P	Service_Cmpt	563677	male	SeSO3	SlideOutFRLH	562479	female
Se19_S	Service_Cmpt	563677	male	SeSO5	SlideOutRrLH	562479	female
Se20	Evap_Cmpt	562426	male	SESO5_S	SlideOutRrLH	562479	female
Se21	Dash	561248	female	SeSO6	SlideOutRrLH	562479	female
Se23	EngineCmpt.	563159	female	shell1_16	Driver_Area	562471	male
Se23A	EngineCmpt.	563159	female	So3	RHConsole	641385	male
Se24	EngineCmpt.	563758	female	So7	Service_Cmpt	561566	female
Se24A	EngineCmpt.	563758	female	So8	ServiceCmpt.	641385	male
Se25	EvapCmpt.	561248	female	So9	EngineCmpt.	560016	female
Se29	Engine_Cmpt	561566	female	So11	Cond_Cmpt	561566	female
Se30	EngineCmpt.	562877	female	So13	Evap_Cmpt	563204	female
Se31	EngineCmpt.	562877	female	So17	Service_Cmpt	562848	male
Se32	Rear_Axle_Cmpt	562426	male	So21	Front_Axle_Cmpt	564046	female
Se33	Rear_Axle_Cmpt	562856	male	So22	Front_Axle_Cmpt	564046	female
Se34	Rear_Axle_Cmpt	562426	male	So23	Rear_Axle_Cmpt	564046	female
Se35	Rear_Axle_Cmpt	562426	male	So24	Rear_Axle_Cmpt	564046	female
Se36	Rear_Axle_Cmpt	562427	male	So27	RearAxleCmpt.	564045	female
Se37	Front_Axle_LH	641132	female	So28	ServiceCmpt.	641385	male
Se38	Front_Axle_RH	641132	female	So29	ServiceCmpt.	641385	male
Se39	Rear_Axle_LH	641132	female	So30	ServiceCmpt.	641385	male
Se40	Rear_Axle_LH	641132	female	So31	ServiceCmpt.	641385	male
Se45	ServiceCmpt.	563409	male	So32	ServiceCmpt.	641385	male

CONNECTORS LIST

No	Location	Part #	Gender	No	Location	Part #	Gender
So36	EngineCmpt.	561690	male	Sw46A.A	3rd_RH_Lugg_Cmpt	562403	female
So50	RearAxleCmpt.	564046	female	Sw46A.B	3rd_RH_Lugg_Cmpt	562403	female
So52	FrontAxleCmpt.	564045	female	Sw47.A	4thLuggCmpt.	562403	female
spBar4	EngineCmpt.	564135	male	Sw47.B	4thLuggCmpt.	562403	female
spBar5	EngineCmpt.	564135	male	Sw48.A	4thLuggCmpt.	562403	female
spBar6	EngineCmpt.	564135	male	Sw48.B	4thLuggCmpt.	562403	female
spBar7	CondCmpt.	564135	male	Sw49.A	2nd_Lugg_Cmpt	562403	female
spBar11	EngineCmpt.	564135	male	Sw49.B	2ndLuggCmpt.	562403	female
spBar12	EngineCmpt.	564135	male	Sw50.A	2nd_Lugg_Cmpt	562403	female
spBar13	EngineCmpt.	564135	male	Sw51.A	1st_Lugg_Cmpt	562403	female
spBar14	EngineCmpt.	564135	male	Sw52.A	1st_Lugg_Cmpt	562403	female
spBar15	EngineCmpt.	564135	male	Sw58.A	EngineCmpt.	563135	male
spBar16	EngineCmpt.	564135	male	Sw59	EngineCmpt.	563135	male
spBar19	CondCmpt.	564135	male	Sw63A	LHConsole	562763	male
spBar20	CondCmpt.	564135	male	Sw64.A	ServiceCmpt.	560815	female
spBar21	CondCmpt.	564135	male	Sw64.B	Ssp	560815	female
spBar22	EngineCmpt.	564135	male	Sw82	RJB	563135	male
spBar23	EngineCmpt.	564135	male	Sw83.A	Dash	560082	female
spBar24	EngineCmpt.	564135	male	Sw83.B	Dash	560815	female
Sw1.C258	Driver_Area	561188	female	Sw83.C	Dash	560082	female
Sw1.C259	Driver_Area	561186	male	Sw83.D	Dash	560815	female
Sw2	Dash	562763	male	Sw85	LH_Console	562749	male
Sw3	Dash	562763	male	Sw99	Dash	562763	male
Sw4	Dash	562763	male	Sw102	Dash	562763	male
Sw6	Dash	562763	male	Sw103A	LHConsole	562763	male
Sw14	Dash	562763	male	Sw104	Dash	562763	male
Sw16	Dash	562763	male	Sw107.A	LHConsole	561457	female
Sw17	Dash	562763	male	Sw107.B	LHConsole	561457	female
Sw18A	LH_Console	562763	male	Sw107.C	LHConsole	561457	female
Sw20	Dashboard	562763	male	Sw107.D	LHConsole	561457	female
Sw24	Dash	562763	male	Sw107.E	LHConsole	561457	female
Sw24A	Dash	562763	male	Sw107.F	LHConsole	561457	female
Sw34	Dash	562763	male	Sw107.G	LHConsole	561457	female
Sw35	LHConsole	562763	male	Sw107.H	LHConsole	561457	female
Sw38	LH_Console	562763	male	Sw107.J	LHConsole	561457	female
Sw40	LH_Console	561690	male	Sw107.K	LHConsole	561457	female
Sw41	LH_Console	562749	male	Sw108	LHConsole	562763	male
Sw42	WCL_System	561636	female	Sw109.A	1st_Lugg_LH	560079	female
Sw44.A	ServiceCmpt.	562403	female	Sw109.B	1st_Lugg_LH	560079	female
Sw45.A	3rd_Lugg_Cmpt	562403	female	Sw110.A	1st_Lugg_RH	560079	female
Sw45.B	3rdLuggCmpt.	562403	female	Sw110.B	1st_Lugg_RH	560079	female
Sw46.A	3rd_Lugg_Cmpt	562403	female	Sw111.A	2ndLuggCmpt.	560079	female
Sw46.B	3rdLuggCmpt.	562403	female	Sw111.B	2ndLuggCmpt.	560079	female

CONNECTORS LIST

No	Location	Part #	Gender	No	Location	Part #	Gender
Sw112.A	2ndLuggCmpt.	560079	female				
Sw112.B	2ndLuggCmpt.	560079	female				
Sw113.A	2ndLuggCmpt.	560079	female				
Sw113.B	2ndLuggCmpt.	560079	female				
Sw114.A	3rd_Lugg_RH	560079	female				
Sw114.B	3rd_Lugg_RH	560079	female				
Sw115.A	Compr_Door	560079	female				
Sw115.B	Compr_Door	560079	female				
Sw122	ServiceCmpt.	562763	male				
Sw137	Dash	562763	male				
Sw156	LH_Console	562763	male				
Sw157	Dash	562763	male				
Sw158	Dash	562763	male				
SwSo1	FrontSlideOut	561552	female				
SwSo2	RearSlideOut	561552	female				
Term106	RJB	{part_no	N/A				
Term107	RJB	{part_no	N/A				
VECF1	FJB	563186	male				
VECF2	FJB	563183	male				
VECF3	FJB	563185	male				
VECF4	FJB	563182	male				
VECF9	FJB	563448	male				
VECF10	FJB	563181	male				
VECF11	FJB	563184	male				
VECF12	FJB	563187	male				
VECR1	RJB	563186	male				
VECR2	RJB	563183	male				
VECR3	RJB	563185	male				
VECR4	RJB	563182	male				
VECR9	RJB	563448	male				
VECR10	RJB	563181	male				
VECR11	RJB	563184	male				
VECR12	RJB	563187	male				
VECT2	Rear_Vehicle	563716	male				
VECT3	RearVehicle	563718	male				
VECT4	RearVehicle	563714	male				
Y80	Engine_Cmpt	563789	male				
Y81	Cond_Cmpt	563793	male				

CONNECTORS LIST

No	Location	Part #	Gender	No	Location	Part #	Gender
A1	RJB	563975	male	A81.JC	FJB	562957	male
A2	FJB	563984	male	A83	Parcelrack	565970	female
A3	Dash	562363	male	A96	FJB	564205	male
A4.A	Service_Cmpt	562428	female	A97	Dash	563226	male
A4.B	Service_Cmpt	561188	female	A97A	Dash	563226	male
A5	Service_Cmpt	562428	female	A97A	Dash	563613	female
A6	Engine_Cmpt	562427	male	A97B	Dash	563226	male
A7	Rear_Axle_Cmpt	563979	male	A97B	Dash	563613	female
A9.Cx1	FJB	564041	female	A99	FJB	564205	male
A9.Cx2	FJB	563678	male	A100	Front_Axle_Cmpt	563632	male
A9.Cx3	FJB	564037	female	A101	Rr_Axle_Cmpt	563632	male
A9.Cx4	FJB	564038	female	A102	Rr_Axle_Cmpt	563632	male
A14.A	Dash	562766	male	A103	Dash	562070	female
A14.B	Dash	562767	male	A106	FrontVehicle	565974	male
A14.C	Dash	562765	male	A114A	Dash	564252	male
A15	Dash	562464	male	A130	Driver_Area	563226	male
A18.J1	FJB	562794	male	A131.A	Engine_Cmpt	561782	male
A18.J2	FJB	562650	male	A131.B	Engine_Cmpt	561781	female
A24.A	RH_Console	561890	male	A137A	CondensorCmpt.	20429843	male
A24.B	RH_Console	561566	female	A138	Cond_Cmpt	563787	male
A24.C	RH_Console	561889	female	A139	Dash	564501	male
A27	Service_Cmpt	562929	male	AE41.J1	FJB	563679	male
A28	Service_Cmpt	562928	male	AE41.J2	FJB	564037	female
A30.A	Dash	561611	male	AE41.J3	FJB	564004	male
A30.C	Dash	561889	female	AE42.J1	FJB	563679	male
A31.J1	Dash	562780	male	AE42.J2	FJB	564037	female
A31.J2	Dash	562842	male	AE42.J3	FJB	564004	male
A31.J3	Dash	562464	male	AE43.J1	FJB	563679	male
A31.J4	Dash	562465	male	AE43.J2	FJB	564037	male
A31.J5	Dash	563071	male	AE43.J3	FJB	565957	male
A34.J	EngineCmpt.	568118	male	AE44.J1	FJB	563679	male
A34.K	EngineCmpt.	564270	male	AE44.J2	FJB	564037	female
A34.L	EngineCmpt.	564269	male	AE44.J3	FJB	565957	male
A36.JA	FJB	562767	male	AE45.J1	FJB	563679	male
A36.JB	FJB	562765	male	AE45.J2	FJB	564037	female
A36.JC	FJB	562957	male	AE45.J3	FJB	565957	male
A40.A	FJB	561668	male	AE46.J1	FJB	563679	male
A77	Parcelrack	564547	male	AE46.J2	FJB	564037	female
A78	Parcelrack	562583	female	AE46.J3	FJB	565957	male
A79	Parcelrack	562583	female	AE47.J1	RHConsole	563679	male
A80	Parcelrack	562479	female	AE47.J2	RHConsole	564037	female
A81.JA	FJB	562767	male	AE47.J3	RHConsole	565957	male
A81.JB	FJB	562765	male	AE48.J1	RHConsole	563679	male

CONNECTORS LIST

No	Location	Part #	Gender	No	Location	Part #	Gender
AE48.J2	RHConsole	564037	female	B96B	Engine_Cmpt	563823	male
AE48.J3	RHConsole	565957	male	B97	Engine_Cmpt	563816	male
AE49.J1	RJB	563679	male	B98	Engine_Cmpt	563817	male
AE49.J2	RJB	564037	male	B99	Engine_Cmpt	563815	male
AE49.J3	RJB	565957	male	B115A	EngineCmpt.	564226	male
AE50.J1	RJB	563679	male	B142C	CondensorCmpt.	563793	male
AE50.J2	RJB	564037	male	B310	EngineCmpt.	565967	male
AE50.J3	RJB	565957	male	C1	FJB	563589	male
AE51.J1	RJB	563679	male	C1	FJB	563590	female
AE51.J2	RJB	564037	female	C1S	FJB	563589	male
AE51.J3	RJB	565957	male	C1S	FJB	563590	female
AE52.J1	RJB	563679	male	C2	Service_Cmpt	563580	male
AE52.J2	RJB	564037	female	C2	Service_Cmpt	563581	female
AE52.J3	RJB	565957	male	C2A	FJB	563580	male
AE54.J1	EvaporatorCmpt.	563679	male	C2A	FJB	563581	female
AE54.J2	EvaporatorCmpt.	564037	female	C2B	FJB	564034	male
AE54.J3	EvaporatorCmpt.	565957	male	C2B	FJB	564035	female
AE55.J1	Dash	563679	male	C3_plug	RJB	563589	male
AE55.J2	Dash	564037	female	C3_socket	RJB	563590	female
AE55.J3	Dash	564004	male	C3S	RJB	563593	male
AE56.J1	Dash	563679	male	C3S	RJB	563590	female
AE56.J2	Dash	564037	male	C4	FJB	563580	male
AE56.J3	Dash	564004	male	C4	FJB	563581	female
AE57.J1	3rd_RH_Lugg_Cmpt	563679	male	C5	FJB	563589	male
AE57.J2	3rd_RH_Lugg_Cmpt	564037	male	C5	FJB	563590	female
AE57.J3	3rd_RH_Lugg_Cmpt	564004	male	C5S	FJB	563589	male
AE58.J1	SlideoutPanel	563679	male	C5S	FJB	563590	female
AE58.J2	SlideoutPanel	564037	male	C6	FJB	563582	male
AE58.J3	SlideoutPanel	565957	male	C6	FJB	563583	female
AE59.J1	SlideoutPanel	563679	male	C7	Service_Cmpt	562566	male
AE59.J2	SlideoutPanel	564037	male	C7	Service_Cmpt	562565	female
AE59.J3	SlideoutPanel	565957	male	C8	FJB	563227	male
AltLL.A	EngineCmpt.	563746	female	C8	FJB	563614	female
AltLL.B	EngineCmpt.	560815	female	C9	RJB	561986	male
AltLL.C	EngineCmpt.	564469	female	C9	RJB	561987	female
AltUL.A	EngineCmpt.	563746	female	C10	Engine_Cmpt	562477	male
AltUL.B	EngineCmpt.	560815	female	C10	Engine_Cmpt	562479	female
AltUL.C	EngineCmpt.	564469	female	C11	Service_Cmpt	563580	male
AltUR.A	EngineCmpt.	563746	female	C11	Service_Cmpt	563581	female
AltUR.B	EngineCmpt.	560815	female	C12	Engine_Cmpt	562581	male
AltUR.C	EngineCmpt.	564469	female	C12	Engine_Cmpt	562583	female
B85	Engine_Cmpt	563815	male	C13_plug	RH_Console	563589	male
B96	Engine_Cmpt	563821	male	C13_socket	RH_Console	563590	female

CONNECTORS LIST

No	Location	Part #	Gender	No	Location	Part #	Gender
C13S	RH_Console	563589	male	C49	FJB	561714	female
C13S	RH_Console	563590	female	C50	RJB	563226	male
C14	FrontVehicle	562581	male	C50	RJB	563613	female
C14	FrontVehicle	562583	female	C52	EvaporatorCmpt.	563618	male
C15A	Evap_Cmpt	568110	male	C52	EvaporatorCmpt.	563616	female
C15A	Evap_Cmpt	568109	female	C54	EngineCmpt.	563226	male
C17	RJB	560195	male	C54	EngineCmpt.	563613	female
C17	RJB	560169	female	C54A	EngineCmpt.	568110	male
C18	FJB	561986	male	C54A	EngineCmpt.	568109	female
C18	FJB	561987	female	C54B	EngineCmpt.	563589	male
C19	RJB	561986	male	C54B	EngineCmpt.	563590	female
C19	RJB	561987	female	C58	CondensorCmpt.	564567	male
C23	Evap_Cmpt	564034	male	C58	CondensorCmpt.	564568	female
C23	Evap_Cmpt	564035	female	C58A	CondensorCmpt.	564258	male
C24_plug	Evap_Cmpt	561690	male	C58A	CondensorCmpt.	566037	female
C24_socket	Evap_Cmpt	561566	female	C59	3rdLuggCmpt.	561643	male
C26	UreaCmpt.	563226	male	C59	3rdLuggCmpt.	561642	female
C26	UreaCmpt.	563613	female	C61	Fr_Service_Door	561669	male
C26A	UreaCmpt.	568110	male	C61	Fr_Service_Door	561670	female
C26A	UreaCmpt.	568109	female	C62	Fr_Service_Door	562566	male
C26B	UreaCmpt.	563227	male	C62	Fr_Service_Door	562565	female
C26B	UreaCmpt.	563614	female	C64	EngineCmpt.	568110	male
C29	WCL_System	563651	male	C64	EngineCmpt.	568109	female
C29	WCL_System	563652	female	C71	FJB	561646	male
C30	WCL_System	561710	male	C71	FJB	561645	female
C30	WCL_System	561709	female	C72	FJB	561646	male
C32W	3rd_RH_Lugg_Cmpt	561640	male	C72	FJB	561645	female
C32W	3rd_RH_Lugg_Cmpt	561639	female	C74	FJB	561645	female
C33	3rd_RH_Lugg_Cmpt	564034	male	C74	FJB	561646	male
C33	3rd_RH_Lugg_Cmpt	564035	female	C80	EvaporatorCmpt.	562477	male
C34	RH_Console	561986	male	C80	EvaporatorCmpt.	562479	female
C34	RH_Console	561987	female	C81	1st_Lugg_Cmpt	562477	male
C39A	EngineCmpt.	561782	male	C81	1st_Lugg_Cmpt	562479	female
C39A	EngineCmpt.	561781	female	C82	1st_Lugg_Cmpt	562477	male
C40	Dash	562485	male	C82	1st_Lugg_Cmpt	562479	female
C40	Dash	562486	female	C83	2nd_Lugg_Cmpt	562477	male
C44_plug	FJB	561577	male	C83	2nd_Lugg_Cmpt	562479	female
C44_socket	FJB	561605	female	C84	2nd_Lugg_Cmpt	562477	male
C45	FJB	561643	male	C84	2nd_Lugg_Cmpt	562479	female
C45	FJB	561642	female	C85	4rd_Lugg_Cmpt	562477	male
C46	WCL_System	562549	male	C85	4rd_Lugg_Cmpt	562479	female
C46	WCL_System	562550	female	C86	4rd_Lugg_Cmpt	563618	male
C49	FJB	562005	male	C86	4rd_Lugg_Cmpt	563616	female

CONNECTORS LIST

No	Location	Part #	Gender	No	Location	Part #	Gender
C87	EngineCmpt.	562485	male	C131A	EngineCmpt.	561781	female
C87	EngineCmpt.	562486	female	C131B	EngineCmpt.	561782	male
C88	3rd_RH_Lugg_Cmpt	563618	male	C131B	EngineCmpt.	561781	female
C88	3rd_RH_Lugg_Cmpt	563616	female	C132	RHConsol	561515	male
C89	CondensorCmpt.	562477	male	C132	RHConsol	561552	female
C89	CondensorCmpt.	562479	female	C133	Dash	561986	male
C91	RJB	562285	male	C133	Dash	561987	female
C91	RJB	562282	female	C133A	Dash	561986	male
C92A	EngineCmpt.	563226	male	C133A	Dash	561987	female
C92A	EngineCmpt.	563613	female	C134_plug	Dash	561577	male
C92C	EngineCmpt.	562581	male	C134_socket	Dash	561605	female
C92C	EngineCmpt.	562583	female	C152	Cond_Cmpt	561611	male
C94_plug	FJB	563589	male	C152	Cond_Cmpt	561610	female
C94_socket	FJB	563590	female	C158	CondensorCmpt.	562477	male
C96	FJB	561643	male	C158	CondensorCmpt.	562479	female
C96	FJB	561642	female	C159	CondensorCmpt.	566033	male
C97	FJB	561643	male	C159	CondensorCmpt.	566034	female
C97	FJB	561642	female	C170	LH_Console	561637	male
C100	EvaporatorCmpt.	562477	male	C170	LH_Console	561636	female
C100	EvaporatorCmpt.	562479	female	C171	LH_Console	561646	male
C100S	EvaporatorCmpt.	562477	male	C171	LH_Console	561645	female
C100S	EvaporatorCmpt.	562479	female	C172	LHConsole	561637	male
C101	Service_Cmpt	561690	male	C172	LHConsole	561635	female
C101	Service_Cmpt	561566	female	C193_plug	RJB	563589	male
C102A	ServiceCmpt.	563226	male	C193_socket	RJB	563590	female
C102A	ServiceCmpt.	563613	female	C194	FJB	563589	male
C104S_plug	3rdLuggCmpt.	563589	male	C194	FJB	563590	female
C104S_socket	3rdLuggCmpt.	563590	female	C195	Dash	563347	male
C105_plug	FJB	562581	male	C195	Dash	560489	female
C105_socket	FJB	562583	female	C222	FJB	562477	male
C106_plug	FJB	562581	male	C222	FJB	562479	female
C106_socket	FJB	562583	female	C223	FJB	563227	male
C110	PneumPanel	568110	male	C223	FJB	563614	female
C110	PneumPanel	568109	female	C224	FJB	561637	male
C114	3rd_RH_Lugg_Cmpt	561550	male	C224	FJB	561636	female
C114	3rd_RH_Lugg_Cmpt	561667	female	C225	FJB	562650	male
C119A	EngineDoor	568110	male	C225	FJB	562649	female
C119A	EngineDoor	568109	female	C226	FJB	562650	male
C121	EngineDoor	562566	male	C226	FJB	562649	female
C121	EngineDoor	562565	female	C228	EngineCmpt.	562477	male
C122	EngineDoor	562566	male	C228	EngineCmpt.	562479	female
C122	EngineDoor	562565	female	C242	ServiceCmpt.	562789	male
C131A	EngineCmpt.	561782	male	C242	ServiceCmpt.	565131	female

CONNECTORS LIST

No	Location	Part #	Gender	No	Location	Part #	Gender
C243.	ServiceCmpt.	562789	male	C606A	FJB	561566	female
C243.	ServiceCmpt.	565131	female	C606B	FJB	561690	male
C266	EntraceDoor	561640	male	C606B	FJB	561566	female
C266	EntraceDoor	561639	female	C607_plug	FJB	561577	male
C279	Service_Cmpt	562477	male	C607_socket	FJB	561605	female
C279	Service_Cmpt	562479	female	C607A	FJB	561577	male
C290	Rear_Vehicle	562477	male	C607A	FJB	561605	female
C290	Rear_Vehicle	562479	female	C607B	FJB	561577	male
C304	2ndLuggCmpt.	560852	male	C607B	FJB	561605	female
C304	2ndLuggCmpt.	560851	female	C617	Mirror_LH	563801	male
C305	2ndLuggCmpt.	560852	male	C617	Mirror_LH	563800	female
C305	2ndLuggCmpt.	560851	female	C618	Mirror_RH	563801	male
C380A	Dash	564222	male	C618	Mirror_RH	563800	female
C380A	Dash	564224	female	C_ALT	EngineCmpt.	562581	male
C397	RJB	562285	male	C_ALT	EngineCmpt.	562583	female
C397	RJB	562282	female	C_ALT3	EngineCmpt.	562477	male
C463	EngineCmpt.	568112	male	C_ALT3	EngineCmpt.	562479	female
C463	EngineCmpt.	568111	female	C_Mo9	Evap_Cmpt	561577	male
C464A	RJB	564222	male	C_Mo9	Evap_Cmpt	561605	female
C464A	RJB	564224	female	C_Se51	FJB	563589	male
C551	3rdLuggCmpt.	561476	male	C_Se51	FJB	563590	female
C551	3rdLuggCmpt.	561477	female	CCust	RJB	562477	male
C553	2ndLuggCmpt.	561476	male	CCust	RJB	562479	female
C553	2ndLuggCmpt.	561477	female	CF167	RH_Console	562350	male
C554	1stLuggCmpt.	561476	male	CF167	RH_Console	563764	female
C554	1stLuggCmpt.	561477	female	CInt1	FJB	563227	male
C555	1stLuggCmpt.	561476	male	CInt1	FJB	563614	female
C555	1stLuggCmpt.	561477	female	CInt2	FJB	563226	male
C556	3rdLuggCmpt.	561476	male	CInt2	FJB	563613	female
C556	3rdLuggCmpt.	561477	female	CSo1	SlideOutPanel	562581	male
C557	2ndLugg.Cmpt.	561476	male	CSo1	SlideOutPanel	562583	female
C557	2ndLuggCmpt.	561477	female	CSo2	SlideOutPanel	561643	male
C559	3rdLuggCmpt.	561476	male	CSo2	SlideOutPanel	561641	female
C559	3rdLuggCmpt.	561477	female	CSo5	SlideOutPanel	561847	male
C560	3rdLuggCmpt.	561476	male	CSo5	SlideOutPanel	561862	female
C560	3rdLuggCmpt.	561477	female	CSo7	SlideOutPanel	562581	male
C561	3rdLuggCmpt.	561476	male	CSo7	SlideOutPanel	562583	female
C561	3rdLuggCmpt.	561477	female	CT_In	Rear_Vehicle	563582	male
C562	3rdLuggCmpt.	561476	male	CT_In	Rear_Vehicle	563583	female
C562	3rdLuggCmpt.	561477	female	CT_Out	Rear_Vehicle	560478	female
C606_plug	FJB	561690	male	EI	EngineCmpt.	563739	male
C606_socket	FJB	561566	female	L1A	EngineCmpt.	562848	male
C606A	FJB	561690	male	L10	Dash	561247	male

CONNECTORS LIST

No	Location	Part #	Gender	No	Location	Part #	Gender
L16.A	FrontRoof	562615	female	L84.	RrRoof	562486	female
L16.B	FrontRoof	562615	female	L85.	RrRoof	562486	female
L17.A	FrontRoof	562615	female	L86.	RrRoof	562486	female
L17.B	FrontRoof	562615	female	L87.	RrRoof	562486	female
L18.A	EntraceDoor	561626	female	L88.	RrRoof	562486	female
L18.B	EntraceDoor	561626	female	L89.	RrRoof	562486	female
L21.	OutsideFront	560605	female	L90.	RrRoof	562486	female
L22.	OutsideFront	560605	female	L91A	RearVehiculeLH	562601	male
L23.	OutsideFront	560605	female	L92A	RearVehicleRH	562601	male
L24.	OutsideFront	560605	female	L93.B	RearOutsideLH	563069	female
L25.	OutsideFront	560605	female	L94.B	RearOutsideRH	563069	female
L26.	OutsideFront	560605	female	L95	Outside_Front_LH	562902	female
L27.	OutsideFront	560605	female	L96	Outside_Front_RH	562902	female
L59	OutsidefrontRH	562623	male	L97.B	Outside_Front_LH	563069	female
L59A	OutsideFrontRH	563366	male	L98.B	EntraceDoor	563069	female
L59B	OutsideFrontRH	562623	male	L120	DriverSeat	562237	female
L60	OutsideFrontLH	562623	male	L173	EngineCmpt.	563590	female
L60A	OutsideFrontLH	563366	male	L174A	EngineCmpt.	563590	female
L60B	OutsideFrontLH	562623	male	L176	3rd_Lugg_Cmpt	561247	male
L61	OutsideFrontRH	562601	male	L177	3rd_Lugg_Cmpt	561247	male
L62	OutsideFrontLH	562601	male	L178	4thLuggCmpt.	561247	male
L63	FrontSideRH	562155	male	L179	4thLuggCmpt.	561247	male
L64	OutsideFrontRH	562155	male	L180	2nd_Lugg_Cmpt	561247	male
L65	FrontSideLH	562155	male	L181	2nd_Lugg_Cmpt	561247	male
L66	OutsideFrontLH	562155	male	L182	1st_Lugg_Cmpt	561247	male
L67	3rdLuggCmpt.	562155	male	L183	1st_Lugg_Cmpt	561247	male
L68	3rdLuggCmpt.	562155	male	L184	ServiceCmpt.	561247	male
L69	EvapCmpt.	562155	male	L185.A	Dash	561539	male
L70	EvapCmpt.	562155	male	L185.B	Dash	561539	male
L71A	RearVehicleLH	562601	male	L186.A	Dash	561539	male
L72	Rear_VehicleLH	562155	male	L186.B	Dash	561539	male
L73A	RearVehicleRH	562601	male	L187	Engine_Cmpt	561690	male
L74	RearVehicleRH	562155	male	L193.A	Dash	560488	female
L75	RearVehicleLH	562155	male	L193.B	Dash	560488	female
L76	RearVehicleRH	562155	male	L194.A	Dash	562019	female
L77A	RearVehicleRH	562601	male	L194.B	Dash	560488	female
L78A	RearVehicleRH	562601	male	L195.A	Dash	560488	female
L79A	RearVehicleLH	562601	male	L195.B	Dash	560488	female
L80A	RearVehicleLH	562601	male	L199	EngineCmpt.	562848	male
L81.A	DPFDoor	562835	female	L203	RH_Console	561690	male
L81.B	DFPDoor	562834	male	L204	WCL_Upper_Door	562803	male
L82A	EngineDoor	562348	female	L205	EvapCmpt.	562485	male
L83A	EngineDoor	562348	female	L206	WCL_Upper_Door	562803	male

CONNECTORS LIST

No	Location	Part #	Gender	No	Location	Part #	Gender
L207.A	WCL_System	561699	female	Mo32	2ndLuggCmpt.LH	564161	male
L207.B	WCL_System	561701	female	Mo33	2ndLuggCmpt.RH	564161	male
L207.C	WCL_System	561701	female	Mo34	3rdLuggCmpt.LH	564161	male
L207.D	WCL_System	561699	female	Mo35	3rdLuggCmpt.RH	564161	male
L207.E	WCL_System	561701	female	Mo36	CompressorDoor	564161	male
L207.F	WCL_System	561699	female	Mo37	4thLuggCmpt.RH	564161	male
L207.G	WCL_System	561699	female	Mo38	4thLuggCmpt.LH	564161	male
L207.H	WCL_System	560926	female	Mo40	1stLuggCmpt.LH	561477	female
L207.I	WCL_System	560926	female	Mo41	2ndLuggCmpt.LH	561477	female
L282	Preheater_Cmpt	561690	male	Mo42	3rdLuggCmpt.LH	561477	female
L285.A	Rear_Vehicle	562835	female	Mo43	3rdLuggCmpt.LH	561477	female
L285.B	Rear_Vehicle	562834	male	Mo50	FrontAxleCmpt.	561690	male
L286.A	Rear_Vehicle	562835	female	Mo54	Service_Cmpt	562474	male
L286.B	Rear_Vehicle	562834	male	Mo55	EntraceDoor	563626	male
L298A	EngineCmpt.	563590	female	Mo65	EngineCmpt.	568089	male
L304	OutsideLuggDoorLH	562155	male	Mo67	EngineCmpt.	568089	male
L305	OutsideLuggDoorRH	562155	male	Mo68	EngineCmpt.	568089	male
L306	Radiator_Door	562155	male	Mo69	EngineCmpt.	568089	male
L307	Radiator_Door	562155	male	Mo70	EngineCmpt.	568089	male
L309	RJB	561247	male	Mo71	EngineCmpt.	568089	male
L350A.A	RearAxleCmpt.	564552	male	Mo72	EngineCmpt.	568089	male
L350A.B	RearAxleCmpt.	563340	male	Mo73	EngineCmpt.	568089	male
L350A.C	RearAxleCmpt.	562251	male	MoSO1	FrontSlideOut	562350	male
Mo3	Dash	561667	female	MoSO2	RearSlideOut	562350	male
Mo4	Dash	562076	male	PC1	CantrackCable	562650	male
Mo7	Cond_Cmpt	563691	male	PC1	CantrackCable	562649	female
Mo8	Cond_Cmpt	563691	male	Pot1.A	Dash	560488	female
Mo11	CondensorCmpt.	568089	male	Pot1.B	Dash	560488	female
Mo12	Engine_Cmpt	561690	male	Pot1.C	Dash	560488	female
Mo15.	FrCeling	563517	female	R1.A	RJB	562486	female
Mo16.	FrCeling	563517	female	R3	RJB	563409	male
Mo17	RH_Console	563626	male	R6	Dash	564496	male
Mo19	Fr_Service_Door	562474	male	R7	Dash	564496	male
Mo20	Fr_Service_Door	562474	male	R12	Evap_Cmpt	563409	male
Mo22	RH_Console	561186	male	R21	FJB	560525	male
Mo24	RH_Console	562348	female	R27	Dash	564496	male
Mo25	RH_Console	562348	female	R29	RJB	563409	male
Mo26	EntraceDoor	564161	male	R30	FJB	564496	male
Mo27	Cond_Cmpt	563691	male	R31	FJB	564496	male
Mo28	Cond_Cmpt	563691	male	R36	Dash	564496	male
Mo29	RJB	563590	female	R37	Dash	564496	male
Mo30	1stLuggCmpt.LH	564161	male	R38	FJB	564496	male
Mo31	1stLuggCmpt.RH	564161	male	R47	WCL_System	564496	male

CONNECTORS LIST

No	Location	Part #	Gender	No	Location	Part #	Gender
R167	RH_Console	564496	male	Se30	EngineCmpt.	562877	female
Res3	ParcelRack	563590	female	Se31	EngineCmpt.	562877	female
Res4	RH_Console	563590	female	Se32	Rear_Axle_Cmpt	562426	male
Res6	FJB	563590	female	Se33	Rear_Axle_Cmpt	562856	male
Res7	Dashboard	563590	female	Se34	Rear_Axle_Cmpt	562426	male
Res15	Engine_Cmpt	561782	male	Se35	Rear_Axle_Cmpt	562426	male
Res19	FJB	563590	female	Se36	Rear_Axle_Cmpt	562427	male
Res20	FJB	563590	female	Se37	Front_Axle_LH	641132	female
Res31	UreaCmpt.	562350	male	Se38	Front_Axle_RH	641132	female
Res32	UreaCmpt.	563764	female	Se39	Rear_Axle_LH	641132	female
Res46	Rear_Axle	563590	female	Se40	Rear_Axle_LH	641132	female
Res53.A	CondensorCmpt.	563590	female	Se45	ServiceCmpt.	563409	male
Res99	Dash	563590	female	Se46	RearAxleCmpt.	562348	female
RSO1_1	SlideOutPanel	564496	male	Se49	EngineCmpt.	561690	male
RSO1_2	SlideOutPanel	564496	male	Se51	DriverSeat	563589	male
RSO2_1	SlideOutPanel	564496	male	Se53	Service_Cmpt	563159	female
RSO2_2	SlideOutPanel	564496	male	Se54	Service_Cmpt	563159	female
Se2	FJB	561566	female	Se55	Service_Cmpt	563159	female
Se11.A	Cond_Cmpt	560082	female	Se56	WCLcompt.	562884	female
Se11.B	Cond_Cmpt	560082	female	Se60	Service_Cmpt	563409	male
Se11.C	Cond_Cmpt	560082	female	Se62	WCL_system	561690	male
Se13	Engine_Cmpt	562350	male	Se63	RearAxleCmpt.	641132	female
Se14.A	Driver_Area	561782	male	Se64	RearAxleCmpt.	641132	female
Se14.B	Driver_Area	561781	female	Se65	Dash	564042	female
Se15.A	EntraceDoor	560488	female	Se66	FrontAxleCmpt.	564039	female
Se15.B	EntraceDoor	560488	female	Se67	ServiceCmpt.	563159	female
Se15.C	EntraceDoor	560488	female	Se69	ServiceCmpt.	563159	female
Se16.A	EntraceDoor	562651	female	Se89	EngineCmpt	562350	male
Se16.B	EntraceDoor	562651	female	Se94	WCL_system	562877	female
Se17.A	EntraceDoor	562291	female	Se100	WCL_Upper_Door	562479	female
Se17.B	EntraceDoor	562291	female	SESO1	SlideOutPanel	563159	female
Se17.C	EntraceDoor	562291	female	SESO2_SESO3	Frontslideout	562479	female
Se18	ServiceCmpt.	561566	female	SESO5_SESO6	Rearslideout	562479	female
Se19_P	Service_Cmpt	563677	male	shell1_1617	Driver_Area	562471	male
Se19_S	Service_Cmpt	563677	male	So3	RHConsole	641385	male
Se20.	Front_Axle_Cmpt	562426	male	So7	Service_Cmpt	561566	female
Se21	Dash	561248	female	So8	ServiceCmpt.	641385	male
Se23	EngineCmpt.	563159	female	So9	EngineCmpt.	560016	female
Se23A	EngineCmpt.	563159	female	So11	Cond_Cmpt	561566	female
Se24	EngineCmpt.	563758	female	So13	Evap_Cmpt	563204	female
Se24A	EngineCmpt.	563758	female	So17	Service_Cmpt	562848	male
Se25	EvapCmpt.	561248	female	So21	Front_Axle_Cmpt	564046	female
Se29	Engine_Cmpt	561566	female	So22	Front_Axle_Cmpt	564046	female

CONNECTORS LIST

No	Location	Part #	Gender	No	Location	Part #	Gender
So23	Rear_Axle_Cmpt	564046	female	Sw35	LHConsole	562763	male
So24	Rear_Axle_Cmpt	564046	female	Sw38	LH_Console	562763	male
So27	RearAxleCmpt.	564045	female	Sw40	LH_Console	561690	male
So28	ServiceCmpt.	641385	male	Sw41	LH_Console	562749	male
So29	ServiceCmpt.	641385	male	Sw42	WCL_System	561636	female
So30	ServiceCmpt.	641385	male	Sw44.A	ServiceCmpt.	562403	female
So31	ServiceCmpt.	641385	male	Sw45.A	3rd_Lugg_Cmpt	562403	female
So32	ServiceCmpt.	641385	male	Sw45.B	3rdLuggCmpt.	562403	female
So36	EngineCmpt.	561690	male	Sw46.A	3rd_Lugg_Cmpt	562403	female
So50	RearAxleCmpt.	564046	female	Sw46.B	3rdLuggCmpt.	562403	female
So52	FrontAxleCmpt.	564045	female	Sw46A.A	3rd_RH_Lugg_Cmpt	562403	female
spBar4	EngineCmpt.	564135	male	Sw46A.B	3rd_RH_Lugg_Cmpt	562403	female
spBar5	EngineCmpt.	564135	male	Sw47.A	4thLuggCmpt.	562403	female
spBar6	EngineCmpt.	564135	male	Sw47.B	4thLuggCmpt.	562403	female
spBar7	CondCmpt.	564135	male	Sw48.A	4thLuggCmpt.	562403	female
spBar11	EngineCmpt.	564135	male	Sw48.B	4thLuggCmpt.	562403	female
spBar12	EngineCmpt.	564135	male	Sw49.A	2nd_Lugg_Cmpt	562403	female
spBar13	EngineCmpt.	564135	male	Sw49.B	2ndLuggCmpt.	562403	female
spBar14	EngineCmpt.	564135	male	Sw50.A	2nd_Lugg_Cmpt	562403	female
spBar15	EngineCmpt.	564135	male	Sw51.A	1st_Lugg_Cmpt	562403	female
spBar16	EngineCmpt.	564135	male	Sw52.A	1st_Lugg_Cmpt	562403	female
spBar19	CondCmpt.	564135	male	Sw58.A	EngineCmpt.	563135	male
spBar20	CondCmpt.	564135	male	Sw59	EngineCmpt.	563135	male
spBar21	CondCmpt.	564135	male	Sw63A	LHConsole	562763	male
spBar22	EngineCmpt.	564135	male	Sw64.A	ServiceCmpt.	560815	female
spBar23	EngineCmpt.	564135	male	Sw64.B	Ssp	560815	female
spBar24	EngineCmpt.	564135	male	Sw82	RJB	563135	male
spBar26	EngineCmpt.	564135	male	Sw83.A	Dash	560082	female
spBar27	EngineCmpt.	564135	male	Sw83.B	Dash	560815	female
Sw1.C258	Driver_Area	561188	female	Sw83.C	Dash	560082	female
Sw1.C259	Driver_Area	561186	male	Sw83.D	Dash	560815	female
Sw2	Dash	562763	male	Sw85	LH_Console	562749	male
Sw3	Dash	562763	male	Sw99	Dash	562763	male
Sw4	Dash	562763	male	Sw102	Dash	562763	male
Sw6	Dash	562763	male	Sw103A	LHConsole	562763	male
Sw14	Dash	562763	male	Sw104	Dash	562763	male
Sw16	Dash	562763	male	Sw107.A	LHConsole	561457	female
Sw17	Dash	562763	male	Sw107.B	LHConsole	561457	female
Sw18A	LH_Console	562763	male	Sw107.C	LHConsole	561457	female
Sw20	Dashboard	562763	male	Sw107.D	LHConsole	561457	female
Sw24	Dash	562763	male	Sw107.E	LHConsole	561457	female
Sw24A	Dash	562763	male	Sw107.F	LHConsole	561457	female
Sw34	Dash	562763	male	Sw107.G	LHConsole	561457	female

CONNECTORS LIST

No	Location	Part #	Gender	No	Location	Part #	Gender
Sw107.H	LHConsole	561457	female	VECR10	RJB	563181	male
Sw107.J	LHConsole	561457	female	VECR11	RJB	563184	male
Sw107.K	LHConsole	561457	female	VECR12	RJB	563187	male
Sw108	LHConsole	562763	male	VECT2	Rear_Vehicle	563716	male
Sw109.A	1st_Lugg_LH	560079	female	VECT3	RearVehicle	563718	male
Sw109.B	1st_Lugg_LH	560079	female	VECT4	RearVehicle	563714	male
Sw110.A	1st_Lugg_RH	560079	female	Y80	Engine_Cmpt	563789	male
Sw110.B	1st_Lugg_RH	560079	female	Y81	Cond_Cmpt	563793	male
Sw111.A	2ndLuggCmpt.	560079	female				
Sw111.B	2ndLuggCmpt.	560079	female				
Sw112.A	2ndLuggCmpt.	560079	female				
Sw112.B	2ndLuggCmpt.	560079	female				
Sw113.A	2ndLuggCmpt.	560079	female				
Sw113.B	2ndLuggCmpt.	560079	female				
Sw114.A	3rd_Lugg_RH	560079	female				
Sw114.B	3rd_Lugg_RH	560079	female				
Sw115.A	Compr_Door	560079	female				
Sw115.B	Compr_Door	560079	female				
Sw122	ServiceCmpt.	562763	male				
Sw137	Dash	562763	male				
Sw156	LH_Console	562763	male				
Sw157	Dash	562763	male				
Sw158	Dash	562763	male				
SwSo1	FrontSlideOut	561552	female				
SwSo2	RearSlideOut	561552	female				
VECF1	FJB	563186	male				
VECF2	FJB	563183	male				
VECF3	FJB	563185	male				
VECF4	FJB	563182	male				
VECF9	FJB	563448	male				
VECF10	FJB	563181	male				
VECF11	FJB	563184	male				
VECF12	FJB	563187	male				
VECR1	RJB	563186	male				
VECR2	RJB	563183	male				
VECR3	RJB	563185	male				
VECR4	RJB	563182	male				
VECR9	RJB	563448	male				

CONNECTORS LIST

No	Location	Part #	Gender	No	Location	Part #	Gender
R167	RH_Console	564496	male	Se30	EngineCmpt.	562877	female
Res3	ParcelRack	563590	female	Se31	EngineCmpt.	562877	female
Res4	RH_Console	563590	female	Se32	Rear_Axle_Cmpt	562426	male
Res6	FJB	563590	female	Se33	Rear_Axle_Cmpt	562856	male
Res7	Dashboard	563590	female	Se34	Rear_Axle_Cmpt	562426	male
Res15	Engine_Cmpt	561782	male	Se35	Rear_Axle_Cmpt	562426	male
Res19	FJB	563590	female	Se36	Rear_Axle_Cmpt	562427	male
Res20	FJB	563590	female	Se37	Front_Axle_LH	641132	female
Res31	UreaCmpt.	562350	male	Se38	Front_Axle_RH	641132	female
Res32	UreaCmpt.	563764	female	Se39	Rear_Axle_LH	641132	female
Res46	Rr_Axle_Cmpt	563590	female	Se40	Rear_Axle_LH	641132	female
Res53.A	CondensorCmpt.	563590	female	Se45	ServiceCmpt.	563409	male
Res99	Dash	563590	female	Se46	RearAxleCmpt.	562348	female
RSO1_1	SlideOutPanel	564496	male	Se49	EngineCmpt.	561690	male
RSO1_2	SlideOutPanel	564496	male	Se51	DriverSeat	563589	male
RSO2_1	SlideOutPanel	564496	male	Se53	Service_Cmpt	563159	female
RSO2_2	SlideOutPanel	564496	male	Se54	Service_Cmpt	563159	female
Se2	FJB	561566	female	Se55	Service_Cmpt	563159	female
Se11.A	Cond_Cmpt	560082	female	Se56	WCLcompt.	562884	female
Se11.B	Cond_Cmpt	560082	female	Se60	Service_Cmpt	563409	male
Se11.C	Cond_Cmpt	560082	female	Se62	WCL_system	561690	male
Se13	Engine_Cmpt	562350	male	Se63	RearAxleCmpt.	641132	female
Se14.A	Driver_Area	561782	male	Se64	RearAxleCmpt.	641132	female
Se14.B	Driver_Area	561781	female	Se65	Dash	564042	female
Se15.A	EntraceDoor	560488	female	Se66	FrontAxleCmpt.	564039	female
Se15.B	EntraceDoor	560488	female	Se67	ServiceCmpt.	563159	female
Se15.C	EntraceDoor	560488	female	Se69	ServiceCmpt.	563159	female
Se16.A	EntraceDoor	562651	female	Se89	EngineCmpt	562350	male
Se16.B	EntraceDoor	562651	female	Se94	WCL_system	562877	female
Se17.A	EntraceDoor	562291	female	Se100	WCL_Upper_Door	562479	female
Se17.B	EntraceDoor	562291	female	SESO1	SlideOutPanel	563159	female
Se17.C	EntraceDoor	562291	female	SESO2_SESO3	Frontslideout	562479	female
Se18	ServiceCmpt.	561566	female	SESO5_SESO6	Rearslideout	562479	female
Se19_P	Service_Cmpt	563677	male	shell1_1617	Driver_Area	562471	male
Se19_S	Service_Cmpt	563677	male	So3	RHConsole	641385	male
Se20.	Front_Axle_Cmpt	562426	male	So7	Service_Cmpt	561566	female
Se21	Dash	561248	female	So8	ServiceCmpt.	641385	male
Se23	EngineCmpt.	563159	female	So9	EngineCmpt.	560016	female
Se23A	EngineCmpt.	563159	female	So11	Cond_Cmpt	561566	female
Se24	EngineCmpt.	563758	female	So13	Evap_Cmpt	563204	female
Se24A	EngineCmpt.	563758	female	So17	Service_Cmpt	562848	male
Se25	EvapCmpt.	561248	female	So21	Front_Axle_Cmpt	564046	female
Se29	Engine_Cmpt	561566	female	So22	Front_Axle_Cmpt	564046	female

CONNECTORS LIST

No	Location	Part #	Gender	No	Location	Part #	Gender
A1	RJB	563975	male	A81.JC	FJB	562957	male
A2	FJB	563984	male	A83	Parcelrack	565970	female
A3	Dash	562363	male	A96	FJB	564205	male
A4.A	Service_Cmpt	562428	female	A97	Dash	563226	male
A4.B	Service_Cmpt	561188	female	A97A	Dash	563226	male
A5	Service_Cmpt	562428	female	A97A	Dash	563613	female
A6	Engine_Cmpt	562427	male	A97B	Dash	563226	male
A7	Rear_Axle_Cmpt	563979	male	A97B	Dash	563613	female
A9.Cx1	FJB	564041	female	A99	FJB	564205	male
A9.Cx2	FJB	563678	male	A100	Front_Axle_Cmpt	563632	male
A9.Cx3	FJB	564037	female	A101	Rr_Axle_Cmpt	563632	male
A9.Cx4	FJB	564038	female	A102	Rr_Axle_Cmpt	563632	male
A14.A	Dash	562766	male	A103	Dash	562070	female
A14.B	Dash	562767	male	A106	FrontVehicle	565974	male
A14.C	Dash	562765	male	A114A	Dash	564252	male
A15	Dash	562464	male	A130	Driver_Area	563226	male
A18.J1	FJB	562794	male	A131.A	Engine_Cmpt	561782	male
A18.J2	FJB	562650	male	A131.B	Engine_Cmpt	561781	female
A24.A	RH_Console	561890	male	A137A	CondensorCmpt.	20429843	male
A24.B	RH_Console	561566	female	A138	Cond_Cmpt	563787	male
A24.C	RH_Console	561889	female	A139	Dash	564501	male
A27	Service_Cmpt	562929	male	AE41.J1	FJB	563679	male
A28	Service_Cmpt	562928	male	AE41.J2	FJB	564037	female
A30.A	Dash	561611	male	AE41.J3	FJB	564004	male
A30.C	Dash	561889	female	AE42.J1	FJB	563679	male
A31.J1	Dash	562780	male	AE42.J2	FJB	564037	female
A31.J2	Dash	562842	male	AE42.J3	FJB	564004	male
A31.J3	Dash	562464	male	AE43.J1	FJB	563679	male
A31.J4	Dash	562465	male	AE43.J2	FJB	564037	male
A31.J5	Dash	563071	male	AE43.J3	FJB	565957	male
A34.J	EngineCmpt.	568118	male	AE44.J1	FJB	563679	male
A34.K	EngineCmpt.	564270	male	AE44.J2	FJB	564037	female
A34.L	EngineCmpt.	564269	male	AE44.J3	FJB	565957	male
A36.JA	FJB	562767	male	AE45.J1	FJB	563679	male
A36.JB	FJB	562765	male	AE45.J2	FJB	564037	female
A36.JC	FJB	562957	male	AE45.J3	FJB	565957	male
A40.A	FJB	561668	male	AE46.J1	FJB	563679	male
A77	Parcelrack	564547	male	AE46.J2	FJB	564037	female
A78	Parcelrack	562583	female	AE46.J3	FJB	565957	male
A79	Parcelrack	562583	female	AE47.J1	RHConsole	563679	male
A80	Parcelrack	562479	female	AE47.J2	RHConsole	564037	female
A81.JA	FJB	562767	male	AE47.J3	RHConsole	565957	male
A81.JB	FJB	562765	male	AE48.J1	RHConsole	563679	male

CONNECTORS LIST

No	Location	Part #	Gender	No	Location	Part #	Gender
AE48.J2	RHConsole	564037	female	B96B	Engine_Cmpt	563823	male
AE48.J3	RHConsole	565957	male	B97	Engine_Cmpt	563816	male
AE49.J1	RJB	563679	male	B98	Engine_Cmpt	563817	male
AE49.J2	RJB	564037	male	B99	Engine_Cmpt	563815	male
AE49.J3	RJB	565957	male	B115A	EngineCmpt.	564226	male
AE50.J1	RJB	563679	male	B142C	CondensorCmpt.	563793	male
AE50.J2	RJB	564037	male	B310	EngineCmpt.	565967	male
AE50.J3	RJB	565957	male	C1	FJB	563589	male
AE51.J1	RJB	563679	male	C1	FJB	563590	female
AE51.J2	RJB	564037	female	C1S	FJB	563589	male
AE51.J3	RJB	565957	male	C1S	FJB	563590	female
AE52.J1	RJB	563679	male	C2	Service_Cmpt	563580	male
AE52.J2	RJB	564037	female	C2	Service_Cmpt	563581	female
AE52.J3	RJB	565957	male	C2A	FJB	563580	male
AE54.J1	EvaporatorCmpt.	563679	male	C2A	FJB	563581	female
AE54.J2	EvaporatorCmpt.	564037	female	C2B	FJB	564034	male
AE54.J3	EvaporatorCmpt.	565957	male	C2B	FJB	564035	female
AE55.J1	Dash	563679	male	C3_plug	RJB	563589	male
AE55.J2	Dash	564037	female	C3_socket	RJB	563590	female
AE55.J3	Dash	564004	male	C3S	RJB	563593	male
AE56.J1	Dash	563679	male	C3S	RJB	563590	female
AE56.J2	Dash	564037	male	C4	FJB	563580	male
AE56.J3	Dash	564004	male	C4	FJB	563581	female
AE57.J1	3rd_RH_Lugg_Cmpt	563679	male	C5	FJB	563589	male
AE57.J2	3rd_RH_Lugg_Cmpt	564037	male	C5	FJB	563590	female
AE57.J3	3rd_RH_Lugg_Cmpt	564004	male	C5S	FJB	563589	male
AE58.J1	SlideoutPanel	563679	male	C5S	FJB	563590	female
AE58.J2	SlideoutPanel	564037	male	C6	FJB	563582	male
AE58.J3	SlideoutPanel	565957	male	C6	FJB	563583	female
AE59.J1	SlideoutPanel	563679	male	C7	Service_Cmpt	562566	male
AE59.J2	SlideoutPanel	564037	male	C7	Service_Cmpt	562565	female
AE59.J3	SlideoutPanel	565957	male	C8	FJB	563227	male
AltLL.A	EngineCmpt.	563746	female	C8	FJB	563614	female
AltLL.B	EngineCmpt.	560815	female	C9	RJB	561986	male
AltLL.C	EngineCmpt.	564469	female	C9	RJB	561987	female
AltUL.A	EngineCmpt.	563746	female	C10	Engine_Cmpt	562477	male
AltUL.B	EngineCmpt.	560815	female	C10	Engine_Cmpt	562479	female
AltUL.C	EngineCmpt.	564469	female	C11	Service_Cmpt	563580	male
AltUR.A	EngineCmpt.	563746	female	C11	Service_Cmpt	563581	female
AltUR.B	EngineCmpt.	560815	female	C12	Engine_Cmpt	562581	male
AltUR.C	EngineCmpt.	564469	female	C12	Engine_Cmpt	562583	female
B85	Engine_Cmpt	563815	male	C13_plug	RH_Console	563589	male
B96	Engine_Cmpt	563821	male	C13_socket	RH_Console	563590	female

CONNECTORS LIST

No	Location	Part #	Gender	No	Location	Part #	Gender
C13S	RH_Console	563589	male	C49	FJB	561714	female
C13S	RH_Console	563590	female	C50	RJB	563226	male
C14	FrontVehicle	562581	male	C50	RJB	563613	female
C14	FrontVehicle	562583	female	C52	EvaporatorCmpt.	563618	male
C15A	Evap_Cmpt	568110	male	C52	EvaporatorCmpt.	563616	female
C15A	Evap_Cmpt	568109	female	C54	EngineCmpt.	563226	male
C17	RJB	560195	male	C54	EngineCmpt.	563613	female
C17	RJB	560169	female	C54A	EngineCmpt.	568110	male
C18	FJB	561986	male	C54A	EngineCmpt.	568109	female
C18	FJB	561987	female	C54B	EngineCmpt.	563589	male
C19	RJB	561986	male	C54B	EngineCmpt.	563590	female
C19	RJB	561987	female	C58	CondensorCmpt.	564567	male
C23	Evap_Cmpt	564034	male	C58	CondensorCmpt.	564568	female
C23	Evap_Cmpt	564035	female	C58A	CondensorCmpt.	564258	male
C24_plug	Evap_Cmpt	561690	male	C58A	CondensorCmpt.	566037	female
C24_socket	Evap_Cmpt	561566	female	C59	3rdLuggCmpt.	561643	male
C26	UreaCmpt.	563226	male	C59	3rdLuggCmpt.	561642	female
C26	UreaCmpt.	563613	female	C61	Fr_Service_Door	561669	male
C26A	UreaCmpt.	568110	male	C61	Fr_Service_Door	561670	female
C26A	UreaCmpt.	568109	female	C62	Fr_Service_Door	562566	male
C26B	UreaCmpt.	563227	male	C62	Fr_Service_Door	562565	female
C26B	UreaCmpt.	563614	female	C64	EngineCmpt.	568110	male
C29	WCL_System	563651	male	C64	EngineCmpt.	568109	female
C29	WCL_System	563652	female	C71	FJB	561646	male
C30	WCL_System	561710	male	C71	FJB	561645	female
C30	WCL_System	561709	female	C72	FJB	561646	male
C32W	3rd_RH_Lugg_Cmpt	561640	male	C72	FJB	561645	female
C32W	3rd_RH_Lugg_Cmpt	561639	female	C74	FJB	561645	female
C33	3rd_RH_Lugg_Cmpt	564034	male	C74	FJB	561646	male
C33	3rd_RH_Lugg_Cmpt	564035	female	C80	EvaporatorCmpt.	562477	male
C34	RH_Console	561986	male	C80	EvaporatorCmpt.	562479	female
C34	RH_Console	561987	female	C81	1st_Lugg_Cmpt	562477	male
C39A	EngineCmpt.	561782	male	C81	1st_Lugg_Cmpt	562479	female
C39A	EngineCmpt.	561781	female	C82	1st_Lugg_Cmpt	562477	male
C40	Dash	562485	male	C82	1st_Lugg_Cmpt	562479	female
C40	Dash	562486	female	C83	2nd_Lugg_Cmpt	562477	male
C44_plug	FJB	561577	male	C83	2nd_Lugg_Cmpt	562479	female
C44_socket	FJB	561605	female	C84	2nd_Lugg_Cmpt	562477	male
C45	FJB	561643	male	C84	2nd_Lugg_Cmpt	562479	female
C45	FJB	561642	female	C85	4rd_Lugg_Cmpt	562477	male
C46	WCL_System	562549	male	C85	4rd_Lugg_Cmpt	562479	female
C46	WCL_System	562550	female	C86	4rd_Lugg_Cmpt	563618	male
C49	FJB	562005	male	C86	4rd_Lugg_Cmpt	563616	female

CONNECTORS LIST

No	Location	Part #	Gender	No	Location	Part #	Gender
C87	EngineCmpt.	562485	male	C131A	EngineCmpt.	561781	female
C87	EngineCmpt.	562486	female	C131B	EngineCmpt.	561782	male
C88	3rd_RH_Lugg_Cmpt	563618	male	C131B	EngineCmpt.	561781	female
C88	3rd_RH_Lugg_Cmpt	563616	female	C132	RHConsol	561515	male
C89	CondensorCmpt.	562477	male	C132	RHConsol	561552	female
C89	CondensorCmpt.	562479	female	C133	Dash	561986	male
C91	RJB	562285	male	C133	Dash	561987	female
C91	RJB	562282	female	C133A		561986	male
C92A	EngineCmpt.	563226	male	C133A		561987	female
C92A	EngineCmpt.	563613	female	C134_plug		561577	male
C92C	EngineCmpt.	562581	male	C134_socket		561605	female
C92C	EngineCmpt.	562583	female	C152	Cond_Cmpt	561611	male
C94_plug	FJB	563589	male	C152	Cond_Cmpt	561610	female
C94_socket	FJB	563590	female	C158	CondensorCmpt.	562477	male
C96	FJB	561643	male	C158	CondensorCmpt.	562479	female
C96	FJB	561642	female	C159	CondensorCmpt.	566033	male
C97	FJB	561643	male	C159	CondensorCmpt.	566034	female
C97	FJB	561642	female	C170	LH_Console	561637	male
C100	EvaporatorCmpt.	562477	male	C170	LH_Console	561636	female
C100	EvaporatorCmpt.	562479	female	C171	LH_Console	561646	male
C100S	EvaporatorCmpt.	562477	male	C171	LH_Console	561645	female
C100S	EvaporatorCmpt.	562479	female	C172	LHConsole	561637	male
C101	Service_Cmpt	561690	male	C172	LHConsole	561635	female
C101	Service_Cmpt	561566	female	C193_plug	RJB	563589	male
C102A	ServiceCmpt.	563226	male	C193_socket	RJB	563590	female
C102A	ServiceCmpt.	563613	female	C194	FJB	563589	male
C104S_plug	3rdLuggCmpt.	563589	male	C194	FJB	563590	female
C104S_socket	3rdLuggCmpt.	563590	female	C195	Dash	563347	male
C105_plug	FJB	562581	male	C195	Dash	560489	female
C105_socket	FJB	562583	female	C222	FJB	562477	male
C106_plug	FJB	562581	male	C222	FJB	562479	female
C106_socket	FJB	562583	female	C223	FJB	563227	male
C110	PneumPanel	568110	male	C223	FJB	563614	female
C110	PneumPanel	568109	female	C224	FJB	561637	male
C114	3rd_RH_Lugg_Cmpt	561550	male	C224	FJB	561636	female
C114	3rd_RH_Lugg_Cmpt	561667	female	C225	FJB	562650	male
C119A	EngineDoor	568110	male	C225	FJB	562649	female
C119A	EngineDoor	568109	female	C226	FJB	562650	male
C121	EngineDoor	562566	male	C226	FJB	562649	female
C121	EngineDoor	562565	female	C228	EngineCmpt.	562477	male
C122	EngineDoor	562566	male	C228	EngineCmpt.	562479	female
C122	EngineDoor	562565	female	C242	ServiceCmpt.	562789	male
C131A	EngineCmpt.	561782	male	C242	ServiceCmpt.	565131	female

CONNECTORS LIST

No	Location	Part #	Gender	No	Location	Part #	Gender
C243.	ServiceCmpt.	562789	male	C606A		561566	female
C243.	ServiceCmpt.	565131	female	C606B		561690	male
C266	EntraceDoor	561640	male	C606B		561566	female
C266	EntraceDoor	561639	female	C607_plug	FJB	561577	male
C279	Service_Cmpt	562477	male	C607_socket	FJB	561605	female
C279	Service_Cmpt	562479	female	C607A		561577	male
C290	Rear_Vehicle	562477	male	C607A		561605	female
C290	Rear_Vehicle	562479	female	C607B		561577	male
C304	2ndLuggCmpt.	560852	male	C607B		561605	female
C304	2ndLuggCmpt.	560851	female	C617	Mirror_LH	563801	male
C305	2ndLuggCmpt.	560852	male	C617	Mirror_LH	563800	female
C305	2ndLuggCmpt.	560851	female	C618	Mirror_RH	563801	male
C380A	Dash	564222	male	C618	Mirror_RH	563800	female
C380A	Dash	564224	female	C_ALT	EngineCmpt.	562581	male
C397	RJB	562285	male	C_ALT	EngineCmpt.	562583	female
C397	RJB	562282	female	C_ALT3	EngineCmpt.	562477	male
C463	EngineCmpt.	568112	male	C_ALT3	EngineCmpt.	562479	female
C463	EngineCmpt.	568111	female	C_Mo9	Evap_Cmpt	561577	male
C464A	RJB	564222	male	C_Mo9	Evap_Cmpt	561605	female
C464A	RJB	564224	female	C_Se51	FJB	563589	male
C551	3rdLuggCmpt.	561476	male	C_Se51	FJB	563590	female
C551	3rdLuggCmpt.	561477	female	CCust	RJB	562477	male
C553	2ndLuggCmpt.	561476	male	CCust	RJB	562479	female
C553	2ndLuggCmpt.	561477	female	CF167	RH_Console	562350	male
C554	1stLuggCmpt.	561476	male	CF167	RH_Console	563764	female
C554	1stLuggCmpt.	561477	female	CInt1	FJB	563227	male
C555	1stLuggCmpt.	561476	male	CInt1	FJB	563614	female
C555	1stLuggCmpt.	561477	female	CInt2	FJB	563226	male
C556	3rdLuggCmpt.	561476	male	CInt2	FJB	563613	female
C556	3rdLuggCmpt.	561477	female	CSo1	SlideOutPanel	562581	male
C557	2ndLugg.Cmpt.	561476	male	CSo1	SlideOutPanel	562583	female
C557	2ndLuggCmpt.	561477	female	CSo2	SlideOutPanel	561643	male
C559	3rdLuggCmpt.	561476	male	CSo2	SlideOutPanel	561641	female
C559	3rdLuggCmpt.	561477	female	CSo5	SlideOutPanel	561847	male
C560	3rdLuggCmpt.	561476	male	CSo5	SlideOutPanel	561862	female
C560	3rdLuggCmpt.	561477	female	CSo7	SlideOutPanel	562581	male
C561	3rdLuggCmpt.	561476	male	CSo7	SlideOutPanel	562583	female
C561	3rdLuggCmpt.	561477	female	CT_In	Rear_Vehicle	563582	male
C562	3rdLuggCmpt.	561476	male	CT_In	Rear_Vehicle	563583	female
C562	3rdLuggCmpt.	561477	female	CT_Out	Rear_Vehicle	560478	female
C606_plug	FJB	561690	male	EI	EngineCmpt.	563739	male
C606_socket	FJB	561566	female	L1A	EngineCmpt.	562848	male
C606A		561690	male	L10	Dash	561247	male

CONNECTORS LIST

No	Location	Part #	Gender	No	Location	Part #	Gender
L16.A	FrontRoof	562615	female	L84.	RrRoof	562486	female
L16.B	FrontRoof	562615	female	L85.	RrRoof	562486	female
L17.A	FrontRoof	562615	female	L86.	RrRoof	562486	female
L17.B	FrontRoof	562615	female	L87.	RrRoof	562486	female
L18.A	EntraceDoor	561626	female	L88.	RrRoof	562486	female
L18.B	EntraceDoor	561626	female	L89.	RrRoof	562486	female
L21.	OutsideFront	560605	female	L90.	RrRoof	562486	female
L22.	OutsideFront	560605	female	L91A	RearVehiculeLH	562601	male
L23.	OutsideFront	560605	female	L92A	RearVehicleRH	562601	male
L24.	OutsideFront	560605	female	L93.B	RearOutsideLH	563069	female
L25.	OutsideFront	560605	female	L94.B	RearOutsideRH	563069	female
L26.	OutsideFront	560605	female	L95	Outside_Front_LH	562902	female
L27.	OutsideFront	560605	female	L96	Outside_Front_RH	562902	female
L59	OutsidefrontRH	562623	male	L97.B	Outside_Front_LH	563069	female
L59A	OutsideFrontRH	563366	male	L98.B	EntraceDoor	563069	female
L59B	OutsideFrontRH	562623	male	L120	DriverSeat	562237	female
L60	OutsideFrontLH	562623	male	L173	EngineCmpt.	563590	female
L60A	OutsideFrontLH	563366	male	L174A	EngineCmpt.	563590	female
L60B	OutsideFrontLH	562623	male	L176	3rd_Lugg_Cmpt	561247	male
L61	OutsideFrontRH	562601	male	L177	3rd_Lugg_Cmpt	561247	male
L62	OutsideFrontLH	562601	male	L178	4thLuggCmpt.	561247	male
L63	FrontSideRH	562155	male	L179	4thLuggCmpt.	561247	male
L64	OutsideFrontRH	562155	male	L180	2nd_Lugg_Cmpt	561247	male
L65	FrontSideLH	562155	male	L181	2nd_Lugg_Cmpt	561247	male
L66	OutsideFrontLH	562155	male	L182	1st_Lugg_Cmpt	561247	male
L67	3rdLuggCmpt.	562155	male	L183	1st_Lugg_Cmpt	561247	male
L68	3rdLuggCmpt.	562155	male	L184	ServiceCmpt.	561247	male
L69	EvapCmpt.	562155	male	L185.A	Dash	561539	male
L70	EvapCmpt.	562155	male	L185.B	Dash	561539	male
L71A	RearVehicleLH	562601	male	L186.A	Dash	561539	male
L72	Rear_VehicleLH	562155	male	L186.B	Dash	561539	male
L73A	RearVehicleRH	562601	male	L187	Engine_Cmpt	561690	male
L74	RearVehicleRH	562155	male	L193.A	Dash	560488	female
L75	RearVehicleLH	562155	male	L193.B	Dash	560488	female
L76	RearVehicleRH	562155	male	L194.A	Dash	562019	female
L77A	RearVehicleRH	562601	male	L194.B	Dash	560488	female
L78A	RearVehicleRH	562601	male	L195.A	Dash	560488	female
L79A	RearVehicleLH	562601	male	L195.B	Dash	560488	female
L80A	RearVehicleLH	562601	male	L199	EngineCmpt.	562848	male
L81.A	DPFDoor	562835	female	L203	RH_Console	561690	male
L81.B	DFPDoor	562834	male	L204	WCL_Upper_Door	562803	male
L82A	EngineDoor	562348	female	L205	EvapCmpt.	562485	male
L83A	EngineDoor	562348	female	L206	WCL_Upper_Door	562803	male

CONNECTORS LIST

No	Location	Part #	Gender	No	Location	Part #	Gender
L207.A	WCL_System	561699	female	Mo32	2ndLuggCmpt.LH	564161	male
L207.B	WCL_System	561701	female	Mo33	2ndLuggCmpt.RH	564161	male
L207.C	WCL_System	561701	female	Mo34	3rdLuggCmpt.LH	564161	male
L207.D	WCL_System	561699	female	Mo35	3rdLuggCmpt.RH	564161	male
L207.E	WCL_System	561701	female	Mo36	CompressorDoor	564161	male
L207.F	WCL_System	561699	female	Mo37	4thLuggCmpt.RH	564161	male
L207.G	WCL_System	561699	female	Mo38	4thLuggCmpt.LH	564161	male
L207.H	WCL_System	560926	female	Mo40	1stLuggCmpt.LH	561477	female
L207.I	WCL_System	560926	female	Mo41	2ndLuggCmpt.LH	561477	female
L282	Preheater_Cmpt	561690	male	Mo42	3rdLuggCmpt.LH	561477	female
L285.A	Rear_Vehicle	562835	female	Mo43	3rdLuggCmpt.LH	561477	female
L285.B	Rear_Vehicle	562834	male	Mo50	FrontAxleCmpt.	561690	male
L286.A	Rear_Vehicle	562835	female	Mo54	Service_Cmpt	562474	male
L286.B	Rear_Vehicle	562834	male	Mo55	EntraceDoor	563626	male
L298A	EngineCmpt.	563590	female	Mo65	EngineCmpt.	568089	male
L304	OutsideLuggDoorLH	562155	male	Mo67	EngineCmpt.	568089	male
L305	OutsideLuggDoorRH	562155	male	Mo68	EngineCmpt.	568089	male
L306	Radiator_Door	562155	male	Mo69	EngineCmpt.	568089	male
L307	Radiator_Door	562155	male	Mo70	EngineCmpt.	568089	male
L309	RJB	561247	male	Mo71	EngineCmpt.	568089	male
L350A.A	RearAxleCmpt.	564552	male	Mo72	EngineCmpt.	568089	male
L350A.B	RearAxleCmpt.	563340	male	Mo73	EngineCmpt.	568089	male
L350A.C	RearAxleCmpt.	562251	male	MoSO1	FrontSlideOut	562350	male
Mo3	Dash	561667	female	MoSO2	RearSlideOut	562350	male
Mo4		564161	male	PC1	CantrackCable	562650	male
Mo7	Cond_Cmpt	563691	male	PC1	CantrackCable	562649	female
Mo8	Cond_Cmpt	563691	male	Pot1.A	Dash	560488	female
Mo11	CondensorCmpt.	568089	male	Pot1.B	Dash	560488	female
Mo12	Engine_Cmpt	561690	male	Pot1.C	Dash	560488	female
Mo15.	FrCeling	563517	female	R1.A		562486	female
Mo16.	FrCeling	563517	female	R3	RJB	563409	male
Mo17	RH_Console	563626	male	R6	Dash	564496	male
Mo19	Fr_Service_Door	562474	male	R7	Dash	564496	male
Mo20	Fr_Service_Door	562474	male	R12	Evap_Cmpt	563409	male
Mo22	RH_Console	561186	male	R21	FJB	560525	male
Mo24	RH_Console	562348	female	R27	Dash	564496	male
Mo25	RH_Console	562348	female	R29	RJB	563409	male
Mo26	EntraceDoor	564161	male	R30	FJB	564496	male
Mo27	Cond_Cmpt	563691	male	R31	FJB	564496	male
Mo28	Cond_Cmpt	563691	male	R36	Dash	564496	male
Mo29	RJB	563590	female	R37	Dash	564496	male
Mo30	1stLuggCmpt.LH	564161	male	R38	FJB	564496	male
Mo31	1stLuggCmpt.RH	564161	male	R47	WCL_System	564496	male

CONNECTORS LIST

No	Location	Part #	Gender	No	Location	Part #	Gender
So23	Rear_Axle_Cmpt	564046	female	Sw35	LHConsole	562763	male
So24	Rear_Axle_Cmpt	564046	female	Sw38	LH_Console	562763	male
So27	RearAxleCmpt.	564045	female	Sw40	LH_Console	561690	male
So28	ServiceCmpt.	641385	male	Sw41	LH_Console	562749	male
So29	ServiceCmpt.	641385	male	Sw42	WCL_System	561636	female
So30	ServiceCmpt.	641385	male	Sw44.A	ServiceCmpt.	562403	female
So31	ServiceCmpt.	641385	male	Sw45.A	3rd_Lugg_Cmpt	562403	female
So32	ServiceCmpt.	641385	male	Sw45.B	3rdLuggCmpt.	562403	female
So36	EngineCmpt.	561690	male	Sw46.A	3rd_Lugg_Cmpt	562403	female
So50	RearAxleCmpt.	564046	female	Sw46.B	3rdLuggCmpt.	562403	female
So52	FrontAxleCmpt.	564045	female	Sw46A.A	3rd_RH_Lugg_Cmpt	562403	female
spBar4	EngineCmpt.	564135	male	Sw46A.B	3rd_RH_Lugg_Cmpt	562403	female
spBar5	EngineCmpt.	564135	male	Sw47.A	4thLuggCmpt.	562403	female
spBar6	EngineCmpt.	564135	male	Sw47.B	4thLuggCmpt.	562403	female
spBar7	CondCmpt.	564135	male	Sw48.A	4thLuggCmpt.	562403	female
spBar11	EngineCmpt.	564135	male	Sw48.B	4thLuggCmpt.	562403	female
spBar12	EngineCmpt.	564135	male	Sw49.A	2nd_Lugg_Cmpt	562403	female
spBar13	EngineCmpt.	564135	male	Sw49.B	2ndLuggCmpt.	562403	female
spBar14	EngineCmpt.	564135	male	Sw50.A	2nd_Lugg_Cmpt	562403	female
spBar15	EngineCmpt.	564135	male	Sw51.A	1st_Lugg_Cmpt	562403	female
spBar16	EngineCmpt.	564135	male	Sw52.A	1st_Lugg_Cmpt	562403	female
spBar19	CondCmpt.	564135	male	Sw58.A	EngineCmpt.	563135	male
spBar20	CondCmpt.	564135	male	Sw59	EngineCmpt.	563135	male
spBar21	CondCmpt.	564135	male	Sw63A	LHConsole	562763	male
spBar22	EngineCmpt.	564135	male	Sw64.A	ServiceCmpt.	560815	female
spBar23	EngineCmpt.	564135	male	Sw64.B	Ssp	560815	female
spBar24	EngineCmpt.	564135	male	Sw82	RJB	563135	male
spBar26	Rr_Axle_Cmpt	564135	male	Sw83.A	Dash	560082	female
spBar27	Rr_Axle_Cmpt	564135	male	Sw83.B	Dash	560815	female
Sw1.C258	Driver_Area	561188	female	Sw83.C	Dash	560082	female
Sw1.C259	Driver_Area	561186	male	Sw83.D	Dash	560815	female
Sw2	Dash	562763	male	Sw85	LH_Console	562749	male
Sw3	Dash	562763	male	Sw99	Dash	562763	male
Sw4	Dash	562763	male	Sw102	Dash	562763	male
Sw6	Dash	562763	male	Sw103A	LHConsole	562763	male
Sw14	Dash	562763	male	Sw104	Dash	562763	male
Sw16	Dash	562763	male	Sw107.A	LHConsole	561457	female
Sw17	Dash	562763	male	Sw107.B	LHConsole	561457	female
Sw18A	LH_Console	562763	male	Sw107.C	LHConsole	561457	female
Sw20	Dashboard	562763	male	Sw107.D	LHConsole	561457	female
Sw24	Dash	562763	male	Sw107.E	LHConsole	561457	female
Sw24A		562763	male	Sw107.F	LHConsole	561457	female
Sw34	Dash	562763	male	Sw107.G	LHConsole	561457	female

CONNECTORS LIST

No	Location	Part #	Gender	No	Location	Part #	Gender
Sw107.H	LHConsole	561457	female	VECR9	RJB	563448	male
Sw107.J	LHConsole	561457	female	VECR10	RJB	563181	male
Sw107.K	LHConsole	561457	female	VECR11	RJB	563184	male
Sw108	LHConsole	562763	male	VECR12	RJB	563187	male
Sw109.A	1st_Lugg_LH	560079	female	VECT2	Rear_Vehicle	563716	male
Sw109.B	1st_Lugg_LH	560079	female	VECT3	RearVehicle	563718	male
Sw110.A	1st_Lugg_RH	560079	female	VECT4	RearVehicle	563714	male
Sw110.B	1st_Lugg_RH	560079	female	Y80	Engine_Cmpt	563789	male
Sw111.A	2ndLuggCmpt.	560079	female	Y81	Cond_Cmpt	563793	male
Sw111.B	2ndLuggCmpt.	560079	female				
Sw112.A	2ndLuggCmpt.	560079	female				
Sw112.B	2ndLuggCmpt.	560079	female				
Sw113.A	2ndLuggCmpt.	560079	female				
Sw113.B	2ndLuggCmpt.	560079	female				
Sw114.A	3rd_Lugg_RH	560079	female				
Sw114.B	3rd_Lugg_RH	560079	female				
Sw115.A	Compr_Door	560079	female				
Sw115.B	Compr_Door	560079	female				
Sw122	ServiceCmpt.	562763	male				
Sw137	Dash	562763	male				
Sw156	LH_Console	562763	male				
Sw157	Dash	562763	male				
Sw158	Dash	562763	male				
Sw165		562763	male				
Sw165A		562763	male				
Sw166		562763	male				
Sw167		562763	male				
SwSo1	FrontSlideOut	561552	female				
SwSo2	RearSlideOut	561552	female				
Term106	RJB	{part_no564189}	N/A				
Term107	RJB	{part_no564189}	N/A				
VECF1	FJB	563186	male				
VECF2	FJB	563183	male				
VECF3	FJB	563185	male				
VECF4	FJB	563182	male				
VECF9	FJB	563448	male				
VECF10	FJB	563181	male				
VECF11	FJB	563184	male				
VECF12	FJB	563187	male				
VECR1	RJB	563186	male				
VECR2	RJB	563183	male				
VECR3	RJB	563185	male				
VECR4	RJB	563182	male				

CONNECTORS LIST

No	Location	Part #	Gender	No	Location	Part #	Gender
A1	RJB	563975	male	A81.JB	FJB	562765	male
A2	FJB	563984	male	A81.JC	FJB	562957	male
A3	Dash	562363	male	A83	Parcelrack	565970	female
A4.A	Service_Cmpt	562428	female	A96	FJB	564205	male
A4.B	Service_Cmpt	561188	female	A97	Dash	563226	male
A5	Service_Cmpt	562428	female	A97A	Dash	563226	male
A6	Engine_Cmpt	562427	male	A97A	Dash	563613	female
A7	Rear_Axle_Cmpt	563979	male	A97B	Dash	563226	male
A9.Cx1	FJB	564041	female	A97B	Dash	563613	female
A9.Cx2	FJB	563678	male	A99	FJB	564205	male
A9.Cx3	FJB	564037	female	A100	Front_Axle_Cmpt	563632	male
A9.Cx4	FJB	564038	female	A101	Rr_Axle_Cmpt	563632	male
A14.A	Dash	562766	male	A102	Rr_Axle_Cmpt	563632	male
A14.B	Dash	562767	male	A103	Dash	562070	female
A14.C	Dash	562765	male	A106	FrontVehicle	565974	male
A15	Dash	562464	male	A114A	Dash	564252	male
A18.J1	FJB	562794	male	A130	Driver_Area	563226	male
A18.J2	FJB	562650	male	A131.A	Engine_Cmpt	561782	male
A24.A	RH_Console	561890	male	A131.B	Engine_Cmpt	561781	female
A24.B	RH_Console	561566	female	A137A	CondensorCmpt.	20429843	male
A24.C	RH_Console	561889	female	A138	Cond_Cmpt	563787	male
A27	Service_Cmpt	562929	male	A139	Dash	564501	male
A28	Service_Cmpt	562928	male	AE41.J1	FJB	563679	male
A30.A	Dash	561611	male	AE41.J2	FJB	564037	female
A30.C	Dash	561889	female	AE41.J3	FJB	564004	male
A31.J1	Dash	562780	male	AE42.J1	FJB	563679	male
A31.J2	Dash	562842	male	AE42.J2	FJB	564037	female
A31.J3	Dash	562464	male	AE42.J3	FJB	564004	male
A31.J4	Dash	562465	male	AE43.J1	FJB	563679	male
A31.J5	Dash	563071	male	AE43.J2	FJB	564037	male
A34.J	EngineCmpt.	568118	male	AE43.J3	FJB	565957	male
A34.K	EngineCmpt.	564270	male	AE44.J1	FJB	563679	male
A34.L	EngineCmpt.	564269	male	AE44.J2	FJB	564037	female
A36.JA	FJB	562767	male	AE44.J3	FJB	565957	male
A36.JB	FJB	562765	male	AE45.J1	FJB	563679	male
A36.JC	FJB	562957	male	AE45.J2	FJB	564037	female
A40.A	FJB	561668	male	AE45.J3	FJB	565957	male
A77	Parcelrack	564547	male	AE46.J1	FJB	563679	male
A78	Parcelrack	562583	female	AE46.J2	FJB	564037	female
A79	Parcelrack	562583	female	AE46.J3	FJB	565957	male
A80	Parcelrack	562479	female	AE47.J1	RHConsole	563679	male
A81.JA	FJB	562767	male	AE47.J2	RHConsole	564037	female

CONNECTORS LIST

No	Location	Part #	Gender	No	Location	Part #	Gender
AE47.J3	RHConsole	565957	male	AltUR.C	EngineCmpt.	564469	female
AE48.J1	RHConsole	563679	male	B85	Engine_Cmpt	563815	male
AE48.J2	RHConsole	564037	female	B96	Engine_Cmpt	563821	male
AE48.J3	RHConsole	565957	male	B96B	Engine_Cmpt	563823	male
AE49.J1	RJB	563679	male	B97	Engine_Cmpt	563816	male
AE49.J2	RJB	564037	male	B98	Engine_Cmpt	563817	male
AE49.J3	RJB	565957	male	B99	Engine_Cmpt	563815	male
AE50.J1	RJB	563679	male	B115A	EngineCmpt.	564226	male
AE50.J2	RJB	564037	male	B142C	CondensorCmpt.	563793	male
AE50.J3	RJB	565957	male	B310	EngineCmpt.	565967	male
AE51.J1	RJB	563679	male	C1	FJB	563589	male
AE51.J2	RJB	564037	female	C1	FJB	563590	female
AE51.J3	RJB	565957	male	C1S	FJB	563589	male
AE52.J1	RJB	563679	male	C1S	FJB	563590	female
AE52.J2	RJB	564037	female	C2	Service_Cmpt	563580	male
AE52.J3	RJB	565957	male	C2	Service_Cmpt	563581	female
AE54.J1	EvaporatorCmpt.	563679	male	C2A	FJB	563580	male
AE54.J2	EvaporatorCmpt.	564037	female	C2A	FJB	563581	female
AE54.J3	EvaporatorCmpt.	565957	male	C2B	FJB	564034	male
AE55.J1	Dash	563679	male	C2B	FJB	564035	female
AE55.J2	Dash	564037	female	C3_plug	RJB	563589	male
AE55.J3	Dash	564004	male	C3_socket	RJB	563590	female
AE56.J1	Dash	563679	male	C3S	RJB	563593	male
AE56.J2	Dash	564037	male	C3S	RJB	563590	female
AE56.J3	Dash	564004	male	C4	FJB	563580	male
AE57.J1	3rd_RH_Lugg_Cmpt	563679	male	C4	FJB	563581	female
AE57.J2	3rd_RH_Lugg_Cmpt	564037	male	C5	FJB	563589	male
AE57.J3	3rd_RH_Lugg_Cmpt	564004	male	C5	FJB	563590	female
AE58.J1	SlideoutPanel	563679	male	C5S	FJB	563589	male
AE58.J2	SlideoutPanel	564037	male	C5S	FJB	563590	female
AE58.J3	SlideoutPanel	565957	male	C6	FJB	563582	male
AE59.J1	SlideoutPanel	563679	male	C6	FJB	563583	female
AE59.J2	SlideoutPanel	564037	male	C7	Service_Cmpt	562566	male
AE59.J3	SlideoutPanel	565957	male	C7	Service_Cmpt	562565	female
AltLL.A	EngineCmpt.	563746	female	C8	FJB	563227	male
AltLL.B	EngineCmpt.	560815	female	C8	FJB	563614	female
AltLL.C	EngineCmpt.	564469	female	C9	RJB	561986	male
AltUL.A	EngineCmpt.	563746	female	C9	RJB	561987	female
AltUL.B	EngineCmpt.	560815	female	C10	Engine_Cmpt	562477	male
AltUL.C	EngineCmpt.	564469	female	C10	Engine_Cmpt	562479	female
AltUR.A	EngineCmpt.	563746	female	C11	Service_Cmpt	563580	male
AltUR.B	EngineCmpt.	560815	female	C11	Service_Cmpt	563581	female

CONNECTORS LIST

No	Location	Part #	Gender	No	Location	Part #	Gender
C12	Engine_Cmpt	562581	male	C45	FJB	561642	female
C12	Engine_Cmpt	562583	female	C46	WCL_System	562549	male
C13_plug	RH_Console	563589	male	C46	WCL_System	562550	female
C13_socket	RH_Console	563590	female	C49	FJB	562005	male
C13S	RH_Console	563589	male	C49	FJB	561714	female
C13S	RH_Console	563590	female	C50	RJB	563931	male
C14	FrontVehicle	562581	male	C50	RJB	563930	female
C14	FrontVehicle	562583	female	C52	EvaporatorCmpt.	563618	male
C15A	Evap_Cmpt	568110	male	C52	EvaporatorCmpt.	563616	female
C15A	Evap_Cmpt	568109	female	C54	EngineCmpt.	563226	male
C17	RJB	560195	male	C54	EngineCmpt.	563613	female
C17	RJB	560169	female	C54A	EngineCmpt.	568110	male
C18	FJB	561986	male	C54A	EngineCmpt.	568109	female
C18	FJB	561987	female	C54B	EngineCmpt.	563589	male
C19	RJB	561986	male	C54B	EngineCmpt.	563590	female
C19	RJB	561987	female	C58	CondensorCmpt.	564567	male
C23	Evap_Cmpt	564034	male	C58	CondensorCmpt.	564568	female
C23	Evap_Cmpt	564035	female	C58A	CondensorCmpt.	564258	male
C24_plug	Evap_Cmpt	561690	male	C58A	CondensorCmpt.	566037	female
C24_socket	Evap_Cmpt	561566	female	C59	3rdLuggCmpt.	561643	male
C26	UreaCmpt.	563226	male	C59	3rdLuggCmpt.	561642	female
C26	UreaCmpt.	563613	female	C61	Fr_Service_Door	561669	male
C26A	UreaCmpt.	568110	male	C61	Fr_Service_Door	561670	female
C26A	UreaCmpt.	568109	female	C62	Fr_Service_Door	562566	male
C26B	UreaCmpt.	563227	male	C62	Fr_Service_Door	562565	female
C26B	UreaCmpt.	563614	female	C64	EngineCmpt.	568110	male
C29	WCL_System	563651	male	C64	EngineCmpt.	568109	female
C29	WCL_System	563652	female	C71	FJB	561646	male
C30	WCL_System	561710	male	C71	FJB	561645	female
C30	WCL_System	561709	female	C72	FJB	561646	male
C32W	3rd_RH_Lugg_Cmpt	561640	male	C72	FJB	561645	female
C32W	3rd_RH_Lugg_Cmpt	561639	female	C74	FJB	561645	female
C33	3rd_RH_Lugg_Cmpt	564034	male	C74	FJB	561646	male
C33	3rd_RH_Lugg_Cmpt	564035	female	C80	EvaporatorCmpt.	562477	male
C34	RH_Console	561986	male	C80	EvaporatorCmpt.	562479	female
C34	RH_Console	561987	female	C81	1st_Lugg_Cmpt	562477	male
C39A	EngineCmpt.	561782	male	C81	1st_Lugg_Cmpt	562479	female
C39A	EngineCmpt.	561781	female	C82	1st_Lugg_Cmpt	562477	male
C40	Dash	562485	male	C82	1st_Lugg_Cmpt	562479	female
C40	Dash	562486	female	C83	2nd_Lugg_Cmpt	562477	male
C44_plug	FJB	561577	male	C83	2nd_Lugg_Cmpt	562479	female
C44_socket	FJB	561605	female	C84	2nd_Lugg_Cmpt	562477	male
C45	FJB	561643	male	C84	2nd_Lugg_Cmpt	562479	female

CONNECTORS LIST

No	Location	Part #	Gender	No	Location	Part #	Gender
C85	4rd_Lugg_Cmpt	562477	male	C121	EngineDoor	562565	female
C85	4rd_Lugg_Cmpt	562479	female	C122	EngineDoor	562566	male
C86	4rd_Lugg_Cmpt	563618	male	C122	EngineDoor	562565	female
C86	4rd_Lugg_Cmpt	563616	female	C131A	EngineCmpt.	561782	male
C87	EngineCmpt.	562485	male	C131A	EngineCmpt.	561781	female
C87	EngineCmpt.	562486	female	C131B	EngineCmpt.	561782	male
C88	3rd_RH_Lugg_Cmpt	563618	male	C131B	EngineCmpt.	561781	female
C88	3rd_RH_Lugg_Cmpt	563616	female	C132	RHConsol	561515	male
C89	CondensorCmpt.	562477	male	C132	RHConsol	561552	female
C89	CondensorCmpt.	562479	female	C133	Dash	561986	male
C91	RJB	562285	male	C133	Dash	561987	female
C91	RJB	562282	female	C133A	RH Console	561986	male
C92A	EngineCmpt.	563226	male	C133A	RH Console	561987	female
C92A	EngineCmpt.	563613	female	C134_plug	Dash	561577	male
C92C	EngineCmpt.	562581	male	C134_socket	Dash	561605	female
C92C	EngineCmpt.	562583	female	C152	Cond_Cmpt	561611	male
C94_plug	FJB	563589	male	C152	Cond_Cmpt	561610	female
C94_socket	FJB	563590	female	C158	CondensorCmpt.	562477	male
C96	FJB	561643	male	C158	CondensorCmpt.	562479	female
C96	FJB	561642	female	C159	CondensorCmpt.	566033	male
C97	FJB	561643	male	C159	CondensorCmpt.	566034	female
C97	FJB	561642	female	C170	LH_Console	561637	male
C100	EvaporatorCmpt.	562477	male	C170	LH_Console	561636	female
C100	EvaporatorCmpt.	562479	female	C171	LH_Console	561646	male
C100S	EvaporatorCmpt.	562477	male	C171	LH_Console	561645	female
C100S	EvaporatorCmpt.	562479	female	C172	LHConsole	561637	male
C101	Service_Cmpt	561690	male	C172	LHConsole	561635	female
C101	Service_Cmpt	561566	female	C193_plug	RJB	563589	male
C102A	ServiceCmpt.	563226	male	C193_socket	RJB	563590	female
C102A	ServiceCmpt.	563613	female	C194	FJB	563589	male
C104S_plug	3rdLuggCmpt.	563589	male	C194	FJB	563590	female
C104S_socket	3rdLuggCmpt.	563590	female	C195	Dash	563347	male
C105_plug	FJB	562581	male	C195	Dash	560489	female
C105_socket	FJB	562583	female	C222	FJB	562477	male
C106_plug	FJB	562581	male	C222	FJB	562479	female
C106_socket	FJB	562583	female	C223	FJB	563227	male
C110	PneumPanel	568110	male	C223	FJB	563614	female
C110	PneumPanel	568109	female	C224	FJB	561637	male
C114	3rd_RH_Lugg_Cmpt	561550	male	C224	FJB	561636	female
C114	3rd_RH_Lugg_Cmpt	561667	female	C225	FJB	562650	male
C119A	EngineDoor	568110	male	C225	FJB	562649	female
C119A	EngineDoor	568109	female	C226	FJB	562650	male
C121	EngineDoor	562566	male	C226	FJB	562649	female

CONNECTORS LIST

No	Location	Part #	Gender	No	Location	Part #	Gender
C228	EngineCmpt.	562477	male	C562	3rdLuggCmpt.	561477	female
C228	EngineCmpt.	562479	female	C606_plug	FJB	561690	male
C242	ServiceCmpt.	562789	male	C606_socket	FJB	561566	female
C242	ServiceCmpt.	565131	female	C606A		561690	male
C243.	ServiceCmpt.	562789	male	C606A		561566	female
C243.	ServiceCmpt.	565131	female	C606B		561690	male
C266	EntraceDoor	561640	male	C606B		561566	female
C266	EntraceDoor	561639	female	C607_plug	FJB	561577	male
C279	Service_Cmpt	562477	male	C607_socket	FJB	561605	female
C279	Service_Cmpt	562479	female	C607A	FJB	561577	male
C290	Rear_Vehicle	562477	male	C607A	FJB	561605	female
C290	Rear_Vehicle	562479	female	C607B	FJB	561577	male
C304	2ndLuggCmpt.	560852	male	C607B	FJB	561605	female
C304	2ndLuggCmpt.	560851	female	C617	Mirror_LH	563801	male
C305	2ndLuggCmpt.	560852	male	C617	Mirror_LH	563800	female
C305	2ndLuggCmpt.	560851	female	C618	Mirror_RH	563801	male
C380A	Dash	564222	male	C618	Mirror_RH	563800	female
C380A	Dash	564224	female	C_ALT	EngineCmpt.	562581	male
C397	RJB	562285	male	C_ALT	EngineCmpt.	562583	female
C397	RJB	562282	female	C_ALT3	EngineCmpt.	562477	male
C463	EngineCmpt.	568112	male	C_ALT3	EngineCmpt.	562479	female
C463	EngineCmpt.	568111	female	C_Mo9	Evap_Cmpt	561577	male
C464A	RJB	564222	male	C_Mo9	Evap_Cmpt	561605	female
C464A	RJB	564224	female	C_Se51	FJB	563589	male
C551	3rdLuggCmpt.	561476	male	C_Se51	FJB	563590	female
C551	3rdLuggCmpt.	561477	female	CCust	RJB	562477	male
C553	2ndLuggCmpt.	561476	male	CCust	RJB	562479	female
C553	2ndLuggCmpt.	561477	female	CF167	RH_Console	562350	male
C554	1stLuggCmpt.	561476	male	CF167	RH_Console	563764	female
C554	1stLuggCmpt.	561477	female	CInt1	FJB	563227	male
C555	1stLuggCmpt.	561476	male	CInt1	FJB	563614	female
C555	1stLuggCmpt.	561477	female	CInt2	FJB	563226	male
C556	3rdLuggCmpt.	561476	male	CInt2	FJB	563613	female
C556	3rdLuggCmpt.	561477	female	CSo1	SlideOutPanel	562581	male
C557	2ndLugg.Cmpt.	561476	male	CSo1	SlideOutPanel	562583	female
C557	2ndLuggCmpt.	561477	female	CSo2	SlideOutPanel	561643	male
C559	3rdLuggCmpt.	561476	male	CSo2	SlideOutPanel	561641	female
C559	3rdLuggCmpt.	561477	female	CSo5	SlideOutPanel	561847	male
C560	3rdLuggCmpt.	561476	male	CSo5	SlideOutPanel	561862	female
C560	3rdLuggCmpt.	561477	female	CSo7	SlideOutPanel	562581	male
C561	3rdLuggCmpt.	561476	male	CSo7	SlideOutPanel	562583	female
C561	3rdLuggCmpt.	561477	female	CT_In	Rear_Vehicle	563582	male
C562	3rdLuggCmpt.	561476	male	CT_In	Rear_Vehicle	563583	female

CONNECTORS LIST

No	Location	Part #	Gender	No	Location	Part #	Gender
CT_Out	Rear_Vehicle	560478	female	L81.A	DPFDoor	562835	female
EI	EngineCmpt.	563739	male	L81.B	DFPDoor	562834	male
L1A	EngineCmpt.	562848	male	L82A	EngineDoor	562348	female
L10	Dash	561247	male	L83A	EngineDoor	562348	female
L16.A	FrontRoof	562615	female	L84.	RrRoof	562486	female
L16.B	FrontRoof	562615	female	L85.	RrRoof	562486	female
L17.A	FrontRoof	562615	female	L86.	RrRoof	562486	female
L17.B	FrontRoof	562615	female	L87.	RrRoof	562486	female
L18.A	EntraceDoor	561626	female	L88.	RrRoof	562486	female
L18.B	EntraceDoor	561626	female	L89.	RrRoof	562486	female
L21.	OutsideFront	560605	female	L90.	RrRoof	562486	female
L22.	OutsideFront	560605	female	L91A	RearVehiculeLH	562601	male
L23.	OutsideFront	560605	female	L92A	RearVehicleRH	562601	male
L24.	OutsideFront	560605	female	L93.A	RearOutsideLH	563069	female
L25.	OutsideFront	560605	female	L93.B	RearOutsideLH	563069	female
L26.	OutsideFront	560605	female	L94.A	RearOutsideRH	563069	female
L27.	OutsideFront	560605	female	L94.B	RearOutsideRH	563069	female
L59	OutsidefrontRH	562623	male	L95	Outside_Front_LH	562902	female
L59A	OutsideFrontRH	563366	male	L96	Outside_Front_RH	562902	female
L59B	OutsideFrontRH	562623	male	L97.A	Outside_Front_LH	563069	female
L60	OutsideFrontLH	562623	male	L97.B	Outside_Front_LH	563069	female
L60A	OutsideFrontLH	563366	male	L98.A	EntraceDoor	563069	female
L60B	OutsideFrontLH	562623	male	L98.B	EntraceDoor	563069	female
L61	OutsideFrontRH	562601	male	L120	DriverSeat	562237	female
L62	OutsideFrontLH	562601	male	L173	EngineCmpt.	563590	female
L63	FrontSideRH	562155	male	L174A	EngineCmpt.	563590	female
L64	OutsideFrontRH	562155	male	L176	3rd_Lugg_Cmpt	561247	male
L65	FrontSideLH	562155	male	L177	3rd_Lugg_Cmpt	561247	male
L66	OutsideFrontLH	562155	male	L178	4thLuggCmpt.	561247	male
L67	3rdLuggCmpt.	562155	male	L179	4thLuggCmpt.	561247	male
L68	3rdLuggCmpt.	562155	male	L180	2nd_Lugg_Cmpt	561247	male
L69	EvapCmpt.	562155	male	L181	2nd_Lugg_Cmpt	561247	male
L70	EvapCmpt.	562155	male	L182	1st_Lugg_Cmpt	561247	male
L71A	RearVehicleLH	562601	male	L183	1st_Lugg_Cmpt	561247	male
L72	Rear_VehicleLH	562155	male	L184	ServiceCmpt.	561247	male
L73A	RearVehicleRH	562601	male	L185.A	Dash	561539	male
L74	RearVehicleRH	562155	male	L185.B	Dash	561539	male
L75	RearVehicleLH	562155	male	L186.A	Dash	561539	male
L76	RearVehicleRH	562155	male	L186.B	Dash	561539	male
L77A	RearVehicleRH	562601	male	L187	Engine_Cmpt	561690	male
L78A	RearVehicleRH	562601	male	L193.A	Dash	560488	female
L79A	RearVehicleLH	562601	male	L193.B	Dash	560488	female
L80A	RearVehicleLH	562601	male	L194.A	Dash	562019	female

CONNECTORS LIST

No	Location	Part #	Gender	No	Location	Part #	Gender
L194.B	Dash	560488	female	Mo24	RH_Console	562348	female
L195.A	Dash	560488	female	Mo25	RH_Console	562348	female
L195.B	Dash	560488	female	Mo26	EntraceDoor	564161	male
L199	EngineCmpt.	562848	male	Mo27	Cond_Cmpt	563691	male
L203	RH_Console	561690	male	Mo28	Cond_Cmpt	563691	male
L204	WCL_Upper_Door	562803	male	Mo29	RJB	563590	female
L205	EvapCmpt.	562485	male	Mo30	1stLuggCmpt.LH	564161	male
L206	WCL_Upper_Door	562803	male	Mo31	1stLuggCmpt.RH	564161	male
L207.A	WCL_System	561699	female	Mo32	2ndLuggCmpt.LH	564161	male
L207.B	WCL_System	561701	female	Mo33	2ndLuggCmpt.RH	564161	male
L207.C	WCL_System	561701	female	Mo34	3rdLuggCmpt.LH	564161	male
L207.D	WCL_System	561699	female	Mo35	3rdLuggCmpt.RH	564161	male
L207.E	WCL_System	561701	female	Mo36	CompressorDoor	564161	male
L207.F	WCL_System	561699	female	Mo37	4thLuggCmpt.RH	564161	male
L207.G	WCL_System	561699	female	Mo38	4thLuggCmpt.LH	564161	male
L207.H	WCL_System	560926	female	Mo40	1stLuggCmpt.LH	561477	female
L207.I	WCL_System	560926	female	Mo41	2ndLuggCmpt.LH	561477	female
L282	Preheater_Cmpt	561690	male	Mo42	3rdLuggCmpt.LH	561477	female
L285.A	Rear_Vehicle	562835	female	Mo43	3rdLuggCmpt.LH	561477	female
L285.B	Rear_Vehicle	562834	male	Mo50	FrontAxleCmpt.	561690	male
L286.A	Rear_Vehicle	562835	female	Mo54	Service_Cmpt	562474	male
L286.B	Rear_Vehicle	562834	male	Mo55	EntraceDoor	563626	male
L298A	EngineCmpt.	563590	female	Mo65	EngineCmpt.	568089	male
L304	OutsideLuggDoorLH	562155	male	Mo67	EngineCmpt.	568089	male
L305	OutsideLuggDoorRH	562155	male	Mo68	EngineCmpt.	568089	male
L306	Radiator_Door	562155	male	Mo69	EngineCmpt.	568089	male
L307	Radiator_Door	562155	male	Mo70	EngineCmpt.	568089	male
L309	RJB	561247	male	Mo71	EngineCmpt.	568089	male
L350A.A	RearAxleCmpt.	564552	male	Mo72	EngineCmpt.	568089	male
L350A.B	RearAxleCmpt.	563340	male	Mo73	EngineCmpt.	568089	male
L350A.C	RearAxleCmpt.	562251	male	MoSO1	FrontSlideOut	562350	male
Mo3	Dash	561667	female	MoSO2	RearSlideOut	562350	male
Mo4	Dash	564161	male	PC1	CantrackCable	562650	male
Mo7	Cond_Cmpt	563691	male	PC1	CantrackCable	562649	female
Mo8	Cond_Cmpt	563691	male	R1.A	RJB	562486	female
Mo11	CondensorCmpt.	568089	male	R3	RJB	563409	male
Mo12	Engine_Cmpt	561690	male	R6	Dash	564496	male
Mo15.	FrCeling	563517	female	R7	Dash	564496	male
Mo16.	FrCeling	563517	female	R12	Evap_Cmpt	563409	male
Mo17	RH_Console	563626	male	R21	FJB	560525	male
Mo19	Fr_Service_Door	562474	male	R27	Dash	564496	male
Mo20	Fr_Service_Door	562474	male	R29	RJB	563409	male
Mo22	RH_Console	561186	male	R30	FJB	564496	male

CONNECTORS LIST

No	Location	Part #	Gender	No	Location	Part #	Gender
R31	FJB	564496	male	Se23A	EngineCmpt.	563159	female
R36	Dash	564496	male	Se24	EngineCmpt.	563758	female
R37	Dash	564496	male	Se24A	EngineCmpt.	563758	female
R38	FJB	564496	male	Se25	EvapCmpt.	561248	female
R47	WCL_System	564496	male	Se29	Engine_Cmpt	561566	female
R167	RH_Console	564496	male	Se30	EngineCmpt.	562877	female
Res3	ParcelRack	563590	female	Se31	EngineCmpt.	562877	female
Res4	RH_Console	563590	female	Se32	Rear_Axle_Cmpt	562426	male
Res6	FJB	563590	female	Se33	Rear_Axle_Cmpt	562856	male
Res7	Dashboard	563590	female	Se34	Rear_Axle_Cmpt	562426	male
Res15	Engine_Cmpt	561782	male	Se35	Rear_Axle_Cmpt	562426	male
Res19	FJB	563590	female	Se36	Rear_Axle_Cmpt	562427	male
Res20	FJB	563590	female	Se37	Front_Axle_LH	641132	female
Res31	UreaCmpt.	562350	male	Se38	Front_Axle_RH	641132	female
Res32	UreaCmpt.	563764	female	Se39	Rear_Axle_LH	641132	female
Res46	Rear_Axle	563590	female	Se40	Rear_Axle_LH	641132	female
Res53.A	CondensorCmpt.	563590	female	Se45	ServiceCmpt.	563409	male
Res99	Dash	563590	female	Se46	RearAxleCmpt.	562348	female
RSO1_1	SlideOutPanel	564496	male	Se49	EngineCmpt.	561690	male
RSO1_2	SlideOutPanel	564496	male	Se51	DriverSeat	563589	male
RSO2_1	SlideOutPanel	564496	male	Se53	Service_Cmpt	563159	female
RSO2_2	SlideOutPanel	564496	male	Se54	Service_Cmpt	563159	female
Se2	FJB	561566	female	Se55	Service_Cmpt	563159	female
Se11.A	Cond_Cmpt	560082	female	Se56	WCLcompt.	562884	female
Se11.B	Cond_Cmpt	560082	female	Se60	Service_Cmpt	563409	male
Se11.C	Cond_Cmpt	560082	female	Se62	WCL_system	561690	male
Se13	Engine_Cmpt	562350	male	Se63	RearAxleCmpt.	641132	female
Se14.A	Driver_Area	561782	male	Se64	RearAxleCmpt.	641132	female
Se14.B	Driver_Area	561781	female	Se65	Dash	564042	female
Se15.A	EntraceDoor	560488	female	Se66	FrontAxleCmpt.	564039	female
Se15.B	EntraceDoor	560488	female	Se67	ServiceCmpt.	563159	female
Se15.C	EntraceDoor	560488	female	Se69	ServiceCmpt.	563159	female
Se16.A	EntraceDoor	562651	female	Se89	EngineCmpt	562350	male
Se16.B	EntraceDoor	562651	female	Se94	WCL_system	562877	female
Se17.A	EntraceDoor	562291	female	Se100	WCL_Upper_Door	562479	female
Se17.B	EntraceDoor	562291	female	SESO1	SlideOutPanel	563159	female
Se17.C	EntraceDoor	562291	female	SESO2_SESO3	Frontslideout	562479	female
Se18	ServiceCmpt.	561566	female	SESO5_SESO6	Rearslideout	562479	female
Se19_P	Service_Cmpt	563677	male	shell1_1617	Driver_Area	562471	male
Se19_S	Service_Cmpt	563677	male	So3	RHConsole	641385	male
Se20.	Front_Axle_Cmpt	562426	male	So7	Service_Cmpt	561566	female
Se21	Dash	561248	female	So8	ServiceCmpt.	641385	male
Se23	EngineCmpt.	563159	female	So9	EngineCmpt.	560016	female

CONNECTORS LIST

No	Location	Part #	Gender	No	Location	Part #	Gender
So11	Cond_Cmpt	561566	female	Sw18A	LH_Console	562763	male
So13	Evap_Cmpt	563204	female	Sw20	Dashboard	562763	male
So17	Service_Cmpt	562848	male	Sw24	Dash	562763	male
So21	Front_Axle_Cmpt	564046	female	Sw24A	Dash	562763	male
So22	Front_Axle_Cmpt	564046	female	Sw34	Dash	562763	male
So23	Rear_Axle_Cmpt	564046	female	Sw35	LHConsole	562763	male
So24	Rear_Axle_Cmpt	564046	female	Sw38	LH_Console	562763	male
So27	RearAxleCmpt.	564045	female	Sw40	LH_Console	561690	male
So28	ServiceCmpt.	641385	male	Sw41	LH_Console	562749	male
So29	ServiceCmpt.	641385	male	Sw42	WCL_System	561636	female
So30	ServiceCmpt.	641385	male	Sw44.A	ServiceCmpt.	562403	female
So31	ServiceCmpt.	641385	male	Sw45.A	3rd_Lugg_Cmpt	562403	female
So32	ServiceCmpt.	641385	male	Sw45.B	3rdLuggCmpt.	562403	female
So36	EngineCmpt.	561690	male	Sw46.A	3rd_Lugg_Cmpt	562403	female
So50	RearAxleCmpt.	564046	female	Sw46.B	3rdLuggCmpt.	562403	female
So52	FrontAxleCmpt.	564045	female	Sw46A.A	3rd_RH_Lugg_Cmpt	562403	female
spBar4	EngineCmpt.	564135	male	Sw46A.B	3rd_RH_Lugg_Cmpt	562403	female
spBar5	EngineCmpt.	564135	male	Sw47.A	4thLuggCmpt.	562403	female
spBar6	EngineCmpt.	564135	male	Sw47.B	4thLuggCmpt.	562403	female
spBar7	CondCmpt.	564135	male	Sw48.A	4thLuggCmpt.	562403	female
spBar11	EngineCmpt.	564135	male	Sw48.B	4thLuggCmpt.	562403	female
spBar12	EngineCmpt.	564135	male	Sw49.A	2nd_Lugg_Cmpt	562403	female
spBar13	EngineCmpt.	564135	male	Sw49.B	2ndLuggCmpt.	562403	female
spBar14	EngineCmpt.	564135	male	Sw50.A	2nd_Lugg_Cmpt	562403	female
spBar15	EngineCmpt.	564135	male	Sw51.A	1st_Lugg_Cmpt	562403	female
spBar16	EngineCmpt.	564135	male	Sw52.A	1st_Lugg_Cmpt	562403	female
spBar19	CondCmpt.	564135	male	Sw58.A	EngineCmpt.	563135	male
spBar20	CondCmpt.	564135	male	Sw59	EngineCmpt.	563135	male
spBar21	CondCmpt.	564135	male	Sw63A	LHConsole	562763	male
spBar22	EngineCmpt.	564135	male	Sw64.A	ServiceCmpt.	560815	female
spBar23	EngineCmpt.	564135	male	Sw64.B	Ssp	560815	female
spBar24	EngineCmpt.	564135	male	Sw82	RJB	563135	male
spBar26	Rr_Axle_Cmpt	564135	male	Sw83.A	Dash	560082	female
spBar27	Rr_Axle_Cmpt	564135	male	Sw83.B	Dash	560815	female
Sw1.C258	Driver_Area	561188	female	Sw83.C	Dash	560082	female
Sw1.C259	Driver_Area	561186	male	Sw83.D	Dash	560815	female
Sw2	Dash	562763	male	Sw85	LH_Console	562749	male
Sw3	Dash	562763	male	Sw99	Dash	562763	male
Sw4	Dash	562763	male	Sw102	Dash	562763	male
Sw6	Dash	562763	male	Sw103A	LHConsole	562763	male
Sw14	Dash	562763	male	Sw104	Dash	562763	male
Sw16	Dash	562763	male	Sw107.A	LHConsole	561457	female
Sw17	Dash	562763	male	Sw107.B	LHConsole	561457	female

CONNECTORS LIST

No	Location	Part #	Gender	No	Location	Part #	Gender
Sw107.C	LHConsole	561457	female	VECR4	RJB	563182	male
Sw107.D	LHConsole	561457	female	VECR9	RJB	563448	male
Sw107.E	LHConsole	561457	female	VECR10	RJB	563181	male
Sw107.F	LHConsole	561457	female	VECR11	RJB	563184	male
Sw107.G	LHConsole	561457	female	VECR12	RJB	563187	male
Sw107.H	LHConsole	561457	female	VECT2	Rear_Vehicle	563716	male
Sw107.J	LHConsole	561457	female	VECT3	RearVehicle	563718	male
Sw107.K	LHConsole	561457	female	VECT4	RearVehicle	563714	male
Sw108	LHConsole	562763	male	Y80	Engine_Cmpt	563789	male
Sw109.A	1st_Lugg_LH	560079	female	Y81	Cond_Cmpt	563793	male
Sw109.B	1st_Lugg_LH	560079	female				
Sw110.A	1st_Lugg_RH	560079	female				
Sw110.B	1st_Lugg_RH	560079	female				
Sw111.A	2ndLuggCmpt.	560079	female				
Sw111.B	2ndLuggCmpt.	560079	female				
Sw112.A	2ndLuggCmpt.	560079	female				
Sw112.B	2ndLuggCmpt.	560079	female				
Sw113.A	2ndLuggCmpt.	560079	female				
Sw113.B	2ndLuggCmpt.	560079	female				
Sw114.A	3rd_Lugg_RH	560079	female				
Sw114.B	3rd_Lugg_RH	560079	female				
Sw115.A	Compr_Door	560079	female				
Sw115.B	Compr_Door	560079	female				
Sw122	ServiceCmpt.	562763	male				
Sw137	Dash	562763	male				
Sw156	LH_Console	562763	male				
Sw157	Dash	562763	male				
Sw158	Dash	562763	male				
SwSo1	FrontSlideOut	561552	female				
SwSo2	RearSlideOut	561552	female				
Term106	RJB	{part_no564189}	N/A				
Term107	RJB	{part_no564189}	N/A				
VECF1	FJB	563186	male				
VECF2	FJB	563183	male				
VECF3	FJB	563185	male				
VECF4	FJB	563182	male				
VECF9	FJB	563448	male				
VECF10	FJB	563181	male				
VECF11	FJB	563184	male				
VECF12	FJB	563187	male				
VECR1	RJB	563186	male				
VECR2	RJB	563183	male				
VECR3	RJB	563185	male				

CONNECTORS LIST

No	Location	Part #	Gender	No	Location	Part #	Gender
A1	RJB	563975	male	A81CN3A	FJB	564741	male
A2	FJB	563984	male	A81CN3B	FJB	564742	male
A3	Dash	562363	male	A83	Parcelrack	565970	female
A4.A	Service_Cmpt	562428	female	A96	FJB	564205	male
A4.B	Service_Cmpt	561188	female	A97	Dash	563226	male
A5	Service_Cmpt	562428	female	A97A	Dash	563226	male
A6	Engine_Cmpt	562427	male	A97A	Dash	563613	female
A7	Rear_Axle_Cmpt	563979	male	A97B	Dash	563226	male
A9.Cx1	FJB	564041	female	A97B	Dash	563613	female
A9.Cx2	FJB	563678	male	A99	FJB	564205	male
A9.Cx3	FJB	564037	female	A100	Front_Axle_Cmpt	563632	male
A9.Cx4	FJB	564038	female	A101	Rr_Axle_Cmpt	563632	male
A14.A	Dash	562766	male	A102	Rr_Axle_Cmpt	563632	male
A14.B	Dash	562767	male	A103	Dash	562070	female
A14.C	Dash	562765	male	A106	FrontVehicle	565974	male
A15	Dash	562464	male	A114A	Dash	564252	male
A18.J1	FJB	562794	male	A130	Driver_Area	563226	male
A18.J2	FJB	562650	male	A131.A	Engine_Cmpt	561782	male
A24.A	RH_Console	561890	male	A131.B	Engine_Cmpt	561781	female
A24.B	RH_Console	561566	female	A137A	CondensorCmpt.	20429843	male
A24.C	RH_Console	561889	female	A138	Cond_Cmpt	563787	male
A27	Service_Cmpt	562929	male	A139	Dash	564501	male
A28	Service_Cmpt	562928	male	AE41.J1	FJB	563679	male
A30.A	Dash	561611	male	AE41.J2	FJB	564037	female
A30.C	Dash	561889	female	AE41.J3	FJB	564004	male
A31.J1	Dash	562780	male	AE42.J1	FJB	563679	male
A31.J2	Dash	562842	male	AE42.J2	FJB	564037	female
A31.J3	Dash	562464	male	AE42.J3	FJB	564004	male
A31.J4	Dash	562465	male	AE43.J1	FJB	563679	male
A31.J5	Dash	563071	male	AE43.J2	FJB	564037	male
A34.J	EngineCmpt.	568118	male	AE43.J3	FJB	565957	male
A34.K	EngineCmpt.	564270	male	AE44.J1	FJB	563679	male
A34.L	EngineCmpt.	564269	male	AE44.J2	FJB	564037	female
A36.JA	FJB	562767	male	AE44.J3	FJB	565957	male
A36.JB	FJB	562765	male	AE45.J1	FJB	563679	male
A36.JC	FJB	562957	male	AE45.J2	FJB	564037	female
A40.A	FJB	561668	male	AE45.J3	FJB	565957	male
A77	Parcelrack	564547	male	AE46.J1	FJB	563679	male
A78	Parcelrack	562583	female	AE46.J2	FJB	564037	female
A79	Parcelrack	562583	female	AE46.J3	FJB	565957	male
A80	Parcelrack	562479	female	AE47.J1	RHConsole	563679	male
A81CN1	FJB	562767	male	AE47.J2	RHConsole	564037	female

CONNECTORS LIST

No	Location	Part #	Gender	No	Location	Part #	Gender
AE47.J3	RHConsole	565957	male	AltUR.C	EngineCmpt.	564469	female
AE48.J1	RHConsole	563679	male	B85	Engine_Cmpt	563815	male
AE48.J2	RHConsole	564037	female	B96	Engine_Cmpt	563821	male
AE48.J3	RHConsole	565957	male	B96B	Engine_Cmpt	563823	male
AE49.J1	RJB	563679	male	B97	Engine_Cmpt	563816	male
AE49.J2	RJB	564037	male	B98	Engine_Cmpt	563817	male
AE49.J3	RJB	565957	male	B99	Engine_Cmpt	563815	male
AE50.J1	RJB	563679	male	B115A	EngineCmpt.	564226	male
AE50.J2	RJB	564037	male	B142C	CondensorCmpt.	563793	male
AE50.J3	RJB	565957	male	B310	EngineCmpt.	565967	male
AE51.J1	RJB	563679	male	C1	FJB	563589	male
AE51.J2	RJB	564037	female	C1	FJB	563590	female
AE51.J3	RJB	565957	male	C1S	FJB	563589	male
AE52.J1	RJB	563679	male	C1S	FJB	563590	female
AE52.J2	RJB	564037	female	C2	Service_Cmpt	563580	male
AE52.J3	RJB	565957	male	C2	Service_Cmpt	563581	female
AE54.J1	EvaporatorCmpt.	563679	male	C2A	FJB	563580	male
AE54.J2	EvaporatorCmpt.	564037	female	C2A	FJB	563581	female
AE54.J3	EvaporatorCmpt.	565957	male	C2B	FJB	564034	male
AE55.J1	Dash	563679	male	C2B	FJB	564035	female
AE55.J2	Dash	564037	female	C3_plug	RJB	563589	male
AE55.J3	Dash	564004	male	C3_socket	RJB	563590	female
AE56.J1	Dash	563679	male	C3S	RJB	563593	male
AE56.J2	Dash	564037	male	C3S	RJB	563590	female
AE56.J3	Dash	564004	male	C4	FJB	563580	male
AE57.J1	3rd_RH_Lugg_Cmpt	563679	male	C4	FJB	563581	female
AE57.J2	3rd_RH_Lugg_Cmpt	564037	male	C5	FJB	563589	male
AE57.J3	3rd_RH_Lugg_Cmpt	564004	male	C5	FJB	563590	female
AE58.J1	SlideoutPanel	563679	male	C5S	FJB	563589	male
AE58.J2	SlideoutPanel	564037	male	C5S	FJB	563590	female
AE58.J3	SlideoutPanel	565957	male	C6	FJB	563582	male
AE59.J1	SlideoutPanel	563679	male	C6	FJB	563583	female
AE59.J2	SlideoutPanel	564037	male	C7	Service_Cmpt	562566	male
AE59.J3	SlideoutPanel	565957	male	C7	Service_Cmpt	562565	female
AltLL.A	EngineCmpt.	563746	female	C8	FJB	563227	male
AltLL.B	EngineCmpt.	560815	female	C8	FJB	563614	female
AltLL.C	EngineCmpt.	564469	female	C9	RJB	561986	male
AltUL.A	EngineCmpt.	563746	female	C9	RJB	561987	female
AltUL.B	EngineCmpt.	560815	female	C10	Engine_Cmpt	562477	male
AltUL.C	EngineCmpt.	564469	female	C10	Engine_Cmpt	562479	female
AltUR.A	EngineCmpt.	563746	female	C11	Service_Cmpt	563580	male
AltUR.B	EngineCmpt.	560815	female	C11	Service_Cmpt	563581	female

CONNECTORS LIST

No	Location	Part #	Gender	No	Location	Part #	Gender
C12	Engine_Cmpt	562581	male	C45	FJB	561642	female
C12	Engine_Cmpt	562583	female	C46	WCL_System	562549	male
C13_plug	RH_Console	563589	male	C46	WCL_System	562550	female
C13_socket	RH_Console	563590	female	C49	FJB	562005	male
C13S	RH_Console	563589	male	C49	FJB	561714	female
C13S	RH_Console	563590	female	C50	RJB	563931	male
C14	FrontVehicle	562581	male	C50	RJB	563930	female
C14	FrontVehicle	562583	female	C52	EvaporatorCmpt.	563618	male
C15A	Evap_Cmpt	568110	male	C52	EvaporatorCmpt.	563616	female
C15A	Evap_Cmpt	568109	female	C54	EngineCmpt.	563226	male
C17	RJB	560195	male	C54	EngineCmpt.	563613	female
C17	RJB	560169	female	C54A	EngineCmpt.	568110	male
C18	FJB	561986	male	C54A	EngineCmpt.	568109	female
C18	FJB	561987	female	C54B	EngineCmpt.	563589	male
C19	RJB	561986	male	C54B	EngineCmpt.	563590	female
C19	RJB	561987	female	C58	CondensorCmpt.	564567	male
C23	Evap_Cmpt	564034	male	C58	CondensorCmpt.	564568	female
C23	Evap_Cmpt	564035	female	C58A	CondensorCmpt.	564258	male
C24_plug	Evap_Cmpt	561690	male	C58A	CondensorCmpt.	566037	female
C24_socket	Evap_Cmpt	561566	female	C59	3rdLuggCmpt.	561643	male
C26	UreaCmpt.	563226	male	C59	3rdLuggCmpt.	561642	female
C26	UreaCmpt.	563613	female	C61	Fr_Service_Door	561669	male
C26A	UreaCmpt.	568110	male	C61	Fr_Service_Door	561670	female
C26A	UreaCmpt.	568109	female	C62	Fr_Service_Door	562566	male
C26B	UreaCmpt.	563227	male	C62	Fr_Service_Door	562565	female
C26B	UreaCmpt.	563614	female	C64	EngineCmpt.	568110	male
C29	WCL_System	563651	male	C64	EngineCmpt.	568109	female
C29	WCL_System	563652	female	C71	FJB	561646	male
C30	WCL_System	561710	male	C71	FJB	561645	female
C30	WCL_System	561709	female	C72	FJB	561646	male
C32W	3rd_RH_Lugg_Cmpt	561640	male	C72	FJB	561645	female
C32W	3rd_RH_Lugg_Cmpt	561639	female	C74	FJB	561645	female
C33	3rd_RH_Lugg_Cmpt	564034	male	C74	FJB	561646	male
C33	3rd_RH_Lugg_Cmpt	564035	female	C80	EvaporatorCmpt.	562477	male
C34	RH_Console	561986	male	C80	EvaporatorCmpt.	562479	female
C34	RH_Console	561987	female	C81	1st_Lugg_Cmpt	562477	male
C39A	EngineCmpt.	561782	male	C81	1st_Lugg_Cmpt	562479	female
C39A	EngineCmpt.	561781	female	C82	1st_Lugg_Cmpt	562477	male
C40	Dash	562485	male	C82	1st_Lugg_Cmpt	562479	female
C40	Dash	562486	female	C83	2nd_Lugg_Cmpt	562477	male
C44_plug	FJB	561577	male	C83	2nd_Lugg_Cmpt	562479	female
C44_socket	FJB	561605	female	C84	2nd_Lugg_Cmpt	562477	male
C45	FJB	561643	male	C84	2nd_Lugg_Cmpt	562479	female

CONNECTORS LIST

No	Location	Part #	Gender	No	Location	Part #	Gender
C85	4rd_Lugg_Cmpt	562477	male	C121	EngineDoor	562565	female
C85	4rd_Lugg_Cmpt	562479	female	C122	EngineDoor	562566	male
C86	4rd_Lugg_Cmpt	563618	male	C122	EngineDoor	562565	female
C86	4rd_Lugg_Cmpt	563616	female	C131A	EngineCmpt.	561782	male
C87	EngineCmpt.	562485	male	C131A	EngineCmpt.	561781	female
C87	EngineCmpt.	562486	female	C131B	EngineCmpt.	561782	male
C88	3rd_RH_Lugg_Cmpt	563618	male	C131B	EngineCmpt.	561781	female
C88	3rd_RH_Lugg_Cmpt	563616	female	C132	RHConsol	561515	male
C89	CondensorCmpt.	562477	male	C132	RHConsol	561552	female
C89	CondensorCmpt.	562479	female	C133	Dash	561986	male
C91	RJB	562285	male	C133	Dash	561987	female
C91	RJB	562282	female	C133A	RH Console	561986	male
C92A	EngineCmpt.	563226	male	C133A	RH Console	561987	female
C92A	EngineCmpt.	563613	female	C134_plug	Dash	561577	male
C92C	EngineCmpt.	562581	male	C134_socket	Dash	561605	female
C92C	EngineCmpt.	562583	female	C152	Cond_Cmpt	561611	male
C94_plug	FJB	563589	male	C152	Cond_Cmpt	561610	female
C94_socket	FJB	563590	female	C158	CondensorCmpt.	562477	male
C96	FJB	561643	male	C158	CondensorCmpt.	562479	female
C96	FJB	561642	female	C159	CondensorCmpt.	566033	male
C97	FJB	561643	male	C159	CondensorCmpt.	566034	female
C97	FJB	561642	female	C170	LH_Console	561637	male
C100	EvaporatorCmpt.	562477	male	C170	LH_Console	561636	female
C100	EvaporatorCmpt.	562479	female	C171	LH_Console	561646	male
C100S	EvaporatorCmpt.	562477	male	C171	LH_Console	561645	female
C100S	EvaporatorCmpt.	562479	female	C172	LHConsole	561637	male
C101	Service_Cmpt	561690	male	C172	LHConsole	561635	female
C101	Service_Cmpt	561566	female	C193_plug	RJB	563589	male
C102A	ServiceCmpt.	563226	male	C193_socket	RJB	563590	female
C102A	ServiceCmpt.	563613	female	C194	FJB	563589	male
C104S_plug	3rdLuggCmpt.	563589	male	C194	FJB	563590	female
C104S_socket	3rdLuggCmpt.	563590	female	C195	Dash	563347	male
C105_plug	FJB	562581	male	C195	Dash	560489	female
C105_socket	FJB	562583	female	C222	FJB	562477	male
C106_plug	FJB	562581	male	C222	FJB	562479	female
C106_socket	FJB	562583	female	C223	FJB	563227	male
C110	PneumPanel	568110	male	C223	FJB	563614	female
C110	PneumPanel	568109	female	C224	FJB	561637	male
C114	3rd_RH_Lugg_Cmpt	561550	male	C224	FJB	561636	female
C114	3rd_RH_Lugg_Cmpt	561667	female	C225	FJB	562650	male
C119A	EngineDoor	568110	male	C225	FJB	562649	female
C119A	EngineDoor	568109	female	C226	FJB	562650	male
C121	EngineDoor	562566	male	C226	FJB	562649	female

CONNECTORS LIST

No	Location	Part #	Gender	No	Location	Part #	Gender
C228	EngineCmpt.	562477	male	C562	3rdLuggCmpt.	561477	female
C228	EngineCmpt.	562479	female	C606_plug	FJB	561690	male
C242	ServiceCmpt.	562789	male	C606_socket	FJB	561566	female
C242	ServiceCmpt.	565131	female	C606A	FJB	561690	male
C243.	ServiceCmpt.	562789	male	C606A	FJB	561566	female
C243.	ServiceCmpt.	565131	female	C606B	FJB	561690	male
C266	EntraceDoor	561640	male	C606B	FJB	561566	female
C266	EntraceDoor	561639	female	C607_plug	FJB	561577	male
C279	Service_Cmpt	562477	male	C607_socket	FJB	561605	female
C279	Service_Cmpt	562479	female	C607A	FJB	561577	male
C290	Rear_Vehicle	562477	male	C607A	FJB	561605	female
C290	Rear_Vehicle	562479	female	C607B	FJB	561577	male
C304	2ndLuggCmpt.	560852	male	C607B	FJB	561605	female
C304	2ndLuggCmpt.	560851	female	C617	Mirror_LH	563801	male
C305	2ndLuggCmpt.	560852	male	C617	Mirror_LH	563800	female
C305	2ndLuggCmpt.	560851	female	C618	Mirror_RH	563801	male
C380A	Dash	564222	male	C618	Mirror_RH	563800	female
C380A	Dash	564224	female	C_ALT	EngineCmpt.	562581	male
C397	RJB	562285	male	C_ALT	EngineCmpt.	562583	female
C397	RJB	562282	female	C_ALT3	EngineCmpt.	562477	male
C463	EngineCmpt.	568112	male	C_ALT3	EngineCmpt.	562479	female
C463	EngineCmpt.	568111	female	C_Mo9	Evap_Cmpt	561577	male
C464A	RJB	564222	male	C_Mo9	Evap_Cmpt	561605	female
C464A	RJB	564224	female	C_Se51	FJB	563589	male
C551	3rdLuggCmpt.	561476	male	C_Se51	FJB	563590	female
C551	3rdLuggCmpt.	561477	female	CCust	RJB	562477	male
C553	2ndLuggCmpt.	561476	male	CCust	RJB	562479	female
C553	2ndLuggCmpt.	561477	female	CF167	RH_Console	562350	male
C554	1stLuggCmpt.	561476	male	CF167	RH_Console	563764	female
C554	1stLuggCmpt.	561477	female	CInt1	FJB	563227	male
C555	1stLuggCmpt.	561476	male	CInt1	FJB	563614	female
C555	1stLuggCmpt.	561477	female	CInt2	FJB	563226	male
C556	3rdLuggCmpt.	561476	male	CInt2	FJB	563613	female
C556	3rdLuggCmpt.	561477	female	CSo1	SlideOutPanel	562581	male
C557	2ndLugg.Cmpt.	561476	male	CSo1	SlideOutPanel	562583	female
C557	2ndLuggCmpt.	561477	female	CSo2	SlideOutPanel	561643	male
C559	3rdLuggCmpt.	561476	male	CSo2	SlideOutPanel	561641	female
C559	3rdLuggCmpt.	561477	female	CSo5	SlideOutPanel	561847	male
C560	3rdLuggCmpt.	561476	male	CSo5	SlideOutPanel	561862	female
C560	3rdLuggCmpt.	561477	female	CSo7	SlideOutPanel	562581	male
C561	3rdLuggCmpt.	561476	male	CSo7	SlideOutPanel	562583	female
C561	3rdLuggCmpt.	561477	female	CT_In	Rear_Vehicle	563582	male
C562	3rdLuggCmpt.	561476	male	CT_In	Rear_Vehicle	563583	female

CONNECTORS LIST

No	Location	Part #	Gender	No	Location	Part #	Gender
CT_Out	Rear_Vehicle	560478	female	L81.A	DPFDoor	562835	female
EI	EngineCmpt.	563739	male	L81.B	DFPDoor	562834	male
L1A	EngineCmpt.	562848	male	L82A	EngineDoor	562348	female
L10	Dash	561247	male	L83A	EngineDoor	562348	female
L16.A	FrontRoof	562615	female	L84.	RrRoof	562486	female
L16.B	FrontRoof	562615	female	L85.	RrRoof	562486	female
L17.A	FrontRoof	562615	female	L86.	RrRoof	562486	female
L17.B	FrontRoof	562615	female	L87.	RrRoof	562486	female
L18.A	EntraceDoor	561626	female	L88.	RrRoof	562486	female
L18.B	EntraceDoor	561626	female	L89.	RrRoof	562486	female
L21.	OutsideFront	560605	female	L90.	RrRoof	562486	female
L22.	OutsideFront	560605	female	L91A	RearVehiculeLH	562601	male
L23.	OutsideFront	560605	female	L92A	RearVehicleRH	562601	male
L24.	OutsideFront	560605	female	L93.A	RearOutsideLH	563069	female
L25.	OutsideFront	560605	female	L93.B	RearOutsideLH	563069	female
L26.	OutsideFront	560605	female	L94.A	RearOutsideRH	563069	female
L27.	OutsideFront	560605	female	L94.B	RearOutsideRH	563069	female
L59	OutsidefrontRH	562623	male	L95	Outside_Front_LH	562902	female
L59A	OutsideFrontRH	563366	male	L96	Outside_Front_RH	562902	female
L59B	OutsideFrontRH	562623	male	L97.A	Outside_Front_LH	563069	female
L60	OutsideFrontLH	562623	male	L97.B	Outside_Front_LH	563069	female
L60A	OutsideFrontLH	563366	male	L98.A	EntraceDoor	563069	female
L60B	OutsideFrontLH	562623	male	L98.B	EntraceDoor	563069	female
L61	OutsideFrontRH	562601	male	L120	DriverSeat	562237	female
L62	OutsideFrontLH	562601	male	L173	EngineCmpt.	563590	female
L63	FrontSideRH	562155	male	L174A	EngineCmpt.	563590	female
L64	OutsideFrontRH	562155	male	L176	3rd_Lugg_Cmpt	561247	male
L65	FrontSideLH	562155	male	L177	3rd_Lugg_Cmpt	561247	male
L66	OutsideFrontLH	562155	male	L178	4thLuggCmpt.	561247	male
L67	3rdLuggCmpt.	562155	male	L179	4thLuggCmpt.	561247	male
L68	3rdLuggCmpt.	562155	male	L180	2nd_Lugg_Cmpt	561247	male
L69	EvapCmpt.	562155	male	L181	2nd_Lugg_Cmpt	561247	male
L70	EvapCmpt.	562155	male	L182	1st_Lugg_Cmpt	561247	male
L71A	RearVehicleLH	562601	male	L183	1st_Lugg_Cmpt	561247	male
L72	Rear_VehicleLH	562155	male	L184	ServiceCmpt.	561247	male
L73A	RearVehicleRH	562601	male	L185.A	Dash	561539	male
L74	RearVehicleRH	562155	male	L185.B	Dash	561539	male
L75	RearVehicleLH	562155	male	L186.A	Dash	561539	male
L76	RearVehicleRH	562155	male	L186.B	Dash	561539	male
L77A	RearVehicleRH	562601	male	L187	Engine_Cmpt	561690	male
L78A	RearVehicleRH	562601	male	L193.A	Dash	560488	female
L79A	RearVehicleLH	562601	male	L193.B	Dash	560488	female
L80A	RearVehicleLH	562601	male	L194.A	Dash	562019	female

CONNECTORS LIST

No	Location	Part #	Gender	No	Location	Part #	Gender
L194.B	Dash	560488	female	Mo24	RH_Console	562348	female
L195.A	Dash	560488	female	Mo25	RH_Console	562348	female
L195.B	Dash	560488	female	Mo26	EntraceDoor	564161	male
L199	EngineCmpt.	562848	male	Mo27	Cond_Cmpt	563691	male
L203	RH_Console	561690	male	Mo28	Cond_Cmpt	563691	male
L204	WCL_Upper_Door	562803	male	Mo29	RJB	563590	female
L205	EvapCmpt.	562485	male	Mo30	1stLuggCmpt.LH	564161	male
L206	WCL_Upper_Door	562803	male	Mo31	1stLuggCmpt.RH	564161	male
L207.A	WCL_System	561699	female	Mo32	2ndLuggCmpt.LH	564161	male
L207.B	WCL_System	561701	female	Mo33	2ndLuggCmpt.RH	564161	male
L207.C	WCL_System	561701	female	Mo34	3rdLuggCmpt.LH	564161	male
L207.D	WCL_System	561699	female	Mo35	3rdLuggCmpt.RH	564161	male
L207.E	WCL_System	561701	female	Mo36	CompressorDoor	564161	male
L207.F	WCL_System	561699	female	Mo37	4thLuggCmpt.RH	564161	male
L207.G	WCL_System	561699	female	Mo38	4thLuggCmpt.LH	564161	male
L207.H	WCL_System	560926	female	Mo40	1stLuggCmpt.LH	561477	female
L207.I	WCL_System	560926	female	Mo41	2ndLuggCmpt.LH	561477	female
L282	Preheater_Cmpt	561690	male	Mo42	3rdLuggCmpt.LH	561477	female
L285.A	Rear_Vehicle	562835	female	Mo43	3rdLuggCmpt.LH	561477	female
L285.B	Rear_Vehicle	562834	male	Mo50	FrontAxleCmpt.	561690	male
L286.A	Rear_Vehicle	562835	female	Mo54	Service_Cmpt	562474	male
L286.B	Rear_Vehicle	562834	male	Mo55	EntraceDoor	563626	male
L298A	EngineCmpt.	563590	female	Mo65	EngineCmpt.	568089	male
L304	OutsideLuggDoorLH	562155	male	Mo67	EngineCmpt.	568089	male
L305	OutsideLuggDoorRH	562155	male	Mo68	EngineCmpt.	568089	male
L306	Radiator_Door	562155	male	Mo69	EngineCmpt.	568089	male
L307	Radiator_Door	562155	male	Mo70	EngineCmpt.	568089	male
L309	RJB	561247	male	Mo71	EngineCmpt.	568089	male
L350A.A	RearAxleCmpt.	564552	male	Mo72	EngineCmpt.	568089	male
L350A.B	RearAxleCmpt.	563340	male	Mo73	EngineCmpt.	568089	male
L350A.C	RearAxleCmpt.	562251	male	MoSO1	FrontSlideOut	562350	male
Mo3	Dash	561667	female	MoSO2	RearSlideOut	562350	male
Mo4	Dash	564161	male	PC1	CantrackCable	562650	male
Mo7	Cond_Cmpt	563691	male	PC1	CantrackCable	562649	female
Mo8	Cond_Cmpt	563691	male	R1.A	RJB	562486	female
Mo11	CondensorCmpt.	568089	male	R3	RJB	563409	male
Mo12	Engine_Cmpt	561690	male	R6	Dash	564496	male
Mo15.	FrCeling	563517	female	R7	Dash	564496	male
Mo16.	FrCeling	563517	female	R12	Evap_Cmpt	563409	male
Mo17	RH_Console	563626	male	R21	FJB	560525	male
Mo19	Fr_Service_Door	562474	male	R27	Dash	564496	male
Mo20	Fr_Service_Door	562474	male	R29	RJB	563409	male
Mo22	RH_Console	561186	male	R30	FJB	564496	male

CONNECTORS LIST

No	Location	Part #	Gender	No	Location	Part #	Gender
R31	FJB	564496	male	Se23	EngineCmpt.	563159	female
R34	RJB	564210	male	Se23A	EngineCmpt.	563159	female
R35	RJB	564210	male	Se24	EngineCmpt.	563758	female
R36	Dash	564496	male	Se24A	EngineCmpt.	563758	female
R37	Dash	564496	male	Se25	EvapCmpt.	561248	female
R38	FJB	564496	male	Se29	Engine_Cmpt	561566	female
R47	WCL_System	564496	male	Se30	EngineCmpt.	562877	female
R167	RH_Console	564496	male	Se31	EngineCmpt.	562877	female
Res3	ParcelRack	563590	female	Se32	Rear_Axle_Cmpt	562426	male
Res4	RH_Console	563590	female	Se33	Rear_Axle_Cmpt	562856	male
Res6	FJB	563590	female	Se34	Rear_Axle_Cmpt	562426	male
Res7	Dashboard	563590	female	Se35	Rear_Axle_Cmpt	562426	male
Res15	Engine_Cmpt	561782	male	Se36	Rear_Axle_Cmpt	562427	male
Res19	FJB	563590	female	Se37	Front_Axle_LH	641132	female
Res20	FJB	563590	female	Se38	Front_Axle_RH	641132	female
Res31	UreaCmpt.	562350	male	Se39	Rear_Axle_LH	641132	female
Res32	UreaCmpt.	563764	female	Se40	Rear_Axle_LH	641132	female
Res46	Rear_Axle	563590	female	Se45	ServiceCmpt.	563409	male
Res53.A	CondensorCmpt.	563590	female	Se46	RearAxleCmpt.	562348	female
Res99	Dash	563590	female	Se49	EngineCmpt.	561690	male
RSO1_1	SlideOutPanel	564496	male	Se51	DriverSeat	563589	male
RSO1_2	SlideOutPanel	564496	male	Se53	Service_Cmpt	563159	female
RSO2_1	SlideOutPanel	564496	male	Se54	Service_Cmpt	563159	female
RSO2_2	SlideOutPanel	564496	male	Se55	Service_Cmpt	563159	female
Se2	FJB	561566	female	Se56	WCLcompt.	562884	female
Se11.A	Cond_Cmpt	560082	female	Se57	Pneumatic Panel	563159	female
Se11.B	Cond_Cmpt	560082	female	Se60	Service_Cmpt	563409	male
Se11.C	Cond_Cmpt	560082	female	Se62	WCL_system	561690	male
Se13	Engine_Cmpt	562350	male	Se63	RearAxleCmpt.	641132	female
Se14.A	Driver_Area	561782	male	Se64	RearAxleCmpt.	641132	female
Se14.B	Driver_Area	561781	female	Se65	Dash	564042	female
Se15.A	EntraceDoor	560488	female	Se66	FrontAxleCmpt.	564039	female
Se15.B	EntraceDoor	560488	female	Se67	ServiceCmpt.	563159	female
Se15.C	EntraceDoor	560488	female	Se69	ServiceCmpt.	563159	female
Se16.A	EntraceDoor	562651	female	Se89	EngineCmpt	562350	male
Se16.B	EntraceDoor	562651	female	Se94	WCL_system	562877	female
Se17.A	EntraceDoor	562291	female	Se100	WCL_Upper_Door	562479	female
Se17.B	EntraceDoor	562291	female	SESO1	SlideOutPanel	563159	female
Se17.C	EntraceDoor	562291	female	SESO2_SESO3	Frontslideout	562479	female
Se18	ServiceCmpt.	561566	female	SESO5_SESO6	Rearslideout	562479	female
Se19_P	Service_Cmpt	563677	male	So3	RHConsole	641385	male
Se19_S	Service_Cmpt	563677	male	So7	Service_Cmpt	561566	female
Se20.	Front_Axle_Cmpt	562426	male	So8	ServiceCmpt.	641385	male
Se21	Dash	561248	female	So9	EngineCmpt.	560016	female

CONNECTORS LIST

No	Location	Part #	Gender	No	Location	Part #	Gender
So11	Cond_Cmpt	561566	female	Sw18A	LH_Console	562763	male
So13	Evap_Cmpt	563204	female	Sw20	Dashboard	562763	male
So17	Service_Cmpt	562848	male	Sw24	Dash	562763	male
So21	Front_Axle_Cmpt	564046	female	Sw24A	Dash	562763	male
So22	Front_Axle_Cmpt	564046	female	Sw34	Dash	562763	male
So23	Rear_Axle_Cmpt	564046	female	Sw35	LHConsole	562763	male
So24	Rear_Axle_Cmpt	564046	female	Sw38	LH_Console	562763	male
So27	RearAxleCmpt.	564045	female	Sw40	LH_Console	561690	male
So28	ServiceCmpt.	641385	male	Sw41	LH_Console	562749	male
So29	ServiceCmpt.	641385	male	Sw42	WCL_System	561636	female
So30	ServiceCmpt.	641385	male	Sw44.A	ServiceCmpt.	562403	female
So31	ServiceCmpt.	641385	male	Sw45.A	3rd_Lugg_Cmpt	562403	female
So32	ServiceCmpt.	641385	male	Sw45.B	3rdLuggCmpt.	562403	female
So36	EngineCmpt.	561690	male	Sw46.A	3rd_Lugg_Cmpt	562403	female
So50	RearAxleCmpt.	564046	female	Sw46.B	3rdLuggCmpt.	562403	female
So52	FrontAxleCmpt.	564045	female	Sw46A.A	3rd_RH_Lugg_Cmpt	562403	female
spBar4	EngineCmpt.	564135	male	Sw46A.B	3rd_RH_Lugg_Cmpt	562403	female
spBar5	EngineCmpt.	564135	male	Sw47.A	4thLuggCmpt.	562403	female
spBar6	EngineCmpt.	564135	male	Sw47.B	4thLuggCmpt.	562403	female
spBar7	CondCmpt.	564135	male	Sw48.A	4thLuggCmpt.	562403	female
spBar11	EngineCmpt.	564135	male	Sw48.B	4thLuggCmpt.	562403	female
spBar12	EngineCmpt.	564135	male	Sw49.A	2nd_Lugg_Cmpt	562403	female
spBar13	EngineCmpt.	564135	male	Sw49.B	2ndLuggCmpt.	562403	female
spBar14	EngineCmpt.	564135	male	Sw50.A	2nd_Lugg_Cmpt	562403	female
spBar15	EngineCmpt.	564135	male	Sw51.A	1st_Lugg_Cmpt	562403	female
spBar16	EngineCmpt.	564135	male	Sw52.A	1st_Lugg_Cmpt	562403	female
spBar19	CondCmpt.	564135	male	Sw58.A	EngineCmpt.	563135	male
spBar20	CondCmpt.	564135	male	Sw59	EngineCmpt.	563135	male
spBar21	CondCmpt.	564135	male	Sw63A	LHConsole	562763	male
spBar22	EngineCmpt.	564135	male	Sw64.A	ServiceCmpt.	560815	female
spBar23	EngineCmpt.	564135	male	Sw64.B	Ssp	560815	female
spBar24	EngineCmpt.	564135	male	Sw82	RJB	563135	male
spBar26	Rr_Axle_Cmpt	564135	male	Sw83.A	Dash	560082	female
spBar27	Rr_Axle_Cmpt	564135	male	Sw83.B	Dash	560815	female
Sw1.C258	Driver_Area	561188	female	Sw83.C	Dash	560082	female
Sw1.C259	Driver_Area	561186	male	Sw83.D	Dash	560815	female
Sw2	Dash	562763	male	Sw85	LH_Console	562749	male
Sw3	Dash	562763	male	Sw99	Dash	562763	male
Sw4	Dash	562763	male	Sw102	Dash	562763	male
Sw6	Dash	562763	male	Sw103A	LHConsole	562763	male
Sw14	Dash	562763	male	Sw104	Dash	562763	male
Sw16	Dash	562763	male	Sw107.A	LHConsole	561457	female
Sw17	Dash	562763	male	Sw107.B	LHConsole	561457	female

CONNECTORS LIST

No	Location	Part #	Gender	No	Location	Part #	Gender
Sw107.C	LHConsole	561457	female	VECR4	RJB	563182	male
Sw107.D	LHConsole	561457	female	VECR9	RJB	563448	male
Sw107.E	LHConsole	561457	female	VECR10	RJB	563181	male
Sw107.F	LHConsole	561457	female	VECR11	RJB	563184	male
Sw107.G	LHConsole	561457	female	VECR12	RJB	563187	male
Sw107.H	LHConsole	561457	female	VECT2	Rear_Vehicle	563716	male
Sw107.J	LHConsole	561457	female	VECT3	RearVehicle	563718	male
Sw107.K	LHConsole	561457	female	VECT4	RearVehicle	563714	male
Sw108	LHConsole	562763	male	Y80	Engine_Cmpt	563789	male
Sw109.A	1st_Lugg_LH	560079	female	Y81	Cond_Cmpt	563793	male
Sw109.B	1st_Lugg_LH	560079	female				
Sw110.A	1st_Lugg_RH	560079	female				
Sw110.B	1st_Lugg_RH	560079	female				
Sw111.A	2ndLuggCmpt.	560079	female				
Sw111.B	2ndLuggCmpt.	560079	female				
Sw112.A	2ndLuggCmpt.	560079	female				
Sw112.B	2ndLuggCmpt.	560079	female				
Sw113.A	2ndLuggCmpt.	560079	female				
Sw113.B	2ndLuggCmpt.	560079	female				
Sw114.A	3rd_Lugg_RH	560079	female				
Sw114.B	3rd_Lugg_RH	560079	female				
Sw115.A	Compr_Door	560079	female				
Sw115.B	Compr_Door	560079	female				
Sw122	ServiceCmpt.	562763	male				
Sw137	Dash	562763	male				
Sw156	LH_Console	562763	male				
Sw157	Dash	562763	male				
Sw158	Dash	562763	male				
SwSo1	FrontSlideOut	561552	female				
SwSo2	RearSlideOut	561552	female				
Term106	RJB	{part_no564189}	N/A				
Term107	RJB	{part_no564189}	N/A				
VECF1	FJB	563186	male				
VECF2	FJB	563183	male				
VECF3	FJB	563185	male				
VECF4	FJB	563182	male				
VECF9	FJB	563448	male				
VECF10	FJB	563181	male				
VECF11	FJB	563184	male				
VECF12	FJB	563187	male				
VECR1	RJB	563186	male				
VECR2	RJB	563183	male				
VECR3	RJB	563185	male				

CONNECTORS LIST

No	Location	Part #	Gender	No	Location	Part #	Gender
A1	RJB	563975	male	A81CN3A	FJB	564741	male
A2	FJB	563984	male	A81CN3B	FJB	564742	male
A3	Dash	562363	male	A83	Parcelrack	565970	female
A4.A	Service_Cmpt	562428	female	A96	FJB	564205	male
A4.B	Service_Cmpt	561188	female	A97	Dash	563226	male
A5	Service_Cmpt	562428	female	A97A	Dash	563226	male
A6	Engine_Cmpt	562427	male	A97A	Dash	563613	female
A7	Rear_Axle_Cmpt	563979	male	A97B	Dash	563226	male
A9.Cx1	FJB	564041	female	A97B	Dash	563613	female
A9.Cx2	FJB	563678	male	A99	FJB	564205	male
A9.Cx3	FJB	564037	female	A100	Front_Axle_Cmpt	563632	male
A9.Cx4	FJB	564038	female	A101	Rr_Axle_Cmpt	563632	male
A14.A	Dash	562766	male	A102	Rr_Axle_Cmpt	563632	male
A14.B	Dash	562767	male	A103	Dash	562070	female
A14.C	Dash	562765	male	A106	FrontVehicle	565974	male
A15	Dash	562464	male	A114A	Dash	564252	male
A18.J1	FJB	562794	male	A130	Driver_Area	563226	male
A18.J2	FJB	562650	male	A131.A	Engine_Cmpt	561782	male
A24.A	RH_Console	561890	male	A131.B	Engine_Cmpt	561781	female
A24.B	RH_Console	561566	female	A137A	CondensorCmpt.	20429843	male
A24.C	RH_Console	561889	female	A138	Cond_Cmpt	563787	male
A27	Service_Cmpt	562929	male	A139	Dash	564501	male
A28	Service_Cmpt	562928	male	AE41.J1	FJB	563679	male
A30.A	Dash	561611	male	AE41.J2	FJB	564037	female
A30.C	Dash	561889	female	AE41.J3	FJB	564004	male
A31.J1	Dash	562780	male	AE42.J1	FJB	563679	male
A31.J2	Dash	562842	male	AE42.J2	FJB	564037	female
A31.J3	Dash	562464	male	AE42.J3	FJB	564004	male
A31.J4	Dash	562465	male	AE43.J1	FJB	563679	male
A31.J5	Dash	563071	male	AE43.J2	FJB	564037	male
A34.J	EngineCmpt.	568118	male	AE43.J3	FJB	565957	male
A34.K	EngineCmpt.	564270	male	AE44.J1	FJB	563679	male
A34.L	EngineCmpt.	564269	male	AE44.J2	FJB	564037	female
A36.JA	FJB	562767	male	AE44.J3	FJB	565957	male
A36.JB	FJB	562765	male	AE45.J1	FJB	563679	male
A36.JC	FJB	562957	male	AE45.J2	FJB	564037	female
A40.A	FJB	561668	male	AE45.J3	FJB	565957	male
A77	Parcelrack	564547	male	AE46.J1	FJB	563679	male
A78	Parcelrack	562583	female	AE46.J2	FJB	564037	female
A79	Parcelrack	562583	female	AE46.J3	FJB	565957	male
A80	Parcelrack	562479	female	AE47.J1	RHConsole	563679	male
A81CN1	FJB	562767	male	AE47.J2	RHConsole	564037	female

CONNECTORS LIST

No	Location	Part #	Gender	No	Location	Part #	Gender
AE47.J3	RHConsole	565957	male	AltUR.C	EngineCmpt.	564469	female
AE48.J1	RHConsole	563679	male	B85	Engine_Cmpt	563815	male
AE48.J2	RHConsole	564037	female	B96	Engine_Cmpt	563821	male
AE48.J3	RHConsole	565957	male	B96B	Engine_Cmpt	563823	male
AE49.J1	RJB	563679	male	B97	Engine_Cmpt	563816	male
AE49.J2	RJB	564037	male	B98	Engine_Cmpt	563817	male
AE49.J3	RJB	565957	male	B99	Engine_Cmpt	563815	male
AE50.J1	RJB	563679	male	B115A	EngineCmpt.	564226	male
AE50.J2	RJB	564037	male	B142C	CondensorCmpt.	563793	male
AE50.J3	RJB	565957	male	B310	EngineCmpt.	565967	male
AE51.J1	RJB	563679	male	C1	FJB	563589	male
AE51.J2	RJB	564037	female	C1	FJB	563590	female
AE51.J3	RJB	565957	male	C1S	FJB	563589	male
AE52.J1	RJB	563679	male	C1S	FJB	563590	female
AE52.J2	RJB	564037	female	C2	Service_Cmpt	563580	male
AE52.J3	RJB	565957	male	C2	Service_Cmpt	563581	female
AE54.J1	EvaporatorCmpt.	563679	male	C2A	FJB	563580	male
AE54.J2	EvaporatorCmpt.	564037	female	C2A	FJB	563581	female
AE54.J3	EvaporatorCmpt.	565957	male	C2B	FJB	564034	male
AE55.J1	Dash	563679	male	C2B	FJB	564035	female
AE55.J2	Dash	564037	female	C3_plug	RJB	563589	male
AE55.J3	Dash	564004	male	C3_socket	RJB	563590	female
AE56.J1	Dash	563679	male	C3S	RJB	563593	male
AE56.J2	Dash	564037	male	C3S	RJB	563590	female
AE56.J3	Dash	564004	male	C4	FJB	563580	male
AE57.J1	3rd_RH_Lugg_Cmpt	563679	male	C4	FJB	563581	female
AE57.J2	3rd_RH_Lugg_Cmpt	564037	male	C5	FJB	563589	male
AE57.J3	3rd_RH_Lugg_Cmpt	564004	male	C5	FJB	563590	female
AE58.J1	SlideoutPanel	563679	male	C5S	FJB	563589	male
AE58.J2	SlideoutPanel	564037	male	C5S	FJB	563590	female
AE58.J3	SlideoutPanel	565957	male	C6	FJB	563582	male
AE59.J1	SlideoutPanel	563679	male	C6	FJB	563583	female
AE59.J2	SlideoutPanel	564037	male	C7	Service_Cmpt	562566	male
AE59.J3	SlideoutPanel	565957	male	C7	Service_Cmpt	562565	female
AltLL.A	EngineCmpt.	563746	female	C8	FJB	563227	male
AltLL.B	EngineCmpt.	560815	female	C8	FJB	563614	female
AltLL.C	EngineCmpt.	564469	female	C9	RJB	561986	male
AltUL.A	EngineCmpt.	563746	female	C9	RJB	561987	female
AltUL.B	EngineCmpt.	560815	female	C10	Engine_Cmpt	562477	male
AltUL.C	EngineCmpt.	564469	female	C10	Engine_Cmpt	562479	female
AltUR.A	EngineCmpt.	563746	female	C11	Service_Cmpt	563580	male
AltUR.B	EngineCmpt.	560815	female	C11	Service_Cmpt	563581	female

CONNECTORS LIST

No	Location	Part #	Gender	No	Location	Part #	Gender
C12	Engine_Cmpt	562581	male	C45	FJB	561642	female
C12	Engine_Cmpt	562583	female	C46	WCL_System	562549	male
C13_plug	RH_Console	563589	male	C46	WCL_System	562550	female
C13_socket	RH_Console	563590	female	C49	FJB	562005	male
C13S	RH_Console	563589	male	C49	FJB	561714	female
C13S	RH_Console	563590	female	C50	RJB	563931	male
C14	FrontVehicle	562581	male	C50	RJB	563930	female
C14	FrontVehicle	562583	female	C52	EvaporatorCmpt.	563618	male
C15A	Evap_Cmpt	568110	male	C52	EvaporatorCmpt.	563616	female
C15A	Evap_Cmpt	568109	female	C54	EngineCmpt.	563226	male
C17	RJB	560195	male	C54	EngineCmpt.	563613	female
C17	RJB	560169	female	C54A	EngineCmpt.	568110	male
C18	FJB	561986	male	C54A	EngineCmpt.	568109	female
C18	FJB	561987	female	C54B	EngineCmpt.	563589	male
C19	RJB	561986	male	C54B	EngineCmpt.	563590	female
C19	RJB	561987	female	C58	CondensorCmpt.	564567	male
C23	Evap_Cmpt	564034	male	C58	CondensorCmpt.	564568	female
C23	Evap_Cmpt	564035	female	C58A	CondensorCmpt.	564258	male
C24_plug	Evap_Cmpt	561690	male	C58A	CondensorCmpt.	566037	female
C24_socket	Evap_Cmpt	561566	female	C59	3rdLuggCmpt.	561643	male
C26	UreaCmpt.	563226	male	C59	3rdLuggCmpt.	561642	female
C26	UreaCmpt.	563613	female	C61	Fr_Service_Door	561669	male
C26A	UreaCmpt.	568110	male	C61	Fr_Service_Door	561670	female
C26A	UreaCmpt.	568109	female	C62	Fr_Service_Door	562566	male
C26B	UreaCmpt.	563227	male	C62	Fr_Service_Door	562565	female
C26B	UreaCmpt.	563614	female	C64	EngineCmpt.	568110	male
C29	WCL_System	563651	male	C64	EngineCmpt.	568109	female
C29	WCL_System	563652	female	C71	FJB	561646	male
C30	WCL_System	561710	male	C71	FJB	561645	female
C30	WCL_System	561709	female	C72	FJB	561646	male
C32W	3rd_RH_Lugg_Cmpt	561640	male	C72	FJB	561645	female
C32W	3rd_RH_Lugg_Cmpt	561639	female	C74	FJB	561645	female
C33	3rd_RH_Lugg_Cmpt	564034	male	C74	FJB	561646	male
C33	3rd_RH_Lugg_Cmpt	564035	female	C80	EvaporatorCmpt.	562477	male
C34	RH_Console	561986	male	C80	EvaporatorCmpt.	562479	female
C34	RH_Console	561987	female	C81	1st_Lugg_Cmpt	562477	male
C39A	EngineCmpt.	561782	male	C81	1st_Lugg_Cmpt	562479	female
C39A	EngineCmpt.	561781	female	C82	1st_Lugg_Cmpt	562477	male
C40	Dash	562485	male	C82	1st_Lugg_Cmpt	562479	female
C40	Dash	562486	female	C83	2nd_Lugg_Cmpt	562477	male
C44_plug	FJB	561577	male	C83	2nd_Lugg_Cmpt	562479	female
C44_socket	FJB	561605	female	C84	2nd_Lugg_Cmpt	562477	male
C45	FJB	561643	male	C84	2nd_Lugg_Cmpt	562479	female

CONNECTORS LIST

No	Location	Part #	Gender	No	Location	Part #	Gender
C85	4rd_Lugg_Cmpt	562477	male	C121	EngineDoor	562565	female
C85	4rd_Lugg_Cmpt	562479	female	C122	EngineDoor	562566	male
C86	4rd_Lugg_Cmpt	563618	male	C122	EngineDoor	562565	female
C86	4rd_Lugg_Cmpt	563616	female	C130	Dash	562583	female
C87	EngineCmpt.	562485	male	C131A	EngineCmpt.	561782	male
C87	EngineCmpt.	562486	female	C131A	EngineCmpt.	561781	female
C88	3rd_RH_Lugg_Cmpt	563618	male	C131B	EngineCmpt.	561782	male
C88	3rd_RH_Lugg_Cmpt	563616	female	C131B	EngineCmpt.	561781	female
C89	CondensorCmpt.	562477	male	C132	RHConsol	561515	male
C89	CondensorCmpt.	562479	female	C132	RHConsol	561552	female
C91	RJB	562285	male	C133	Dash	561986	male
C91	RJB	562282	female	C133	Dash	561987	female
C92A	EngineCmpt.	563226	male	C133A	RH Console	561986	male
C92A	EngineCmpt.	563613	female	C133A	RH Console	561987	female
C92C	EngineCmpt.	562581	male	C134_plug	Dash	561577	male
C92C	EngineCmpt.	562583	female	C134_socket	Dash	561605	female
C94_plug	FJB	563589	male	C152	Cond_Cmpt	561611	male
C94_socket	FJB	563590	female	C152	Cond_Cmpt	561610	female
C96	FJB	561643	male	C158	CondensorCmpt.	562477	male
C96	FJB	561642	female	C158	CondensorCmpt.	562479	female
C97	FJB	561643	male	C159	CondensorCmpt.	566033	male
C97	FJB	561642	female	C159	CondensorCmpt.	566034	female
C100	EvaporatorCmpt.	562477	male	C170	LH_Console	561637	male
C100	EvaporatorCmpt.	562479	female	C170	LH_Console	561636	female
C100S	EvaporatorCmpt.	562477	male	C171	LH_Console	561646	male
C100S	EvaporatorCmpt.	562479	female	C171	LH_Console	561645	female
C101	Service_Cmpt	561690	male	C172	LHConsole	561637	male
C101	Service_Cmpt	561566	female	C172	LHConsole	561635	female
C102A	ServiceCmpt.	563226	male	C193_plug	RJB	563589	male
C102A	ServiceCmpt.	563613	female	C193_socket	RJB	563590	female
C104S_plug	3rdLuggCmpt.	563589	male	C194	FJB	563589	male
C104S_socket	3rdLuggCmpt.	563590	female	C194	FJB	563590	female
C105_plug	FJB	562581	male	C195	Dash	563347	male
C105_socket	FJB	562583	female	C195	Dash	560489	female
C106_plug	FJB	562581	male	C222	FJB	562477	male
C106_socket	FJB	562583	female	C222	FJB	562479	female
C110	PneumPanel	568110	male	C223	FJB	563227	male
C110	PneumPanel	568109	female	C223	FJB	563614	female
C114	3rd_RH_Lugg_Cmpt	561550	male	C224	FJB	561637	male
C114	3rd_RH_Lugg_Cmpt	561667	female	C224	FJB	561636	female
C119A	EngineDoor	568110	male	C225	FJB	562650	male
C119A	EngineDoor	568109	female	C225	FJB	562649	female
C121	EngineDoor	562566	male	C226	FJB	562650	male
				C226	FJB	562649	female

CONNECTORS LIST

No	Location	Part #	Gender	No	Location	Part #	Gender
C228	EngineCmpt.	562477	male	C562	3rdLuggCmpt.	561477	female
C228	EngineCmpt.	562479	female	C606_plug	FJB	561690	male
C242	ServiceCmpt.	562789	male	C606_socket	FJB	561566	female
C242	ServiceCmpt.	565131	female	C606A	FJB	561690	male
C243.	ServiceCmpt.	562789	male	C606A	FJB	561566	female
C243.	ServiceCmpt.	565131	female	C606B	FJB	561690	male
C266	EntraceDoor	561640	male	C606B	FJB	561566	female
C266	EntraceDoor	561639	female	C607_plug	FJB	561577	male
C279	Service_Cmpt	562477	male	C607_socket	FJB	561605	female
C279	Service_Cmpt	562479	female	C607A	FJB	561577	male
C290	Rear_Vehicle	562477	male	C607A	FJB	561605	female
C290	Rear_Vehicle	562479	female	C607B	FJB	561577	male
C304	2ndLuggCmpt.	560852	male	C607B	FJB	561605	female
C304	2ndLuggCmpt.	560851	female	C617	Mirror_LH	563801	male
C305	2ndLuggCmpt.	560852	male	C617	Mirror_LH	563800	female
C305	2ndLuggCmpt.	560851	female	C618	Mirror_RH	563801	male
C380A	Dash	564222	male	C618	Mirror_RH	563800	female
C380A	Dash	564224	female	C_ALT	EngineCmpt.	562581	male
C397	RJB	562285	male	C_ALT	EngineCmpt.	562583	female
C397	RJB	562282	female	C_ALT3	EngineCmpt.	562477	male
C463	EngineCmpt.	568112	male	C_ALT3	EngineCmpt.	562479	female
C463	EngineCmpt.	568111	female	C_Mo9	Evap_Cmpt	561577	male
C464A	RJB	564222	male	C_Mo9	Evap_Cmpt	561605	female
C464A	RJB	564224	female	C_Se51	FJB	563589	male
C551	3rdLuggCmpt.	561476	male	C_Se51	FJB	563590	female
C551	3rdLuggCmpt.	561477	female	CCust	RJB	562477	male
C553	2ndLuggCmpt.	561476	male	CCust	RJB	562479	female
C553	2ndLuggCmpt.	561477	female	CF167	RH_Console	562350	male
C554	1stLuggCmpt.	561476	male	CF167	RH_Console	563764	female
C554	1stLuggCmpt.	561477	female	CInt1	FJB	563227	male
C555	1stLuggCmpt.	561476	male	CInt1	FJB	563614	female
C555	1stLuggCmpt.	561477	female	CInt2	FJB	563226	male
C556	3rdLuggCmpt.	561476	male	CInt2	FJB	563613	female
C556	3rdLuggCmpt.	561477	female	CSo1	SlideOutPanel	562581	male
C557	2ndLugg.Cmpt.	561476	male	CSo1	SlideOutPanel	562583	female
C557	2ndLuggCmpt.	561477	female	CSo2	SlideOutPanel	561643	male
C559	3rdLuggCmpt.	561476	male	CSo2	SlideOutPanel	561641	female
C559	3rdLuggCmpt.	561477	female	CSo5	SlideOutPanel	561847	male
C560	3rdLuggCmpt.	561476	male	CSo5	SlideOutPanel	561862	female
C560	3rdLuggCmpt.	561477	female	CSo7	SlideOutPanel	562581	male
C561	3rdLuggCmpt.	561476	male	CSo7	SlideOutPanel	562583	female
C561	3rdLuggCmpt.	561477	female	CT_In	Rear_Vehicle	563582	male
C562	3rdLuggCmpt.	561476	male	CT_In	Rear_Vehicle	563583	female

CONNECTORS LIST

No	Location	Part #	Gender	No	Location	Part #	Gender
CT_Out	Rear_Vehicle	560478	female	L81.A	DPFDoor	562835	female
EI	EngineCmpt.	563739	male	L81.B	DFPDoor	562834	male
L1A	EngineCmpt.	562848	male	L82A	EngineDoor	562348	female
L10	Dash	561247	male	L83A	EngineDoor	562348	female
L16.A	FrontRoof	562615	female	L84.	RrRoof	562486	female
L16.B	FrontRoof	562615	female	L85.	RrRoof	562486	female
L17.A	FrontRoof	562615	female	L86.	RrRoof	562486	female
L17.B	FrontRoof	562615	female	L87.	RrRoof	562486	female
L18.A	EntraceDoor	561626	female	L88.	RrRoof	562486	female
L18.B	EntraceDoor	561626	female	L89.	RrRoof	562486	female
L21.	OutsideFront	560605	female	L90.	RrRoof	562486	female
L22.	OutsideFront	560605	female	L91A	RearVehiculeLH	562601	male
L23.	OutsideFront	560605	female	L92A	RearVehicleRH	562601	male
L24.	OutsideFront	560605	female	L93.A	RearOutsideLH	563069	female
L25.	OutsideFront	560605	female	L93.B	RearOutsideLH	563069	female
L26.	OutsideFront	560605	female	L94.A	RearOutsideRH	563069	female
L27.	OutsideFront	560605	female	L94.B	RearOutsideRH	563069	female
L59	OutsidefrontRH	562623	male	L95	Outside_Front_LH	562902	female
L59A	OutsideFrontRH	563366	male	L96	Outside_Front_RH	562902	female
L59B	OutsideFrontRH	562623	male	L97.A	Outside_Front_LH	563069	female
L60	OutsideFrontLH	562623	male	L97.B	Outside_Front_LH	563069	female
L60A	OutsideFrontLH	563366	male	L98.A	EntraceDoor	563069	female
L60B	OutsideFrontLH	562623	male	L98.B	EntraceDoor	563069	female
L61	OutsideFrontRH	562601	male	L120	DriverSeat	562237	female
L62	OutsideFrontLH	562601	male	L173	EngineCmpt.	563590	female
L63	FrontSideRH	562155	male	L174A	EngineCmpt.	563590	female
L64	OutsideFrontRH	562155	male	L176	3rd_Lugg_Cmpt	561247	male
L65	FrontSideLH	562155	male	L177	3rd_Lugg_Cmpt	561247	male
L66	OutsideFrontLH	562155	male	L178	4thLuggCmpt.	561247	male
L67	3rdLuggCmpt.	562155	male	L179	4thLuggCmpt.	561247	male
L68	3rdLuggCmpt.	562155	male	L180	2nd_Lugg_Cmpt	561247	male
L69	EvapCmpt.	562155	male	L181	2nd_Lugg_Cmpt	561247	male
L70	EvapCmpt.	562155	male	L182	1st_Lugg_Cmpt	561247	male
L71A	RearVehicleLH	562601	male	L183	1st_Lugg_Cmpt	561247	male
L72	Rear_VehicleLH	562155	male	L184	ServiceCmpt.	561247	male
L73A	RearVehicleRH	562601	male	L185.A	Dash	561539	male
L74	RearVehicleRH	562155	male	L185.B	Dash	561539	male
L75	RearVehicleLH	562155	male	L186.A	Dash	561539	male
L76	RearVehicleRH	562155	male	L186.B	Dash	561539	male
L77A	RearVehicleRH	562601	male	L187	Engine_Cmpt	561690	male
L78A	RearVehicleRH	562601	male	L193.A	Dash	560488	female
L79A	RearVehicleLH	562601	male	L193.B	Dash	560488	female
L80A	RearVehicleLH	562601	male	L194.A	Dash	562019	female

CONNECTORS LIST

No	Location	Part #	Gender	No	Location	Part #	Gender
L194.B	Dash	560488	female	Mo24	RH_Console	562348	female
L195.A	Dash	560488	female	Mo25	RH_Console	562348	female
L195.B	Dash	560488	female	Mo26	EntraceDoor	564161	male
L199	EngineCmpt.	562848	male	Mo27	Cond_Cmpt	563691	male
L203	RH_Console	561690	male	Mo28	Cond_Cmpt	563691	male
L204	WCL_Upper_Door	562803	male	Mo29	RJB	563590	female
L205	EvapCmpt.	562485	male	Mo30	1stLuggCmpt.LH	564161	male
L206	WCL_Upper_Door	562803	male	Mo31	1stLuggCmpt.RH	564161	male
L207.A	WCL_System	561699	female	Mo32	2ndLuggCmpt.LH	564161	male
L207.B	WCL_System	561701	female	Mo33	2ndLuggCmpt.RH	564161	male
L207.C	WCL_System	561701	female	Mo34	3rdLuggCmpt.LH	564161	male
L207.D	WCL_System	561699	female	Mo35	3rdLuggCmpt.RH	564161	male
L207.E	WCL_System	561701	female	Mo36	CompressorDoor	564161	male
L207.F	WCL_System	561699	female	Mo37	4thLuggCmpt.RH	564161	male
L207.G	WCL_System	561699	female	Mo38	4thLuggCmpt.LH	564161	male
L207.H	WCL_System	560926	female	Mo40	1stLuggCmpt.LH	561477	female
L207.I	WCL_System	560926	female	Mo41	2ndLuggCmpt.LH	561477	female
L282	Preheater_Cmpt	561690	male	Mo42	3rdLuggCmpt.LH	561477	female
L285.A	Rear_Vehicle	562835	female	Mo43	3rdLuggCmpt.LH	561477	female
L285.B	Rear_Vehicle	562834	male	Mo50	FrontAxleCmpt.	561690	male
L286.A	Rear_Vehicle	562835	female	Mo54	Service_Cmpt	562474	male
L286.B	Rear_Vehicle	562834	male	Mo55	EntraceDoor	563626	male
L298A	EngineCmpt.	563590	female	Mo65	EngineCmpt.	568089	male
L304	OutsideLuggDoorLH	562155	male	Mo67	EngineCmpt.	568089	male
L305	OutsideLuggDoorRH	562155	male	Mo68	EngineCmpt.	568089	male
L306	Radiator_Door	562155	male	Mo69	EngineCmpt.	568089	male
L307	Radiator_Door	562155	male	Mo70	EngineCmpt.	568089	male
L309	RJB	561247	male	Mo71	EngineCmpt.	568089	male
L350A.A	RearAxleCmpt.	564552	male	Mo72	EngineCmpt.	568089	male
L350A.B	RearAxleCmpt.	563340	male	Mo73	EngineCmpt.	568089	male
L350A.C	RearAxleCmpt.	562251	male	MoSO1	FrontSlideOut	562350	male
Mo3	Dash	561667	female	MoSO2	RearSlideOut	562350	male
Mo4	Dash	564161	male	PC1	CantrackCable	562650	male
Mo7	Cond_Cmpt	563691	male	PC1	CantrackCable	562649	female
Mo8	Cond_Cmpt	563691	male	R1.A	RJB	562486	female
Mo11	CondensorCmpt.	568089	male	R3	RJB	563409	male
Mo12	Engine_Cmpt	561690	male	R6	Dash	564496	male
Mo15.	FrCeling	563517	female	R7	Dash	564496	male
Mo16.	FrCeling	563517	female	R12	Evap_Cmpt	563409	male
Mo17	RH_Console	563626	male	R21	FJB	560525	male
Mo19	Fr_Service_Door	562474	male	R27	Dash	564496	male
Mo20	Fr_Service_Door	562474	male	R29	RJB	563409	male
Mo22	RH_Console	561186	male	R30	FJB	564496	male

CONNECTORS LIST

No	Location	Part #	Gender	No	Location	Part #	Gender
R31	FJB	564496	male	Se23	EngineCmpt.	563159	female
R34	RJB	564210	male	Se23A	EngineCmpt.	563159	female
R35	RJB	564210	male	Se24	EngineCmpt.	563758	female
R36	Dash	564496	male	Se24A	EngineCmpt.	563758	female
R37	Dash	564496	male	Se25	EvapCmpt.	561248	female
R38	FJB	564496	male	Se29	Engine_Cmpt	561566	female
R47	WCL_System	564496	male	Se30	EngineCmpt.	562877	female
R167	RH_Console	564496	male	Se31	EngineCmpt.	562877	female
Res3	ParcelRack	563590	female	Se32	Rear_Axle_Cmpt	562426	male
Res4	RH_Console	563590	female	Se33	Rear_Axle_Cmpt	562856	male
Res6	FJB	563590	female	Se34	Rear_Axle_Cmpt	562426	male
Res7	Dashboard	563590	female	Se35	Rear_Axle_Cmpt	562426	male
Res15	Engine_Cmpt	561782	male	Se36	Rear_Axle_Cmpt	562427	male
Res19	FJB	563590	female	Se37	Front_Axle_LH	641132	female
Res20	FJB	563590	female	Se38	Front_Axle_RH	641132	female
Res31	UreaCmpt.	562350	male	Se39	Rear_Axle_LH	641132	female
Res32	UreaCmpt.	563764	female	Se40	Rear_Axle_LH	641132	female
Res46	Rear_Axle	563590	female	Se45	ServiceCmpt.	563409	male
Res53.A	CondensorCmpt.	563590	female	Se46	RearAxleCmpt.	562348	female
Res99	Dash	563590	female	Se49	EngineCmpt.	561690	male
RSO1_1	SlideOutPanel	564496	male	Se51	DriverSeat	563589	male
RSO1_2	SlideOutPanel	564496	male	Se53	Service_Cmpt	563159	female
RSO2_1	SlideOutPanel	564496	male	Se54	Service_Cmpt	563159	female
RSO2_2	SlideOutPanel	564496	male	Se55	Service_Cmpt	563159	female
Se2	FJB	561566	female	Se56	WCLcompt.	562884	female
Se11.A	Cond_Cmpt	560082	female	Se57	Pneumatic Panel	563159	female
Se11.B	Cond_Cmpt	560082	female	Se60	Service_Cmpt	563409	male
Se11.C	Cond_Cmpt	560082	female	Se62	WCL_system	561690	male
Se13	Engine_Cmpt	562350	male	Se63	RearAxleCmpt.	641132	female
Se14.A	Driver_Area	561782	male	Se64	RearAxleCmpt.	641132	female
Se14.B	Driver_Area	561781	female	Se65	Dash	564042	female
Se15.A	EntraceDoor	560488	female	Se66	FrontAxleCmpt.	564039	female
Se15.B	EntraceDoor	560488	female	Se67	ServiceCmpt.	563159	female
Se15.C	EntraceDoor	560488	female	Se69	ServiceCmpt.	563159	female
Se16.A	EntraceDoor	562651	female	Se89	EngineCmpt	562350	male
Se16.B	EntraceDoor	562651	female	Se94	WCL_system	562877	female
Se17.A	EntraceDoor	562291	female	Se100	WCL_Upper_Door	562479	female
Se17.B	EntraceDoor	562291	female	SESO1	SlideOutPanel	563159	female
Se17.C	EntraceDoor	562291	female	SESO2_SESO3	Frontslideout	562479	female
Se18	ServiceCmpt.	561566	female	SESO5_SESO6	Rearslideout	562479	female
Se19_P	Service_Cmpt	563677	male	So3	RHConsole	641385	male
Se19_S	Service_Cmpt	563677	male	So7	Service_Cmpt	561566	female
Se20.	Front_Axle_Cmpt	562426	male	So8	ServiceCmpt.	641385	male
Se21	Dash	561248	female	So9	EngineCmpt.	560016	female

CONNECTORS LIST

No	Location	Part #	Gender	No	Location	Part #	Gender
So11	Cond_Cmpt	561566	female	Sw18A	LH_Console	562763	male
So13	Evap_Cmpt	563204	female	Sw20	Dashboard	562763	male
So17	Service_Cmpt	562848	male	Sw24	Dash	562763	male
So21	Front_Axle_Cmpt	564046	female	Sw24A	Dash	562763	male
So22	Front_Axle_Cmpt	564046	female	Sw34	Dash	562763	male
So23	Rear_Axle_Cmpt	564046	female	Sw35	LHConsole	562763	male
So24	Rear_Axle_Cmpt	564046	female	Sw38	LH_Console	562763	male
So27	RearAxleCmpt.	564045	female	Sw40	LH_Console	561690	male
So28	ServiceCmpt.	641385	male	Sw41	LH_Console	562749	male
So29	ServiceCmpt.	641385	male	Sw42	WCL_System	561636	female
So30	ServiceCmpt.	641385	male	Sw44.A	ServiceCmpt.	562403	female
So31	ServiceCmpt.	641385	male	Sw45.A	3rd_Lugg_Cmpt	562403	female
So32	ServiceCmpt.	641385	male	Sw45.B	3rdLuggCmpt.	562403	female
So36	EngineCmpt.	561690	male	Sw46.A	3rd_Lugg_Cmpt	562403	female
So50	RearAxleCmpt.	564046	female	Sw46.B	3rdLuggCmpt.	562403	female
So52	FrontAxleCmpt.	564045	female	Sw46A.A	3rd_RH_Lugg_Cmpt	562403	female
spBar4	EngineCmpt.	564135	male	Sw46A.B	3rd_RH_Lugg_Cmpt	562403	female
spBar5	EngineCmpt.	564135	male	Sw47.A	4thLuggCmpt.	562403	female
spBar6	EngineCmpt.	564135	male	Sw47.B	4thLuggCmpt.	562403	female
spBar7	CondCmpt.	564135	male	Sw48.A	4thLuggCmpt.	562403	female
spBar11	EngineCmpt.	564135	male	Sw48.B	4thLuggCmpt.	562403	female
spBar12	EngineCmpt.	564135	male	Sw49.A	2nd_Lugg_Cmpt	562403	female
spBar13	EngineCmpt.	564135	male	Sw49.B	2ndLuggCmpt.	562403	female
spBar14	EngineCmpt.	564135	male	Sw50.A	2nd_Lugg_Cmpt	562403	female
spBar15	EngineCmpt.	564135	male	Sw51.A	1st_Lugg_Cmpt	562403	female
spBar16	EngineCmpt.	564135	male	Sw52.A	1st_Lugg_Cmpt	562403	female
spBar19	CondCmpt.	564135	male	Sw58.A	EngineCmpt.	563135	male
spBar20	CondCmpt.	564135	male	Sw59	EngineCmpt.	563135	male
spBar21	CondCmpt.	564135	male	Sw63A	LHConsole	562763	male
spBar22	EngineCmpt.	564135	male	Sw64.A	ServiceCmpt.	560815	female
spBar23	EngineCmpt.	564135	male	Sw64.B	Ssp	560815	female
spBar24	EngineCmpt.	564135	male	Sw82	RJB	563135	male
spBar26	Rr_Axle_Cmpt	564135	male	Sw83.A	Dash	560082	female
spBar27	Rr_Axle_Cmpt	564135	male	Sw83.B	Dash	560815	female
Sw1.C258	Driver_Area	561188	female	Sw83.C	Dash	560082	female
Sw1.C259	Driver_Area	561186	male	Sw83.D	Dash	560815	female
Sw2	Dash	562763	male	Sw85	LH_Console	562749	male
Sw3	Dash	562763	male	Sw99	Dash	562763	male
Sw4	Dash	562763	male	Sw102	Dash	562763	male
Sw6	Dash	562763	male	Sw103A	LHConsole	562763	male
Sw14	Dash	562763	male	Sw104	Dash	562763	male
Sw16	Dash	562763	male	Sw107.A	LHConsole	561457	female
Sw17	Dash	562763	male	Sw107.B	LHConsole	561457	female

CONNECTORS LIST

No	Location	Part #	Gender	No	Location	Part #	Gender
Sw107.C	LHConsole	561457	female	VECR4	RJB	563182	male
Sw107.D	LHConsole	561457	female	VECR9	RJB	563448	male
Sw107.E	LHConsole	561457	female	VECR10	RJB	563181	male
Sw107.F	LHConsole	561457	female	VECR11	RJB	563184	male
Sw107.G	LHConsole	561457	female	VECR12	RJB	563187	male
Sw107.H	LHConsole	561457	female	VECT2	Rear_Vehicle	563716	male
Sw107.J	LHConsole	561457	female	VECT3	RearVehicle	563718	male
Sw107.K	LHConsole	561457	female	VECT4	RearVehicle	563714	male
Sw108	LHConsole	562763	male	Y80	Engine_Cmpt	563789	male
Sw109.A	1st_Lugg_LH	560079	female	Y81	Cond_Cmpt	563793	male
Sw109.B	1st_Lugg_LH	560079	female				
Sw110.A	1st_Lugg_RH	560079	female				
Sw110.B	1st_Lugg_RH	560079	female				
Sw111.A	2ndLuggCmpt.	560079	female				
Sw111.B	2ndLuggCmpt.	560079	female				
Sw112.A	2ndLuggCmpt.	560079	female				
Sw112.B	2ndLuggCmpt.	560079	female				
Sw113.A	2ndLuggCmpt.	560079	female				
Sw113.B	2ndLuggCmpt.	560079	female				
Sw114.A	3rd_Lugg_RH	560079	female				
Sw114.B	3rd_Lugg_RH	560079	female				
Sw115.A	Compr_Door	560079	female				
Sw115.B	Compr_Door	560079	female				
Sw122	ServiceCmpt.	562763	male				
Sw137	Dash	562763	male				
Sw156	LH_Console	562763	male				
Sw157	Dash	562763	male				
Sw158	Dash	562763	male				
SwSo1	FrontSlideOut	561552	female				
SwSo2	RearSlideOut	561552	female				
Term106	RJB	{part_no564189}	N/A				
Term107	RJB	{part_no564189}	N/A				
VECF1	FJB	563186	male				
VECF2	FJB	563183	male				
VECF3	FJB	563185	male				
VECF4	FJB	563182	male				
VECF9	FJB	563448	male				
VECF10	FJB	563181	male				
VECF11	FJB	563184	male				
VECF12	FJB	563187	male				
VECR1	RJB	563186	male				
VECR2	RJB	563183	male				
VECR3	RJB	563185	male				

CONNECTORS LIST

No	Location	Part #	Gender	No	Location	Part #	Gender
A1	RJB	563975	male	A81CN3A	FJB	564741	male
A2	FJB	563984	male	A81CN3B	FJB	564742	male
A3	Dash	562363	male	A83	Parcelrack	565970	female
A4.A	Service_Cmpt	562428	female	A96	FJB	564205	male
A4.B	Service_Cmpt	561188	female	A97	Dash	563226	male
A5	Service_Cmpt	562428	female	A97A	Dash	563226	male
A6	Engine_Cmpt	562427	male	A97A	Dash	563613	female
A7	Rear_Axle_Cmpt	563979	male	A97B	Dash	563226	male
A9.Cx1	FJB	564041	female	A97B	Dash	563613	female
A9.Cx2	FJB	563678	male	A99	FJB	564205	male
A9.Cx3	FJB	564037	female	A100	Front_Axle_Cmpt	563632	male
A9.Cx4	FJB	564038	female	A101	Rr_Axle_Cmpt	563632	male
A14.A	Dash	562766	male	A102	Rr_Axle_Cmpt	563632	male
A14.B	Dash	562767	male	A103	Dash	562070	female
A14.C	Dash	562765	male	A106	FrontVehicle	565974	male
A15	Dash	562464	male	A114A	Dash	564252	male
A18.J1	FJB	562794	male	A130	Driver_Area	563226	male
A18.J2	FJB	562650	male	A131.A	Engine_Cmpt	561782	male
A24.A	RH_Console	561890	male	A131.B	Engine_Cmpt	561781	female
A24.B	RH_Console	561566	female	A137A	CondensorCmpt.	20429843	male
A24.C	RH_Console	561889	female	A138	Cond_Cmpt	563787	male
A27	Service_Cmpt	562929	male	A139	Dash	564501	male
A28	Service_Cmpt	562928	male	AE41.J1	FJB	563679	male
A30.A	Dash	561611	male	AE41.J2	FJB	564037	female
A30.C	Dash	561889	female	AE41.J3	FJB	564004	male
A31.J1	Dash	562780	male	AE42.J1	FJB	563679	male
A31.J2	Dash	562842	male	AE42.J2	FJB	564037	female
A31.J3	Dash	562464	male	AE42.J3	FJB	564004	male
A31.J4	Dash	562465	male	AE43.J1	FJB	563679	male
A31.J5	Dash	563071	male	AE43.J2	FJB	564037	male
A34.J	EngineCmpt.	568118	male	AE43.J3	FJB	565957	male
A34.K	EngineCmpt.	564270	male	AE44.J1	FJB	563679	male
A34.L	EngineCmpt.	564269	male	AE44.J2	FJB	564037	female
A36.JA	FJB	562767	male	AE44.J3	FJB	565957	male
A36.JB	FJB	562765	male	AE45.J1	FJB	563679	male
A36.JC	FJB	562957	male	AE45.J2	FJB	564037	female
A40.A	FJB	561668	male	AE45.J3	FJB	565957	male
A77	Parcelrack	564547	male	AE46.J1	FJB	563679	male
A78	Parcelrack	562583	female	AE46.J2	FJB	564037	female
A79	Parcelrack	562583	female	AE46.J3	FJB	565957	male
A80	Parcelrack	562479	female	AE47.J1	RHConsole	563679	male
A81CN1	FJB	562767	male	AE47.J2	RHConsole	564037	female

CONNECTORS LIST

No	Location	Part #	Gender	No	Location	Part #	Gender
AE47.J3	RHConsole	565957	male	AltUR.C	EngineCmpt.	564469	female
AE48.J1	RHConsole	563679	male	B85	Engine_Cmpt	563815	male
AE48.J2	RHConsole	564037	female	B96	Engine_Cmpt	563821	male
AE48.J3	RHConsole	565957	male	B96B	Engine_Cmpt	563823	male
AE49.J1	RJB	563679	male	B97	Engine_Cmpt	563816	male
AE49.J2	RJB	564037	male	B98	Engine_Cmpt	563817	male
AE49.J3	RJB	565957	male	B99	Engine_Cmpt	563815	male
AE50.J1	RJB	563679	male	B115A	EngineCmpt.	564226	male
AE50.J2	RJB	564037	male	B142C	CondensorCmpt.	563515	male
AE50.J3	RJB	565957	male	B310	EngineCmpt.	565967	male
AE51.J1	RJB	563679	male	C1	FJB	563589	male
AE51.J2	RJB	564037	female	C1	FJB	563590	female
AE51.J3	RJB	565957	male	C1S	FJB	563589	male
AE52.J1	RJB	563679	male	C1S	FJB	563590	female
AE52.J2	RJB	564037	female	C2	Service_Cmpt	563580	male
AE52.J3	RJB	565957	male	C2	Service_Cmpt	563581	female
AE54.J1	EvaporatorCmpt.	563679	male	C2A	FJB	563580	male
AE54.J2	EvaporatorCmpt.	564037	female	C2A	FJB	563581	female
AE54.J3	EvaporatorCmpt.	565957	male	C2B	FJB	564034	male
AE55.J1	Dash	563679	male	C2B	FJB	564035	female
AE55.J2	Dash	564037	female	C3_plug	RJB	563589	male
AE55.J3	Dash	564004	male	C3_socket	RJB	563590	female
AE56.J1	Dash	563679	male	C3S	RJB	563593	male
AE56.J2	Dash	564037	male	C3S	RJB	563590	female
AE56.J3	Dash	564004	male	C4	FJB	563580	male
AE57.J1	3rd_RH_Lugg_Cmpt	563679	male	C4	FJB	563581	female
AE57.J2	3rd_RH_Lugg_Cmpt	564037	male	C5	FJB	563589	male
AE57.J3	3rd_RH_Lugg_Cmpt	564004	male	C5	FJB	563590	female
AE58.J1	SlideoutPanel	563679	male	C5S	FJB	563589	male
AE58.J2	SlideoutPanel	564037	male	C5S	FJB	563590	female
AE58.J3	SlideoutPanel	565957	male	C6	FJB	563582	male
AE59.J1	SlideoutPanel	563679	male	C6	FJB	563583	female
AE59.J2	SlideoutPanel	564037	male	C7	Service_Cmpt	562566	male
AE59.J3	SlideoutPanel	565957	male	C7	Service_Cmpt	562565	female
AltLL.A	EngineCmpt.	563746	female	C8	FJB	563227	male
AltLL.B	EngineCmpt.	560815	female	C8	FJB	563614	female
AltLL.C	EngineCmpt.	564469	female	C9	RJB	561986	male
AltUL.A	EngineCmpt.	563746	female	C9	RJB	561987	female
AltUL.B	EngineCmpt.	560815	female	C10	Engine_Cmpt	562477	male
AltUL.C	EngineCmpt.	564469	female	C10	Engine_Cmpt	562479	female
AltUR.A	EngineCmpt.	563746	female	C11	Service_Cmpt	563580	male
AltUR.B	EngineCmpt.	560815	female	C11	Service_Cmpt	563581	female

CONNECTORS LIST

No	Location	Part #	Gender	No	Location	Part #	Gender
C12	Engine_Cmpt	562581	male	C45	FJB	561642	female
C12	Engine_Cmpt	562583	female	C46	WCL_System	562549	male
C13_plug	RH_Console	563589	male	C46	WCL_System	562550	female
C13_socket	RH_Console	563590	female	C49	FJB	562005	male
C13S	RH_Console	563589	male	C49	FJB	561714	female
C13S	RH_Console	563590	female	C50	RJB	563931	male
C14	FrontVehicle	562581	male	C50	RJB	563930	female
C14	FrontVehicle	562583	female	C52	EvaporatorCmpt.	563618	male
C15A	Evap_Cmpt	568110	male	C52	EvaporatorCmpt.	563616	female
C15A	Evap_Cmpt	568109	female	C54	EngineCmpt.	563226	male
C17	RJB	560195	male	C54	EngineCmpt.	563613	female
C17	RJB	560169	female	C54A	EngineCmpt.	568110	male
C18	FJB	561986	male	C54A	EngineCmpt.	568109	female
C18	FJB	561987	female	C54B	EngineCmpt.	563589	male
C19	RJB	561986	male	C54B	EngineCmpt.	563590	female
C19	RJB	561987	female	C58	CondensorCmpt.	564567	male
C23	Evap_Cmpt	564034	male	C58	CondensorCmpt.	564568	female
C23	Evap_Cmpt	564035	female	C58A	CondensorCmpt.	564258	male
C24_plug	Evap_Cmpt	561690	male	C58A	CondensorCmpt.	566037	female
C24_socket	Evap_Cmpt	561566	female	C59	3rdLuggCmpt.	561643	male
C26	UreaCmpt.	563226	male	C59	3rdLuggCmpt.	561642	female
C26	UreaCmpt.	563613	female	C61	Fr_Service_Door	561669	male
C26A	UreaCmpt.	568110	male	C61	Fr_Service_Door	561670	female
C26A	UreaCmpt.	568109	female	C62	Fr_Service_Door	562566	male
C26B	UreaCmpt.	563227	male	C62	Fr_Service_Door	562565	female
C26B	UreaCmpt.	563614	female	C64	EngineCmpt.	568110	male
C29	WCL_System	563651	male	C64	EngineCmpt.	568109	female
C29	WCL_System	563652	female	C71	FJB	561646	male
C30	WCL_System	561710	male	C71	FJB	561645	female
C30	WCL_System	561709	female	C72	FJB	561646	male
C32W	3rd_RH_Lugg_Cmpt	561640	male	C72	FJB	561645	female
C32W	3rd_RH_Lugg_Cmpt	561639	female	C74	FJB	561645	female
C33	3rd_RH_Lugg_Cmpt	564034	male	C74	FJB	561646	male
C33	3rd_RH_Lugg_Cmpt	564035	female	C80	EvaporatorCmpt.	562477	male
C34	RH_Console	561986	male	C80	EvaporatorCmpt.	562479	female
C34	RH_Console	561987	female	C81	1st_Lugg_Cmpt	562477	male
C39A	EngineCmpt.	561782	male	C81	1st_Lugg_Cmpt	562479	female
C39A	EngineCmpt.	561781	female	C82	1st_Lugg_Cmpt	562477	male
C40	Dash	562485	male	C82	1st_Lugg_Cmpt	562479	female
C40	Dash	562486	female	C83	2nd_Lugg_Cmpt	562477	male
C44_plug	FJB	561577	male	C83	2nd_Lugg_Cmpt	562479	female
C44_socket	FJB	561605	female	C84	2nd_Lugg_Cmpt	562477	male
C45	FJB	561643	male	C84	2nd_Lugg_Cmpt	562479	female

CONNECTORS LIST

No	Location	Part #	Gender	No	Location	Part #	Gender
C85	4rd_Lugg_Cmpt	562477	male	C121	EngineDoor	562565	female
C85	4rd_Lugg_Cmpt	562479	female	C122	EngineDoor	562566	male
C86	4rd_Lugg_Cmpt	563618	male	C122	EngineDoor	562565	female
C86	4rd_Lugg_Cmpt	563616	female	C130	Dash	562583	female
C87	EngineCmpt.	562485	male	C131A	EngineCmpt.	561782	male
C87	EngineCmpt.	562486	female	C131A	EngineCmpt.	561781	female
C88	3rd_RH_Lugg_Cmpt	563618	male	C131B	EngineCmpt.	561782	male
C88	3rd_RH_Lugg_Cmpt	563616	female	C131B	EngineCmpt.	561781	female
C89	CondensorCmpt.	562477	male	C132	RHConsol	561515	male
C89	CondensorCmpt.	562479	female	C132	RHConsol	561552	female
C91	RJB	562285	male	C133	Dash	561986	male
C91	RJB	562282	female	C133	Dash	561987	female
C92A	EngineCmpt.	563226	male	C133A	RH Console	561986	male
C92A	EngineCmpt.	563613	female	C133A	RH Console	561987	female
C92C	EngineCmpt.	562581	male	C134_plug	Dash	561577	male
C92C	EngineCmpt.	562583	female	C134_socket	Dash	561605	female
C94_plug	FJB	563589	male	C152	Cond_Cmpt	561611	male
C94_socket	FJB	563590	female	C152	Cond_Cmpt	561610	female
C96	FJB	561643	male	C158	CondensorCmpt.	562477	male
C96	FJB	561642	female	C158	CondensorCmpt.	562479	female
C97	FJB	561643	male	C159	CondensorCmpt.	566033	male
C97	FJB	561642	female	C159	CondensorCmpt.	566034	female
C100	EvaporatorCmpt.	562477	male	C170	LH_Console	561637	male
C100	EvaporatorCmpt.	562479	female	C170	LH_Console	561636	female
C100S	EvaporatorCmpt.	562477	male	C171	LH_Console	561646	male
C100S	EvaporatorCmpt.	562479	female	C171	LH_Console	561645	female
C101	Service_Cmpt	561690	male	C172	LHConsole	561637	male
C101	Service_Cmpt	561566	female	C172	LHConsole	561635	female
C102A	CondensorCmpt.	563226	male	C193_plug	RJB	563589	male
C102A	CondensorCmpt.	563613	female	C193_socket	RJB	563590	female
C104S_plug	3rdLuggCmpt.	563589	male	C194	FJB	563589	male
C104S_socket	3rdLuggCmpt.	563590	female	C194	FJB	563590	female
C105_plug	FJB	562581	male	C195	Dash	563347	male
C105_socket	FJB	562583	female	C195	Dash	560489	female
C106_plug	FJB	562581	male	C222	FJB	562477	male
C106_socket	FJB	562583	female	C222	FJB	562479	female
C110	PneumPanel	568110	male	C223	FJB	563227	male
C110	PneumPanel	568109	female	C223	FJB	563614	female
C114	3rd_RH_Lugg_Cmpt	561550	male	C224	FJB	561637	male
C114	3rd_RH_Lugg_Cmpt	561667	female	C224	FJB	561636	female
C119A	EngineDoor	568110	male	C225	FJB	562650	male
C119A	EngineDoor	568109	female	C225	FJB	562649	female
C121	EngineDoor	562566	male	C226	FJB	562650	male
				C226	FJB	562649	female

CONNECTORS LIST

No	Location	Part #	Gender	No	Location	Part #	Gender
C228	EngineCmpt.	562477	male	C562	3rdLuggCmpt.	561477	female
C228	EngineCmpt.	562479	female	C606_plug	FJB	561690	male
C242	ServiceCmpt.	562789	male	C606_socket	FJB	561566	female
C242	ServiceCmpt.	565131	female	C606A	FJB	561690	male
C243.	ServiceCmpt.	562789	male	C606A	FJB	561566	female
C243.	ServiceCmpt.	565131	female	C606B	FJB	561690	male
C266	EntraceDoor	561640	male	C606B	FJB	561566	female
C266	EntraceDoor	561639	female	C607_plug	FJB	561577	male
C279	Service_Cmpt	562477	male	C607_socket	FJB	561605	female
C279	Service_Cmpt	562479	female	C607A	FJB	561577	male
C290	Rear_Vehicle	562477	male	C607A	FJB	561605	female
C290	Rear_Vehicle	562479	female	C607B	FJB	561577	male
C304	2ndLuggCmpt.	560852	male	C607B	FJB	561605	female
C304	2ndLuggCmpt.	560851	female	C617	Mirror_LH	563801	male
C305	2ndLuggCmpt.	560852	male	C617	Mirror_LH	563800	female
C305	2ndLuggCmpt.	560851	female	C618	Mirror_RH	563801	male
C380A	Dash	564222	male	C618	Mirror_RH	563800	female
C380A	Dash	564224	female	C_ALT	EngineCmpt.	562581	male
C397	RJB	562285	male	C_ALT	EngineCmpt.	562583	female
C397	RJB	562282	female	C_ALT3	EngineCmpt.	562477	male
C463	EngineCmpt.	568112	male	C_ALT3	EngineCmpt.	562479	female
C463	EngineCmpt.	568111	female	C_Mo9	Evap_Cmpt	561577	male
C464A	RJB	564222	male	C_Mo9	Evap_Cmpt	561605	female
C464A	RJB	564224	female	C_Se51	FJB	563589	male
C551	3rdLuggCmpt.	561476	male	C_Se51	FJB	563590	female
C551	3rdLuggCmpt.	561477	female	CCust	RJB	562477	male
C553	2ndLuggCmpt.	561476	male	CCust	RJB	562479	female
C553	2ndLuggCmpt.	561477	female	CF167	RH_Console	562350	male
C554	1stLuggCmpt.	561476	male	CF167	RH_Console	563764	female
C554	1stLuggCmpt.	561477	female	CInt1	FJB	563227	male
C555	1stLuggCmpt.	561476	male	CInt1	FJB	563614	female
C555	1stLuggCmpt.	561477	female	CInt2	FJB	563226	male
C556	3rdLuggCmpt.	561476	male	CInt2	FJB	563613	female
C556	3rdLuggCmpt.	561477	female	CSo1	SlideOutPanel	562581	male
C557	2ndLugg.Cmpt.	561476	male	CSo1	SlideOutPanel	562583	female
C557	2ndLuggCmpt.	561477	female	CSo2	SlideOutPanel	561643	male
C559	3rdLuggCmpt.	561476	male	CSo2	SlideOutPanel	561641	female
C559	3rdLuggCmpt.	561477	female	CSo5	SlideOutPanel	561847	male
C560	3rdLuggCmpt.	561476	male	CSo5	SlideOutPanel	561862	female
C560	3rdLuggCmpt.	561477	female	CSo7	SlideOutPanel	562581	male
C561	3rdLuggCmpt.	561476	male	CSo7	SlideOutPanel	562583	female
C561	3rdLuggCmpt.	561477	female	CT_In	Rear_Vehicle	563582	male
C562	3rdLuggCmpt.	561476	male	CT_In	Rear_Vehicle	563583	female

CONNECTORS LIST

No	Location	Part #	Gender	No	Location	Part #	Gender
CT_Out	Rear_Vehicle	560478	female	L81.A	DPFDoor	562835	female
EI	EngineCmpt.	563739	male	L81.B	DFPDoor	562834	male
L1A	EngineCmpt.	562848	male	L82A	EngineDoor	562348	female
L10	Dash	561247	male	L83A	EngineDoor	562348	female
L16.A	FrontRoof	562615	female	L84.	RrRoof	562486	female
L16.B	FrontRoof	562615	female	L85.	RrRoof	562486	female
L17.A	FrontRoof	562615	female	L86.	RrRoof	562486	female
L17.B	FrontRoof	562615	female	L87.	RrRoof	562486	female
L18.A	EntraceDoor	561626	female	L88.	RrRoof	562486	female
L18.B	EntraceDoor	561626	female	L89.	RrRoof	562486	female
L21.	OutsideFront	560605	female	L90.	RrRoof	562486	female
L22.	OutsideFront	560605	female	L91A	RearVehiculeLH	562601	male
L23.	OutsideFront	560605	female	L92A	RearVehicleRH	562601	male
L24.	OutsideFront	560605	female	L93.A	RearOutsideLH	563069	female
L25.	OutsideFront	560605	female	L93.B	RearOutsideLH	563069	female
L26.	OutsideFront	560605	female	L94.A	RearOutsideRH	563069	female
L27.	OutsideFront	560605	female	L94.B	RearOutsideRH	563069	female
L59	OutsidefrontRH	562623	male	L95	Outside_Front_LH	562902	female
L59A	OutsideFrontRH	563366	male	L96	Outside_Front_RH	562902	female
L59B	OutsideFrontRH	562623	male	L97.A	Outside_Front_LH	563069	female
L60	OutsideFrontLH	562623	male	L97.B	Outside_Front_LH	563069	female
L60A	OutsideFrontLH	563366	male	L98.A	EntraceDoor	563069	female
L60B	OutsideFrontLH	562623	male	L98.B	EntraceDoor	563069	female
L61	OutsideFrontRH	562601	male	L120	DriverSeat	562237	female
L62	OutsideFrontLH	562601	male	L173	EngineCmpt.	563590	female
L63	FrontSideRH	562155	male	L174A	EngineCmpt.	563590	female
L64	OutsideFrontRH	562155	male	L176	3rd_Lugg_Cmpt	561247	male
L65	FrontSideLH	562155	male	L177	3rd_Lugg_Cmpt	561247	male
L66	OutsideFrontLH	562155	male	L178	4thLuggCmpt.	561247	male
L67	3rdLuggCmpt.	562155	male	L179	4thLuggCmpt.	561247	male
L68	3rdLuggCmpt.	562155	male	L180	2nd_Lugg_Cmpt	561247	male
L69	EvapCmpt.	562155	male	L181	2nd_Lugg_Cmpt	561247	male
L70	EvapCmpt.	562155	male	L182	1st_Lugg_Cmpt	561247	male
L71A	RearVehicleLH	562601	male	L183	1st_Lugg_Cmpt	561247	male
L72	Rear_VehicleLH	562155	male	L184	ServiceCmpt.	561247	male
L73A	RearVehicleRH	562601	male	L185.A	Dash	561539	male
L74	RearVehicleRH	562155	male	L185.B	Dash	561539	male
L75	RearVehicleLH	562155	male	L186.A	Dash	561539	male
L76	RearVehicleRH	562155	male	L186.B	Dash	561539	male
L77A	RearVehicleRH	562601	male	L187	Engine_Cmpt	561690	male
L78A	RearVehicleRH	562601	male	L193.A	Dash	560488	female
L79A	RearVehicleLH	562601	male	L193.B	Dash	560488	female
L80A	RearVehicleLH	562601	male	L194.A	Dash	562019	female

CONNECTORS LIST

No	Location	Part #	Gender	No	Location	Part #	Gender
L194.B	Dash	560488	female	Mo24	RH_Console	562348	female
L195.A	Dash	560488	female	Mo25	RH_Console	562348	female
L195.B	Dash	560488	female	Mo26	EntraceDoor	564161	male
L199	EngineCmpt.	562848	male	Mo27	Cond_Cmpt	563691	male
L203	RH_Console	561690	male	Mo28	Cond_Cmpt	563691	male
L204	WCL_Upper_Door	562803	male	Mo29	RJB	563590	female
L205	EvapCmpt.	562485	male	Mo30	1stLuggCmpt.LH	564161	male
L206	WCL_Upper_Door	562803	male	Mo31	1stLuggCmpt.RH	564161	male
L207.A	WCL_System	561699	female	Mo32	2ndLuggCmpt.LH	564161	male
L207.B	WCL_System	561701	female	Mo33	2ndLuggCmpt.RH	564161	male
L207.C	WCL_System	561701	female	Mo34	3rdLuggCmpt.LH	564161	male
L207.D	WCL_System	561699	female	Mo35	3rdLuggCmpt.RH	564161	male
L207.E	WCL_System	561701	female	Mo36	CompressorDoor	564161	male
L207.F	WCL_System	561699	female	Mo37	4thLuggCmpt.RH	564161	male
L207.G	WCL_System	561699	female	Mo38	4thLuggCmpt.LH	564161	male
L207.H	WCL_System	560926	female	Mo40	1stLuggCmpt.LH	561477	female
L207.I	WCL_System	560926	female	Mo41	2ndLuggCmpt.LH	561477	female
L282	Preheater_Cmpt	561690	male	Mo42	3rdLuggCmpt.LH	561477	female
L285.A	Rear_Vehicle	562835	female	Mo43	3rdLuggCmpt.LH	561477	female
L285.B	Rear_Vehicle	562834	male	Mo50	FrontAxleCmpt.	561690	male
L286.A	Rear_Vehicle	562835	female	Mo54	Service_Cmpt	562474	male
L286.B	Rear_Vehicle	562834	male	Mo55	EntraceDoor	563626	male
L298A	EngineCmpt.	563590	female	Mo65	EngineCmpt.	568089	male
L304	OutsideLuggDoorLH	562155	male	Mo67	EngineCmpt.	568089	male
L305	OutsideLuggDoorRH	562155	male	Mo68	EngineCmpt.	568089	male
L306	Radiator_Door	562155	male	Mo69	EngineCmpt.	568089	male
L307	Radiator_Door	562155	male	Mo70	EngineCmpt.	568089	male
L309	RJB	561247	male	Mo71	EngineCmpt.	568089	male
L350A.A	RearAxleCmpt.	564552	male	Mo72	EngineCmpt.	568089	male
L350A.B	RearAxleCmpt.	563340	male	Mo73	EngineCmpt.	568089	male
L350A.C	RearAxleCmpt.	562251	male	MoSO1	FrontSlideOut	562350	male
Mo3	Dash	561667	female	MoSO2	RearSlideOut	562350	male
Mo4	Dash	564161	male	PC1	CantrackCable	562650	male
Mo7	Cond_Cmpt	563691	male	PC1	CantrackCable	562649	female
Mo8	Cond_Cmpt	563691	male	R1.A	RJB	562486	female
Mo11	CondensorCmpt.	568089	male	R3	RJB	563409	male
Mo12	Engine_Cmpt	561690	male	R6	Dash	564496	male
Mo15.	FrCeling	563517	female	R7	Dash	564496	male
Mo16.	FrCeling	563517	female	R12	Evap_Cmpt	563409	male
Mo17	RH_Console	563626	male	R21	FJB	560525	male
Mo19	Fr_Service_Door	562474	male	R27	Dash	564496	male
Mo20	Fr_Service_Door	562474	male	R29	RJB	563409	male
Mo22	RH_Console	561186	male	R30	FJB	564496	male

CONNECTORS LIST

No	Location	Part #	Gender	No	Location	Part #	Gender
R31	FJB	564496	male	Se23	EngineCmpt.	563159	female
R34	RJB	564210	male	Se23A	EngineCmpt.	563159	female
R35	RJB	564210	male	Se24	EngineCmpt.	563758	female
R36	Dash	564496	male	Se24A	EngineCmpt.	563758	female
R37	Dash	564496	male	Se25	EvapCmpt.	561248	female
R38	FJB	564496	male	Se29	Engine_Cmpt	561566	female
R47	WCL_System	564496	male	Se30	EngineCmpt.	562877	female
R167	RH_Console	564496	male	Se31	EngineCmpt.	562877	female
Res3	ParcelRack	563590	female	Se32	Rear_Axle_Cmpt	562426	male
Res4	RH_Console	563590	female	Se33	Rear_Axle_Cmpt	562856	male
Res6	FJB	563590	female	Se34	Rear_Axle_Cmpt	562427	male
Res7	Dashboard	563590	female	Se35	Rear_Axle_Cmpt	562426	male
Res15	Engine_Cmpt	561782	male	Se36	Rear_Axle_Cmpt	562427	male
Res19	FJB	563590	female	Se37	Front_Axle_LH	641132	female
Res20	FJB	563590	female	Se38	Front_Axle_RH	641132	female
Res31	UreaCmpt.	562350	male	Se39	Rear_Axle_LH	641132	female
Res32	UreaCmpt.	563764	female	Se40	Rear_Axle_LH	641132	female
Res46	Rear_Axle	563590	female	Se45	ServiceCmpt.	563409	male
Res53.A	CondensorCmpt.	563590	female	Se46	RearAxleCmpt.	562348	female
Res99	Dash	563590	female	Se49	EngineCmpt.	561690	male
RSO1_1	SlideOutPanel	564496	male	Se51	DriverSeat	563589	male
RSO1_2	SlideOutPanel	564496	male	Se53	Service_Cmpt	563159	female
RSO2_1	SlideOutPanel	564496	male	Se54	Service_Cmpt	563159	female
RSO2_2	SlideOutPanel	564496	male	Se55	Service_Cmpt	563159	female
Se2	FJB	561566	female	Se56	WCLcompt.	562884	female
Se11.A	Cond_Cmpt	560082	female	Se57	Pneumatic Panel	563159	female
Se11.B	Cond_Cmpt	560082	female	Se60	Service_Cmpt	563409	male
Se11.C	Cond_Cmpt	560082	female	Se62	WCL_system	561690	male
Se13	Engine_Cmpt	562350	male	Se63	RearAxleCmpt.	641132	female
Se14.A	Driver_Area	561782	male	Se64	RearAxleCmpt.	641132	female
Se14.B	Driver_Area	561781	female	Se65	Dash	564042	female
Se15.A	EntraceDoor	560488	female	Se66	FrontAxleCmpt.	564039	female
Se15.B	EntraceDoor	560488	female	Se67	ServiceCmpt.	563159	female
Se15.C	EntraceDoor	560488	female	Se69	ServiceCmpt.	563159	female
Se16.A	EntraceDoor	562651	female	Se89	EngineCmpt	562350	male
Se16.B	EntraceDoor	562651	female	Se94	WCL_system	562877	female
Se17.A	EntraceDoor	562291	female	Se100	WCL_Upper_Door	562479	female
Se17.B	EntraceDoor	562291	female	SESO1	SlideOutPanel	563159	female
Se17.C	EntraceDoor	562291	female	SESO2_SESO3	Frontslideout	562479	female
Se18	ServiceCmpt.	561566	female	SESO5_SESO6	Rearslideout	562479	female
Se19_P	Service_Cmpt	563677	male	So3	RHConsole	641385	male
Se19_S	Service_Cmpt	563677	male	So7	Service_Cmpt	561566	female
Se20.	Front_Axle_Cmpt	562426	male	So8	ServiceCmpt.	641385	male
Se21	Dash	561248	female	So9	EngineCmpt.	560016	female

CONNECTORS LIST

No	Location	Part #	Gender	No	Location	Part #	Gender
So11	Cond_Cmpt	561566	female	Sw18A	LH_Console	562763	male
So13	Evap_Cmpt	563204	female	Sw20	Dashboard	562763	male
So17	Service_Cmpt	562848	male	Sw24	Dash	562763	male
So21	Front_Axle_Cmpt	564046	female	Sw24A	Dash	562763	male
So22	Front_Axle_Cmpt	564046	female	Sw34	Dash	562763	male
So23	Rear_Axle_Cmpt	564046	female	Sw35	LHConsole	562763	male
So24	Rear_Axle_Cmpt	564046	female	Sw38	LH_Console	562763	male
So27	RearAxleCmpt.	564045	female	Sw40	LH_Console	561690	male
So28	ServiceCmpt.	641385	male	Sw41	LH_Console	562749	male
So29	ServiceCmpt.	641385	male	Sw42	WCL_System	561636	female
So30	ServiceCmpt.	641385	male	Sw44.A	ServiceCmpt.	562403	female
So31	ServiceCmpt.	641385	male	Sw45.A	3rd_Lugg_Cmpt	562403	female
So32	ServiceCmpt.	641385	male	Sw45.B	3rdLuggCmpt.	562403	female
So36	EngineCmpt.	561690	male	Sw46.A	3rd_Lugg_Cmpt	562403	female
So50	RearAxleCmpt.	564046	female	Sw46.B	3rdLuggCmpt.	562403	female
So52	FrontAxleCmpt.	564045	female	Sw46A.A	3rd_RH_Lugg_Cmpt	562403	female
spBar4	EngineCmpt.	564135	male	Sw46A.B	3rd_RH_Lugg_Cmpt	562403	female
spBar5	EngineCmpt.	564135	male	Sw47.A	4thLuggCmpt.	562403	female
spBar6	EngineCmpt.	564135	male	Sw47.B	4thLuggCmpt.	562403	female
spBar7	CondCmpt.	564135	male	Sw48.A	4thLuggCmpt.	562403	female
spBar11	EngineCmpt.	564135	male	Sw48.B	4thLuggCmpt.	562403	female
spBar12	EngineCmpt.	564135	male	Sw49.A	2nd_Lugg_Cmpt	562403	female
spBar13	EngineCmpt.	564135	male	Sw49.B	2ndLuggCmpt.	562403	female
spBar14	EngineCmpt.	564135	male	Sw50.A	2nd_Lugg_Cmpt	562403	female
spBar15	EngineCmpt.	564135	male	Sw51.A	1st_Lugg_Cmpt	562403	female
spBar16	EngineCmpt.	564135	male	Sw52.A	1st_Lugg_Cmpt	562403	female
spBar19	CondCmpt.	564135	male	Sw58.A	EngineCmpt.	563135	male
spBar20	CondCmpt.	564135	male	Sw59	EngineCmpt.	563135	male
spBar21	CondCmpt.	564135	male	Sw63A	LHConsole	562763	male
spBar22	EngineCmpt.	564135	male	Sw64.A	ServiceCmpt.	560815	female
spBar23	EngineCmpt.	564135	male	Sw64.B	Ssp	560815	female
spBar24	EngineCmpt.	564135	male	Sw82	RJB	563135	male
spBar26	Rr_Axle_Cmpt	564135	male	Sw83.A	Dash	560082	female
spBar27	Rr_Axle_Cmpt	564135	male	Sw83.B	Dash	560815	female
Sw1.C258	Driver_Area	561188	female	Sw83.C	Dash	560082	female
Sw1.C259	Driver_Area	561186	male	Sw83.D	Dash	560815	female
Sw2	Dash	562763	male	Sw85	LH_Console	562749	male
Sw3	Dash	562763	male	Sw99	Dash	562763	male
Sw4	Dash	562763	male	Sw102	Dash	562763	male
Sw6	Dash	562763	male	Sw103A	LHConsole	562763	male
Sw14	Dash	562763	male	Sw104	Dash	562763	male
Sw16	Dash	562763	male	Sw107.A	LHConsole	561457	female
Sw17	Dash	562763	male	Sw107.B	LHConsole	561457	female

CONNECTORS LIST

No	Location	Part #	Gender	No	Location	Part #	Gender
Sw107.C	LHConsole	561457	female	VECR4	RJB	563182	male
Sw107.D	LHConsole	561457	female	VECR9	RJB	563448	male
Sw107.E	LHConsole	561457	female	VECR10	RJB	563181	male
Sw107.F	LHConsole	561457	female	VECR11	RJB	563184	male
Sw107.G	LHConsole	561457	female	VECR12	RJB	563187	male
Sw107.H	LHConsole	561457	female	VECT2	Rear_Vehicle	563716	male
Sw107.J	LHConsole	561457	female	VECT3	RearVehicle	563718	male
Sw107.K	LHConsole	561457	female	VECT4	RearVehicle	563714	male
Sw108	LHConsole	562763	male	Y80	Engine_Cmpt	563789	male
Sw109.A	1st_Lugg_LH	560079	female	Y81	Cond_Cmpt	563793	male
Sw109.B	1st_Lugg_LH	560079	female				
Sw110.A	1st_Lugg_RH	560079	female				
Sw110.B	1st_Lugg_RH	560079	female				
Sw111.A	2ndLuggCmpt.	560079	female				
Sw111.B	2ndLuggCmpt.	560079	female				
Sw112.A	2ndLuggCmpt.	560079	female				
Sw112.B	2ndLuggCmpt.	560079	female				
Sw113.A	2ndLuggCmpt.	560079	female				
Sw113.B	2ndLuggCmpt.	560079	female				
Sw114.A	3rd_Lugg_RH	560079	female				
Sw114.B	3rd_Lugg_RH	560079	female				
Sw115.A	Compr_Door	560079	female				
Sw115.B	Compr_Door	560079	female				
Sw122	ServiceCmpt.	562763	male				
Sw137	Dash	562763	male				
Sw156	LH_Console	562763	male				
Sw157	Dash	562763	male				
Sw158	Dash	562763	male				
SwSo1	FrontSlideOut	561552	female				
SwSo2	RearSlideOut	561552	female				
Term106	RJB	{part_no564189}	N/A				
Term107	RJB	{part_no564189}	N/A				
VECF1	FJB	563186	male				
VECF2	FJB	563183	male				
VECF3	FJB	563185	male				
VECF4	FJB	563182	male				
VECF9	FJB	563448	male				
VECF10	FJB	563181	male				
VECF11	FJB	563184	male				
VECF12	FJB	563187	male				
VECR1	RJB	563186	male				
VECR2	RJB	563183	male				
VECR3	RJB	563185	male				

CONNECTORS LIST

No	Location	Part #	Gender	No	Location	Part #	Gender
A1	RJB	563975	male	A81CN1	FJB	562767	male
A2	FJB	563984	male	A81CN3A	FJB	564741	male
A3	Dash	562363	male	A81CN3B	FJB	564742	male
A4.A	Service_Cmpt	562428	female	A83	Parcelrack	565970	female
A4.B	Service_Cmpt	561188	female	A96	FJB	563678	male
A5	Service_Cmpt	562428	female	A97	Dash	563226	male
A6	Engine_Cmpt	562427	male	A97A	Dash	563226	male
A7	Rear_Axle_Cmpt	563979	male	A97A	Dash	563613	female
A9.Cx1	FJB	564041	female	A97B	Dash	563226	male
A9.Cx2	FJB	563678	male	A97B	Dash	563613	female
A9.Cx3	FJB	564037	female	A99	FJB	564205	male
A9.Cx4	FJB	564038	female	A100.1	Front_Axle_Cmpt	563515	male
A14.A	Dash	562766	male	A100.2	Dash	563515	male
A14.B	Dash	562767	male	A100.3	Rr_Axle_Cmpt	563515	male
A14.C	Dash	562765	male	A106	FrontVehicle	565974	male
A15	Dash	562464	male	A114A	Dash	564252	male
A18.J1	FJB	562794	male	A130	Driver_Area	563226	male
A18.J2	FJB	562650	male	A131.A	Engine_Cmpt	561782	male
A24.A	RH_Console	561890	male	A131.B	Engine_Cmpt	561781	female
A24.B	RH_Console	561566	female	A137A	CondensorCmpt.	20429843	male
A24.C	RH_Console	561889	female	A138	Cond_Cmpt	563787	male
A27	Service_Cmpt	562929	male	A139	Dash	564501	male
A28	Service_Cmpt	562928	male	AE41.J1	FJB	563679	male
A30.A	Dash	561611	male	AE41.J2	FJB	564037	female
A30.C	Dash	561889	female	AE41.J3	FJB	564004	male
A31.J1	Dash	562780	male	AE42.J1	FJB	563679	male
A31.J2	Dash	562842	male	AE42.J2	FJB	564037	female
A31.J3	Dash	562464	male	AE42.J3	FJB	564004	male
A31.J4	Dash	562465	male	AE43.J1	FJB	563679	male
A31.J5	Dash	563071	male	AE43.J2	FJB	564037	male
A34.J	EngineCmpt.	568118	male	AE43.J3	FJB	565957	male
A34.K	EngineCmpt.	564270	male	AE44.J1	FJB	563679	male
A34.L	EngineCmpt.	564269	male	AE44.J2	FJB	564037	female
A36.JA	FJB	562767	male	AE44.J3	FJB	565957	male
A36.JB	FJB	562765	male	AE45.J1	FJB	563679	male
A36.JC	FJB	562957	male	AE45.J2	FJB	564037	female
A37	Dash	563884	male	AE45.J3	FJB	565957	male
A40.A	FJB	561668	male	AE46.J1	FJB	563679	male
A77	Parcelrack	564547	male	AE46.J2	FJB	564037	female
A78	Parcelrack	562583	female	AE46.J3	FJB	565957	male
A79	Parcelrack	562583	female	AE47.J1	RHConsole	563679	male
A80	Parcelrack	562479	female	AE47.J2	RHConsole	564037	female

CONNECTORS LIST

No	Location	Part #	Gender	No	Location	Part #	Gender
AE47.J3	RHConsole	565957	male	AltUR.C	EngineCmpt.	564469	female
AE48.J1	RHConsole	563679	male	B85	Engine_Cmpt	563815	male
AE48.J2	RHConsole	564037	female	B96	Engine_Cmpt	563821	male
AE48.J3	RHConsole	565957	male	B96B	Engine_Cmpt	563823	male
AE49.J1	RJB	563679	male	B97	Engine_Cmpt	563816	male
AE49.J2	RJB	564037	male	B98	Engine_Cmpt	563817	male
AE49.J3	RJB	565957	male	B99	Engine_Cmpt	563815	male
AE50.J1	RJB	563679	male	B115A	EngineCmpt.	564226	male
AE50.J2	RJB	564037	male	B142C	CondensorCmpt.	563515	male
AE50.J3	RJB	565957	male	B310	EngineCmpt.	565967	male
AE51.J1	RJB	563679	male	C1	FJB	563589	male
AE51.J2	RJB	564037	female	C1	FJB	563590	female
AE51.J3	RJB	565957	male	C1S	FJB	563589	male
AE52.J1	RJB	563679	male	C1S	FJB	563590	female
AE52.J2	RJB	564037	female	C2	Service_Cmpt	563580	male
AE52.J3	RJB	565957	male	C2	Service_Cmpt	563581	female
AE54.J1	EvaporatorCmpt.	563679	male	C2A	FJB	563580	male
AE54.J2	EvaporatorCmpt.	564037	female	C2A	FJB	563581	female
AE54.J3	EvaporatorCmpt.	565957	male	C2B	FJB	564034	male
AE55.J1	Dash	563679	male	C2B	FJB	564035	female
AE55.J2	Dash	564037	female	C3_plug	RJB	563589	male
AE55.J3	Dash	564004	male	C3_socket	RJB	563590	female
AE56.J1	Dash	563679	male	C3S	RJB	563593	male
AE56.J2	Dash	564037	male	C3S	RJB	563590	female
AE56.J3	Dash	564004	male	C4	FJB	563580	male
AE57.J1	3rd_RH_Lugg_Cmpt	563679	male	C4	FJB	563581	female
AE57.J2	3rd_RH_Lugg_Cmpt	564037	male	C5	FJB	563589	male
AE57.J3	3rd_RH_Lugg_Cmpt	564004	male	C5	FJB	563590	female
AE58.J1	SlideoutPanel	563679	male	C5S	FJB	563589	male
AE58.J2	SlideoutPanel	564037	male	C5S	FJB	563590	female
AE58.J3	SlideoutPanel	565957	male	C6	FJB	563582	male
AE59.J1	SlideoutPanel	563679	male	C6	FJB	563583	female
AE59.J2	SlideoutPanel	564037	male	C7	Service_Cmpt	562566	male
AE59.J3	SlideoutPanel	565957	male	C7	Service_Cmpt	562565	female
AltLL.A	EngineCmpt.	563746	female	C8	FJB	563227	male
AltLL.B	EngineCmpt.	560815	female	C8	FJB	563614	female
AltLL.C	EngineCmpt.	564469	female	C9	RJB	561986	male
AltUL.A	EngineCmpt.	563746	female	C9	RJB	561987	female
AltUL.B	EngineCmpt.	560815	female	C10	Engine_Cmpt	562477	male
AltUL.C	EngineCmpt.	564469	female	C10	Engine_Cmpt	562479	female
AltUR.A	EngineCmpt.	563746	female	C11	Service_Cmpt	563580	male
AltUR.B	EngineCmpt.	560815	female	C11	Service_Cmpt	563581	female

CONNECTORS LIST

No	Location	Part #	Gender	No	Location	Part #	Gender
C12	Engine_Cmpt	562581	male	C45	FJB	561642	female
C12	Engine_Cmpt	562583	female	C46	WCL_System	562549	male
C13_plug	RH_Console	563589	male	C46	WCL_System	562550	female
C13_socket	RH_Console	563590	female	C49	FJB	562005	male
C13S	RH_Console	563589	male	C49	FJB	561714	female
C13S	RH_Console	563590	female	C50	RJB	563931	male
C14	FrontVehicle	562581	male	C50	RJB	563930	female
C14	FrontVehicle	562583	female	C52	EvaporatorCmpt.	563618	male
C15A	Evap_Cmpt	568110	male	C52	EvaporatorCmpt.	563616	female
C15A	Evap_Cmpt	568109	female	C54	EngineCmpt.	563226	male
C17	RJB	560195	male	C54	EngineCmpt.	563613	female
C17	RJB	560169	female	C54A	EngineCmpt.	568110	male
C18	FJB	561986	male	C54A	EngineCmpt.	568109	female
C18	FJB	561987	female	C54B	EngineCmpt.	563589	male
C19	RJB	561986	male	C54B	EngineCmpt.	563590	female
C19	RJB	561987	female	C58	CondensorCmpt.	564567	male
C23	Evap_Cmpt	564034	male	C58	CondensorCmpt.	564568	female
C23	Evap_Cmpt	564035	female	C58A	CondensorCmpt.	564258	male
C24_plug	Evap_Cmpt	561690	male	C58A	CondensorCmpt.	566037	female
C24_socket	Evap_Cmpt	561566	female	C59	3rdLuggCmpt.	561643	male
C26	UreaCmpt.	563226	male	C59	3rdLuggCmpt.	561642	female
C26	UreaCmpt.	563613	female	C61	Fr_Service_Door	561669	male
C26A	UreaCmpt.	568110	male	C61	Fr_Service_Door	561670	female
C26A	UreaCmpt.	568109	female	C62	Fr_Service_Door	562566	male
C26B	UreaCmpt.	563227	male	C62	Fr_Service_Door	562565	female
C26B	UreaCmpt.	563614	female	C64	EngineCmpt.	568110	male
C29	WCL_System	563651	male	C64	EngineCmpt.	568109	female
C29	WCL_System	563652	female	C71	FJB	561646	male
C30	WCL_System	561710	male	C71	FJB	561645	female
C30	WCL_System	561709	female	C72	FJB	561646	male
C32W	3rd_RH_Lugg_Cmpt	561640	male	C72	FJB	561645	female
C32W	3rd_RH_Lugg_Cmpt	561639	female	C74	FJB	561645	female
C33	3rd_RH_Lugg_Cmpt	564034	male	C74	FJB	561646	male
C33	3rd_RH_Lugg_Cmpt	564035	female	C80	EvaporatorCmpt.	562477	male
C34	RH_Console	561986	male	C80	EvaporatorCmpt.	562479	female
C34	RH_Console	561987	female	C81	1st_Lugg_Cmpt	562477	male
C39A	EngineCmpt.	561782	male	C81	1st_Lugg_Cmpt	562479	female
C39A	EngineCmpt.	561781	female	C82	1st_Lugg_Cmpt	562477	male
C40	Dash	562485	male	C82	1st_Lugg_Cmpt	562479	female
C40	Dash	562486	female	C83	2nd_Lugg_Cmpt	562477	male
C44_plug	FJB	561577	male	C83	2nd_Lugg_Cmpt	562479	female
C44_socket	FJB	561605	female	C84	2nd_Lugg_Cmpt	562477	male
C45	FJB	561643	male	C84	2nd_Lugg_Cmpt	562479	female

CONNECTORS LIST

No	Location	Part #	Gender	No	Location	Part #	Gender
C85	4rd_Lugg_Cmpt	562477	male	C121	EngineDoor	562565	female
C85	4rd_Lugg_Cmpt	562479	female	C122	EngineDoor	562566	male
C86	4rd_Lugg_Cmpt	563618	male	C122	EngineDoor	562565	female
C86	4rd_Lugg_Cmpt	563616	female	C130	Dash	562583	female
C87	EngineCmpt.	562485	male	C131A	EngineCmpt.	561782	male
C87	EngineCmpt.	562486	female	C131A	EngineCmpt.	561781	female
C88	3rd_RH_Lugg_Cmpt	563618	male	C131B	EngineCmpt.	561782	male
C88	3rd_RH_Lugg_Cmpt	563616	female	C131B	EngineCmpt.	561781	female
C89	CondensorCmpt.	562477	male	C132	RHConsol	561515	male
C89	CondensorCmpt.	562479	female	C132	RHConsol	561552	female
C91	RJB	562285	male	C133	Dash	561986	male
C91	RJB	562282	female	C133	Dash	561987	female
C92A	EngineCmpt.	563226	male	C133A	RH Console	561986	male
C92A	EngineCmpt.	563613	female	C133A	RH Console	561987	female
C92C	EngineCmpt.	562581	male	C134_plug	Dash	561577	male
C92C	EngineCmpt.	562583	female	C134_socket	Dash	561605	female
C94_plug	FJB	563589	male	C152	Cond_Cmpt	561611	male
C94_socket	FJB	563590	female	C152	Cond_Cmpt	561610	female
C96	FJB	561643	male	C158	CondensorCmpt.	562477	male
C96	FJB	561642	female	C158	CondensorCmpt.	562479	female
C97	FJB	561643	male	C159	CondensorCmpt.	566033	male
C97	FJB	561642	female	C159	CondensorCmpt.	566034	female
C100	EvaporatorCmpt.	562477	male	C170	LH_Console	561637	male
C100	EvaporatorCmpt.	562479	female	C170	LH_Console	561636	female
C100S	EvaporatorCmpt.	562477	male	C171	LH_Console	561646	male
C100S	EvaporatorCmpt.	562479	female	C171	LH_Console	561645	female
C101	Service_Cmpt	561690	male	C172	LHConsole	561637	male
C101	Service_Cmpt	561566	female	C172	LHConsole	561635	female
C102A	CondensorCmpt.	563226	male	C193_plug	RJB	563589	male
C102A	CondensorCmpt.	563613	female	C193_socket	RJB	563590	female
C104S_plug	3rdLuggCmpt.	563589	male	C194	FJB	563589	male
C104S_socket	3rdLuggCmpt.	563590	female	C194	FJB	563590	female
C105_plug	FJB	562581	male	C195	Dash	563347	male
C105_socket	FJB	562583	female	C195	Dash	560489	female
C106_plug	FJB	562581	male	C222	FJB	562477	male
C106_socket	FJB	562583	female	C222	FJB	562479	female
C110	PneumPanel	568110	male	C223	FJB	563227	male
C110	PneumPanel	568109	female	C223	FJB	563614	female
C114	3rd_RH_Lugg_Cmpt	561550	male	C224	FJB	561637	male
C114	3rd_RH_Lugg_Cmpt	561667	female	C224	FJB	561636	female
C119A	EngineDoor	568110	male	C225	FJB	562650	male
C119A	EngineDoor	568109	female	C225	FJB	562649	female
C121	EngineDoor	562566	male	C226	FJB	562650	male
				C226	FJB	562649	female

CONNECTORS LIST

No	Location	Part #	Gender	No	Location	Part #	Gender
C228	EngineCmpt.	562477	male	C562	3rdLuggCmpt.	561477	female
C228	EngineCmpt.	562479	female	C606_plug	FJB	561690	male
C242	ServiceCmpt.	562789	male	C606_socket	FJB	561566	female
C242	ServiceCmpt.	565131	female	C606A	FJB	561690	male
C243.	ServiceCmpt.	562789	male	C606A	FJB	561566	female
C243.	ServiceCmpt.	565131	female	C606B	FJB	561690	male
C266	EntraceDoor	561640	male	C606B	FJB	561566	female
C266	EntraceDoor	561639	female	C607_plug	FJB	561577	male
C279	Service_Cmpt	562477	male	C607_socket	FJB	561605	female
C279	Service_Cmpt	562479	female	C607A	FJB	561577	male
C290	Rear_Vehicle	562477	male	C607A	FJB	561605	female
C290	Rear_Vehicle	562479	female	C607B	FJB	561577	male
C304	2ndLuggCmpt.	560852	male	C607B	FJB	561605	female
C304	2ndLuggCmpt.	560851	female	C617	Mirror_LH	563801	male
C305	2ndLuggCmpt.	560852	male	C617	Mirror_LH	563800	female
C305	2ndLuggCmpt.	560851	female	C618	Mirror_RH	563801	male
C380A	Dash	564222	male	C618	Mirror_RH	563800	female
C380A	Dash	564224	female	C_ALT	EngineCmpt.	562581	male
C397	RJB	562285	male	C_ALT	EngineCmpt.	562583	female
C397	RJB	562282	female	C_ALT3	EngineCmpt.	562477	male
C463	EngineCmpt.	568112	male	C_ALT3	EngineCmpt.	562479	female
C463	EngineCmpt.	568111	female	C_Mo9	Evap_Cmpt	561577	male
C464A	RJB	564222	male	C_Mo9	Evap_Cmpt	561605	female
C464A	RJB	564224	female	C_Se51	FJB	563589	male
C551	3rdLuggCmpt.	561476	male	C_Se51	FJB	563590	female
C551	3rdLuggCmpt.	561477	female	CCust	RJB	562477	male
C553	2ndLuggCmpt.	561476	male	CCust	RJB	562479	female
C553	2ndLuggCmpt.	561477	female	CF167	RH_Console	562350	male
C554	1stLuggCmpt.	561476	male	CF167	RH_Console	563764	female
C554	1stLuggCmpt.	561477	female	CInt1	FJB	563227	male
C555	1stLuggCmpt.	561476	male	CInt1	FJB	563614	female
C555	1stLuggCmpt.	561477	female	CInt2	FJB	563226	male
C556	3rdLuggCmpt.	561476	male	CInt2	FJB	563613	female
C556	3rdLuggCmpt.	561477	female	CSo1	SlideOutPanel	562581	male
C557	2ndLugg.Cmpt.	561476	male	CSo1	SlideOutPanel	562583	female
C557	2ndLuggCmpt.	561477	female	CSo2	SlideOutPanel	561643	male
C559	3rdLuggCmpt.	561476	male	CSo2	SlideOutPanel	561641	female
C559	3rdLuggCmpt.	561477	female	CSo5	SlideOutPanel	561847	male
C560	3rdLuggCmpt.	561476	male	CSo5	SlideOutPanel	561862	female
C560	3rdLuggCmpt.	561477	female	CSo7	SlideOutPanel	562581	male
C561	3rdLuggCmpt.	561476	male	CSo7	SlideOutPanel	562583	female
C561	3rdLuggCmpt.	561477	female	CT_In	Rear_Vehicle	563582	male
C562	3rdLuggCmpt.	561476	male	CT_In	Rear_Vehicle	563583	female

CONNECTORS LIST

No	Location	Part #	Gender	No	Location	Part #	Gender
CT_Out	Rear_Vehicle	560478	female	L81.A	DPFDoor	562835	female
EI	EngineCmpt.	563739	male	L81.B	DFPDoor	562834	male
L1A	EngineCmpt.	562848	male	L82A	EngineDoor	562348	female
L10	Dash	561247	male	L83A	EngineDoor	562348	female
L16.A	FrontRoof	562615	female	L84.	RrRoof	562486	female
L16.B	FrontRoof	562615	female	L85.	RrRoof	562486	female
L17.A	FrontRoof	562615	female	L86.	RrRoof	562486	female
L17.B	FrontRoof	562615	female	L87.	RrRoof	562486	female
L18.A	EntraceDoor	561626	female	L88.	RrRoof	562486	female
L18.B	EntraceDoor	561626	female	L89.	RrRoof	562486	female
L21.	OutsideFront	560605	female	L90.	RrRoof	562486	female
L22.	OutsideFront	560605	female	L91A	RearVehiculeLH	562601	male
L23.	OutsideFront	560605	female	L92A	RearVehicleRH	562601	male
L24.	OutsideFront	560605	female	L93.A	RearOutsideLH	563069	female
L25.	OutsideFront	560605	female	L93.B	RearOutsideLH	563069	female
L26.	OutsideFront	560605	female	L94.A	RearOutsideRH	563069	female
L27.	OutsideFront	560605	female	L94.B	RearOutsideRH	563069	female
L59	OutsidefrontRH	562623	male	L95	Outside_Front_LH	562902	female
L59A	OutsideFrontRH	563366	male	L96	Outside_Front_RH	562902	female
L59B	OutsideFrontRH	562623	male	L97.A	Outside_Front_LH	563069	female
L60	OutsideFrontLH	562623	male	L97.B	Outside_Front_LH	563069	female
L60A	OutsideFrontLH	563366	male	L98.A	EntraceDoor	563069	female
L60B	OutsideFrontLH	562623	male	L98.B	EntraceDoor	563069	female
L61	OutsideFrontRH	562601	male	L120	DriverSeat	562237	female
L62	OutsideFrontLH	562601	male	L173	EngineCmpt.	563590	female
L63	FrontSideRH	562155	male	L174A	EngineCmpt.	563590	female
L64	OutsideFrontRH	562155	male	L176	3rd_Lugg_Cmpt	561247	male
L65	FrontSideLH	562155	male	L177	3rd_Lugg_Cmpt	561247	male
L66	OutsideFrontLH	562155	male	L178	4thLuggCmpt.	561247	male
L67	3rdLuggCmpt.	562155	male	L179	4thLuggCmpt.	561247	male
L68	3rdLuggCmpt.	562155	male	L180	2nd_Lugg_Cmpt	561247	male
L69	EvapCmpt.	562155	male	L181	2nd_Lugg_Cmpt	561247	male
L70	EvapCmpt.	562155	male	L182	1st_Lugg_Cmpt	561247	male
L71A	RearVehicleLH	562601	male	L183	1st_Lugg_Cmpt	561247	male
L72	Rear_VehicleLH	562155	male	L184	ServiceCmpt.	561247	male
L73A	RearVehicleRH	562601	male	L185.A	Dash	561539	male
L74	RearVehicleRH	562155	male	L185.B	Dash	561539	male
L75	RearVehicleLH	562155	male	L186.A	Dash	561539	male
L76	RearVehicleRH	562155	male	L186.B	Dash	561539	male
L77A	RearVehicleRH	562601	male	L187	Engine_Cmpt	561690	male
L78A	RearVehicleRH	562601	male	L193.A	Dash	560488	female
L79A	RearVehicleLH	562601	male	L193.B	Dash	560488	female
L80A	RearVehicleLH	562601	male	L194.A	Dash	562019	female

CONNECTORS LIST

No	Location	Part #	Gender	No	Location	Part #	Gender
L194.B	Dash	560488	female	Mo24	RH_Console	562348	female
L195.A	Dash	560488	female	Mo25	RH_Console	562348	female
L195.B	Dash	560488	female	Mo26	EntraceDoor	564161	male
L199	EngineCmpt.	562848	male	Mo27	Cond_Cmpt	563691	male
L203	RH_Console	561690	male	Mo28	Cond_Cmpt	563691	male
L204	WCL_Upper_Door	562803	male	Mo29	RJB	563590	female
L205	EvapCmpt.	562485	male	Mo30	1stLuggCmpt.LH	564161	male
L206	WCL_Upper_Door	562803	male	Mo31	1stLuggCmpt.RH	564161	male
L207.A	WCL_System	561699	female	Mo32	2ndLuggCmpt.LH	564161	male
L207.B	WCL_System	561701	female	Mo33	2ndLuggCmpt.RH	564161	male
L207.C	WCL_System	561701	female	Mo34	3rdLuggCmpt.LH	564161	male
L207.D	WCL_System	561699	female	Mo35	3rdLuggCmpt.RH	564161	male
L207.E	WCL_System	561701	female	Mo36	CompressorDoor	564161	male
L207.F	WCL_System	561699	female	Mo37	4thLuggCmpt.RH	564161	male
L207.G	WCL_System	561699	female	Mo38	4thLuggCmpt.LH	564161	male
L207.H	WCL_System	560926	female	Mo40	1stLuggCmpt.LH	561477	female
L207.I	WCL_System	560926	female	Mo41	2ndLuggCmpt.LH	561477	female
L282	Preheater_Cmpt	561690	male	Mo42	3rdLuggCmpt.LH	561477	female
L285.A	Rear_Vehicle	562835	female	Mo43	3rdLuggCmpt.LH	561477	female
L285.B	Rear_Vehicle	562834	male	Mo50	FrontAxleCmpt.	561690	male
L286.A	Rear_Vehicle	562835	female	Mo54	Service_Cmpt	562474	male
L286.B	Rear_Vehicle	562834	male	Mo55	EntraceDoor	563626	male
L298A	EngineCmpt.	563590	female	Mo65	EngineCmpt.	568089	male
L304	OutsideLuggDoorLH	562155	male	Mo67	EngineCmpt.	568089	male
L305	OutsideLuggDoorRH	562155	male	Mo68	EngineCmpt.	568089	male
L306	Radiator_Door	562155	male	Mo69	EngineCmpt.	568089	male
L307	Radiator_Door	562155	male	Mo70	EngineCmpt.	568089	male
L309	RJB	561247	male	Mo71	EngineCmpt.	568089	male
L350A.A	RearAxleCmpt.	564552	male	Mo72	EngineCmpt.	568089	male
L350A.B	RearAxleCmpt.	563340	male	Mo73	EngineCmpt.	568089	male
L350A.C	RearAxleCmpt.	562251	male	MoSO1	FrontSlideOut	562350	male
Mo3	Dash	561667	female	MoSO2	RearSlideOut	562350	male
Mo4	Dash	564161	male	PC1	CantrackCable	562650	male
Mo7	Cond_Cmpt	563691	male	PC1	CantrackCable	562649	female
Mo8	Cond_Cmpt	563691	male	R1.A	RJB	562486	female
Mo11	CondensorCmpt.	568089	male	R3	RJB	563409	male
Mo12	Engine_Cmpt	561690	male	R6	Dash	564496	male
Mo15.	FrCeling	563517	female	R7	Dash	564496	male
Mo16.	FrCeling	563517	female	R12	Evap_Cmpt	563409	male
Mo17	RH_Console	563626	male	R21	FJB	560525	male
Mo19	Fr_Service_Door	562474	male	R27	Dash	564496	male
Mo20	Fr_Service_Door	562474	male	R29	RJB	563409	male
Mo22	RH_Console	561186	male	R30	FJB	564496	male

CONNECTORS LIST

No	Location	Part #	Gender	No	Location	Part #	Gender
R31	FJB	564496	male	Se23	EngineCmpt.	563159	female
R34	RJB	564210	male	Se23A	EngineCmpt.	563159	female
R35	RJB	564210	male	Se24	EngineCmpt.	563758	female
R36	Dash	564496	male	Se24A	EngineCmpt.	563758	female
R37	Dash	564496	male	Se25	EvapCmpt.	561248	female
R38	FJB	564496	male	Se29	Engine_Cmpt	561566	female
R47	WCL_System	564496	male	Se30	EngineCmpt.	562877	female
R167	RH_Console	564496	male	Se31	EngineCmpt.	562877	female
Res3	ParcelRack	563590	female	Se32	Rear_Axle_Cmpt	562426	male
Res4	RH_Console	563590	female	Se33	Rear_Axle_Cmpt	562856	male
Res6	FJB	563590	female	Se34	Rear_Axle_Cmpt	562427	male
Res7	Dashboard	563590	female	Se35	Rear_Axle_Cmpt	562426	male
Res15	Engine_Cmpt	561782	male	Se36	Rear_Axle_Cmpt	562427	male
Res19	FJB	563590	female	Se37	Front_Axle_LH	641132	female
Res20	FJB	563590	female	Se38	Front_Axle_RH	641132	female
Res31	UreaCmpt.	562350	male	Se39	Rear_Axle_LH	641132	female
Res32	UreaCmpt.	563764	female	Se40	Rear_Axle_LH	641132	female
Res46	Rear_Axle	563590	female	Se45	ServiceCmpt.	563409	male
Res53.A	CondensorCmpt.	563590	female	Se46	RearAxleCmpt.	562348	female
Res99	Dash	563590	female	Se49	EngineCmpt.	561690	male
RSO1_1	SlideOutPanel	564496	male	Se51	DriverSeat	563589	male
RSO1_2	SlideOutPanel	564496	male	Se53	Service_Cmpt	563159	female
RSO2_1	SlideOutPanel	564496	male	Se54	Service_Cmpt	563159	female
RSO2_2	SlideOutPanel	564496	male	Se55	Service_Cmpt	563159	female
Se2	FJB	561566	female	Se56	WCLcompt.	562884	female
Se11.A	Cond_Cmpt	560082	female	Se57	Pneumatic Panel	563159	female
Se11.B	Cond_Cmpt	560082	female	Se60	Service_Cmpt	563409	male
Se11.C	Cond_Cmpt	560082	female	Se62	WCL_system	561690	male
Se13	Engine_Cmpt	562350	male	Se63	RearAxleCmpt.	641132	female
Se14.A	Driver_Area	561782	male	Se64	RearAxleCmpt.	641132	female
Se14.B	Driver_Area	561781	female	Se65	Dash	564042	female
Se15.A	EntraceDoor	560488	female	Se66	FrontAxleCmpt.	564039	female
Se15.B	EntraceDoor	560488	female	Se67	ServiceCmpt.	563159	female
Se15.C	EntraceDoor	560488	female	Se69	ServiceCmpt.	563159	female
Se16.A	EntraceDoor	562651	female	Se89	EngineCmpt	562350	male
Se16.B	EntraceDoor	562651	female	Se94	WCL_system	562877	female
Se17.A	EntraceDoor	562291	female	Se100	WCL_Upper_Door	562479	female
Se17.B	EntraceDoor	562291	female	SESO1	SlideOutPanel	563159	female
Se17.C	EntraceDoor	562291	female	SESO2_SESO3	Frontslideout	562479	female
Se18	ServiceCmpt.	561566	female	SESO5_SESO6	Rearslideout	562479	female
Se19_P	Service_Cmpt	563677	male	So3	RHConsole	641385	male
Se19_S	Service_Cmpt	563677	male	So7	Service_Cmpt	561566	female
Se20.	Front_Axle_Cmpt	562426	male	So8	ServiceCmpt.	641385	male
Se21	Dash	561248	female	So9	EngineCmpt.	560016	female

CONNECTORS LIST

No	Location	Part #	Gender	No	Location	Part #	Gender
So11	Cond_Cmpt	561566	female	Sw18A	LH_Console	562763	male
So13	Evap_Cmpt	563204	female	Sw20	Dashboard	562763	male
So17	Service_Cmpt	562848	male	Sw24	Dash	562763	male
So21	Front_Axle_Cmpt	564046	female	Sw24A	Dash	562763	male
So22	Front_Axle_Cmpt	564046	female	Sw34	Dash	562763	male
So23	Rear_Axle_Cmpt	564046	female	Sw35	LHConsole	562763	male
So24	Rear_Axle_Cmpt	564046	female	Sw38	LH_Console	562763	male
So27	RearAxleCmpt.	564045	female	Sw40	LH_Console	561690	male
So28	ServiceCmpt.	641385	male	Sw41	LH_Console	562749	male
So29	ServiceCmpt.	641385	male	Sw42	WCL_System	561636	female
So30	ServiceCmpt.	641385	male	Sw44.A	ServiceCmpt.	562403	female
So31	ServiceCmpt.	641385	male	Sw45.A	3rd_Lugg_Cmpt	562403	female
So32	ServiceCmpt.	641385	male	Sw45.B	3rdLuggCmpt.	562403	female
So36	EngineCmpt.	561690	male	Sw46.A	3rd_Lugg_Cmpt	562403	female
So50	RearAxleCmpt.	564046	female	Sw46.B	3rdLuggCmpt.	562403	female
So52	FrontAxleCmpt.	564045	female	Sw46A.A	3rd_RH_Lugg_Cmpt	562403	female
spBar4	EngineCmpt.	564135	male	Sw46A.B	3rd_RH_Lugg_Cmpt	562403	female
spBar5	EngineCmpt.	564135	male	Sw47.A	4thLuggCmpt.	562403	female
spBar6	EngineCmpt.	564135	male	Sw47.B	4thLuggCmpt.	562403	female
spBar7	CondCmpt.	564135	male	Sw48.A	4thLuggCmpt.	562403	female
spBar11	EngineCmpt.	564135	male	Sw48.B	4thLuggCmpt.	562403	female
spBar12	EngineCmpt.	564135	male	Sw49.A	2nd_Lugg_Cmpt	562403	female
spBar13	EngineCmpt.	564135	male	Sw49.B	2ndLuggCmpt.	562403	female
spBar14	EngineCmpt.	564135	male	Sw50.A	2nd_Lugg_Cmpt	562403	female
spBar15	EngineCmpt.	564135	male	Sw51.A	1st_Lugg_Cmpt	562403	female
spBar16	EngineCmpt.	564135	male	Sw52.A	1st_Lugg_Cmpt	562403	female
spBar19	CondCmpt.	564135	male	Sw58.A	EngineCmpt.	563135	male
spBar20	CondCmpt.	564135	male	Sw59	EngineCmpt.	563135	male
spBar21	CondCmpt.	564135	male	Sw63A	LHConsole	562763	male
spBar22	EngineCmpt.	564135	male	Sw64.A	ServiceCmpt.	560815	female
spBar23	EngineCmpt.	564135	male	Sw64.B	Ssp	560815	female
spBar24	EngineCmpt.	564135	male	Sw82	RJB	563135	male
spBar26	Rr_Axle_Cmpt	564135	male	Sw83.A	Dash	560082	female
spBar27	Rr_Axle_Cmpt	564135	male	Sw83.B	Dash	560815	female
Sw1.C258	Driver_Area	561188	female	Sw83.C	Dash	560082	female
Sw1.C259	Driver_Area	561186	male	Sw83.D	Dash	560815	female
Sw2	Dash	562763	male	Sw85	LH_Console	562749	male
Sw3	Dash	562763	male	Sw99	Dash	562763	male
Sw4	Dash	562763	male	Sw102	Dash	562763	male
Sw6	Dash	562763	male	Sw103A	LHConsole	562763	male
Sw14	Dash	562763	male	Sw104	Dash	562763	male
Sw16	Dash	562763	male	Sw107.A	LHConsole	561457	female
Sw17	Dash	562763	male	Sw107.B	LHConsole	561457	female

CONNECTORS LIST

No	Location	Part #	Gender	No	Location	Part #	Gender
Sw107.C	LHConsole	561457	female	VECR4	RJB	563182	male
Sw107.D	LHConsole	561457	female	VECR9	RJB	563448	male
Sw107.E	LHConsole	561457	female	VECR10	RJB	563181	male
Sw107.F	LHConsole	561457	female	VECR11	RJB	563184	male
Sw107.G	LHConsole	561457	female	VECR12	RJB	563187	male
Sw107.H	LHConsole	561457	female	VECT2	Rear_Vehicle	563716	male
Sw107.J	LHConsole	561457	female	VECT3	RearVehicle	563718	male
Sw107.K	LHConsole	561457	female	VECT4	RearVehicle	563714	male
Sw108	LHConsole	562763	male	Y80	Engine_Cmpt	563789	male
Sw109.A	1st_Lugg_LH	560079	female	Y81	Cond_Cmpt	563793	male
Sw109.B	1st_Lugg_LH	560079	female				
Sw110.A	1st_Lugg_RH	560079	female				
Sw110.B	1st_Lugg_RH	560079	female				
Sw111.A	2ndLuggCmpt.	560079	female				
Sw111.B	2ndLuggCmpt.	560079	female				
Sw112.A	2ndLuggCmpt.	560079	female				
Sw112.B	2ndLuggCmpt.	560079	female				
Sw113.A	2ndLuggCmpt.	560079	female				
Sw113.B	2ndLuggCmpt.	560079	female				
Sw114.A	3rd_Lugg_RH	560079	female				
Sw114.B	3rd_Lugg_RH	560079	female				
Sw115.A	Compr_Door	560079	female				
Sw115.B	Compr_Door	560079	female				
Sw122	ServiceCmpt.	562763	male				
Sw137	Dash	562763	male				
Sw156	LH_Console	562763	male				
Sw157	Dash	562763	male				
Sw158	Dash	562763	male				
SwSo1	FrontSlideOut	561552	female				
SwSo2	RearSlideOut	561552	female				
Term106	RJB	{part_no564189}	N/A				
Term107	RJB	{part_no564189}	N/A				
VECF1	FJB	563186	male				
VECF2	FJB	563183	male				
VECF3	FJB	563185	male				
VECF4	FJB	563182	male				
VECF9	FJB	563448	male				
VECF10	FJB	563181	male				
VECF11	FJB	563184	male				
VECF12	FJB	563187	male				
VECR1	RJB	563186	male				
VECR2	RJB	563183	male				
VECR3	RJB	563185	male				

CONNECTORS LIST

No	Location	Part #	Gender	No	Location	Part #	Gender
Sw165	RHConsole	562763	male				
Sw166	RHConsole	562763	male				
Sw167	RHConsole	562763	male				

CONNECTORS LIST

No	Location	Part #	Gender	No	Location	Part #	Gender
A1	RJB	563975	male	A81CN1	FJB	562767	male
A2	FJB	563984	male	A81CN3A	FJB	564741	male
A3	Dash	562363	male	A81CN3B	FJB	564742	male
A4.A	Service_Cmpt	562428	female	A83	Parcelrack	565970	female
A4.B	Service_Cmpt	561188	female	A96	FJB	563678	male
A5	Service_Cmpt	562428	female	A97	Dash	563226	male
A6	Engine_Cmpt	562427	male	A97A	Dash	563226	male
A7	Rear_Axle_Cmpt	563979	male	A97A	Dash	563613	female
A9.Cx1	FJB	564041	female	A97B	Dash	563226	male
A9.Cx2	FJB	563678	male	A97B	Dash	563613	female
A9.Cx3	FJB	564037	female	A99	FJB	564205	male
A9.Cx4	FJB	564038	female	A100.1	Front_Axle_Cmpt	563515	male
A14.A	Dash	562766	male	A100.2	Dash	563515	male
A14.B	Dash	562767	male	A100.3	Rr_Axle_Cmpt	563515	male
A14.C	Dash	562765	male	A106	FrontVehicle	565974	male
A15	Dash	562464	male	A114A	Dash	564252	male
A18.J1	FJB	562794	male	A130	Driver_Area	563226	male
A18.J2	FJB	562650	male	A131.A	Engine_Cmpt	561782	male
A24.A	RH_Console	561890	male	A131.B	Engine_Cmpt	561781	female
A24.B	RH_Console	561566	female	A137A	CondensorCmpt.	2E+07	male
A24.C	RH_Console	561889	female	A138	Cond_Cmpt	563787	male
A27	Service_Cmpt	562929	male	A139	Dash	564501	male
A28	Service_Cmpt	562928	male	AE41.J1	FJB	563679	male
A30.A	Dash	561611	male	AE41.J2	FJB	564037	female
A30.C	Dash	561889	female	AE41.J3	FJB	564004	male
A31.J1	Dash	562780	male	AE42.J1	FJB	563679	male
A31.J2	Dash	562842	male	AE42.J2	FJB	564037	female
A31.J3	Dash	562464	male	AE42.J3	FJB	564004	male
A31.J4	Dash	562465	male	AE43.J1	FJB	563679	male
A31.J5	Dash	563071	male	AE43.J2	FJB	564037	male
A34.J	EngineCmpt.	568118	male	AE43.J3	FJB	565957	male
A34.K	EngineCmpt.	564270	male	AE44.J1	FJB	563679	male
A34.L	EngineCmpt.	564269	male	AE44.J2	FJB	564037	female
A36.JA	FJB	562767	male	AE44.J3	FJB	565957	male
A36.JB	FJB	562765	male	AE45.J1	FJB	563679	male
A36.JC	FJB	562957	male	AE45.J2	FJB	564037	female
A37	Dash	563884	male	AE45.J3	FJB	565957	male
A40.A	FJB	561668	male	AE46.J1	FJB	563679	male
A77	Parcelrack	564547	male	AE46.J2	FJB	564037	female
A78	Parcelrack	562583	female	AE46.J3	FJB	565957	male
A79	Parcelrack	562583	female	AE47.J1	RHConsole	563679	male
A80	Parcelrack	562479	female	AE47.J2	RHConsole	564037	female

CONNECTORS LIST

No	Location	Part #	Gender	No	Location	Part #	Gender
AE47.J3	RHConsole	565957	male	AltUR.C	EngineCmpt.	564469	female
AE48.J1	RHConsole	563679	male	B85	Engine_Cmpt	563815	male
AE48.J2	RHConsole	564037	female	B96	Engine_Cmpt	563821	male
AE48.J3	RHConsole	565957	male	B96B	Engine_Cmpt	563823	male
AE49.J1	RJB	563679	male	B97	Engine_Cmpt	563816	male
AE49.J2	RJB	564037	male	B98	Engine_Cmpt	563817	male
AE49.J3	RJB	565957	male	B99	Engine_Cmpt	563815	male
AE50.J1	RJB	563679	male	B115A	EngineCmpt.	564226	male
AE50.J2	RJB	564037	male	B142C	CondensorCmpt.	563515	male
AE50.J3	RJB	565957	male	B310	EngineCmpt.	565967	male
AE51.J1	RJB	563679	male	C1	FJB	563589	male
AE51.J2	RJB	564037	female	C1	FJB	563590	female
AE51.J3	RJB	565957	male	C1S	FJB	563589	male
AE52.J1	RJB	563679	male	C1S	FJB	563590	female
AE52.J2	RJB	564037	female	C2	Service_Cmpt	563580	male
AE52.J3	RJB	565957	male	C2	Service_Cmpt	563581	female
AE54.J1	EvaporatorCmpt.	563679	male	C2A	FJB	563580	male
AE54.J2	EvaporatorCmpt.	564037	female	C2A	FJB	563581	female
AE54.J3	EvaporatorCmpt.	565957	male	C2B	FJB	564034	male
AE55.J1	Dash	563679	male	C2B	FJB	564035	female
AE55.J2	Dash	564037	female	C3_plug	RJB	563589	male
AE55.J3	Dash	564004	male	C3_socket	RJB	563590	female
AE56.J1	Dash	563679	male	C3S	RJB	563593	male
AE56.J2	Dash	564037	male	C3S	RJB	563590	female
AE56.J3	Dash	564004	male	C4	FJB	563580	male
AE57.J1	3rd_RH_Lugg_Cmpt	563679	male	C4	FJB	563581	female
AE57.J2	3rd_RH_Lugg_Cmpt	564037	male	C5	FJB	563589	male
AE57.J3	3rd_RH_Lugg_Cmpt	564004	male	C5	FJB	563590	female
AE58.J1	SlideoutPanel	563679	male	C5S	FJB	563589	male
AE58.J2	SlideoutPanel	564037	male	C5S	FJB	563590	female
AE58.J3	SlideoutPanel	565957	male	C6	FJB	563582	male
AE59.J1	SlideoutPanel	563679	male	C6	FJB	563583	female
AE59.J2	SlideoutPanel	564037	male	C7A	Service_Cmpt	562789	male
AE59.J3	SlideoutPanel	565957	male	C7A	Service_Cmpt	565131	female
AltLL.A	EngineCmpt.	563746	female	C8	FJB	563227	male
AltLL.B	EngineCmpt.	560815	female	C8	FJB	563614	female
AltLL.C	EngineCmpt.	564469	female	C9	RJB	561986	male
AltUL.A	EngineCmpt.	563746	female	C9	RJB	561987	female
AltUL.B	EngineCmpt.	560815	female	C10	Engine_Cmpt	562477	male
AltUL.C	EngineCmpt.	564469	female	C10	Engine_Cmpt	562479	female
AltUR.A	EngineCmpt.	563746	female	C11	Service_Cmpt	563580	male
AltUR.B	EngineCmpt.	560815	female	C11	Service_Cmpt	563581	female

CONNECTORS LIST

No	Location	Part #	Gender	No	Location	Part #	Gender
C12	Engine_Cmpt	562581	male	C44_plug	FJB	561577	male
C12	Engine_Cmpt	562583	female	C44_socket	FJB	561605	female
C13_plug	RH_Console	563589	male	C45	FJB	561643	male
C13_socket	RH_Console	563590	female	C45	FJB	561642	female
C13S	RH_Console	563589	male	C46	WCL_System	562549	male
C13S	RH_Console	563590	female	C46	WCL_System	562550	female
C14	FrontVehicle	562581	male	C49	FJB	562005	male
C14	FrontVehicle	562583	female	C49	FJB	561714	female
C15A	Evap_Cmpt	568110	male	C50	RJB	563931	male
C15A	Evap_Cmpt	568109	female	C50	RJB	563930	female
C17	RJB	560169	male	C52	EvaporatorCmpt.	563618	male
C17	RJB	560195	female	C52	EvaporatorCmpt.	563616	female
C18	FJB	561986	male	C54	EngineCmpt.	563226	male
C18	FJB	561987	female	C54	EngineCmpt.	563613	female
C19	RJB	561986	male	C54A	EngineCmpt.	568110	male
C19	RJB	561987	female	C54A	EngineCmpt.	568109	female
C23	Evap_Cmpt	564034	male	C54B	EngineCmpt.	563589	male
C23	Evap_Cmpt	564035	female	C54B	EngineCmpt.	563590	female
C24_plug	Evap_Cmpt	561690	male	C58	CondensorCmpt.	564567	male
C24_socket	Evap_Cmpt	561566	female	C58	CondensorCmpt.	564568	female
C26	UreaCmpt.	563226	male	C58A	CondensorCmpt.	564258	male
C26	UreaCmpt.	563613	female	C58A	CondensorCmpt.	566037	female
C26A	UreaCmpt.	568110	male	C59	3rdLuggCmpt.	561643	male
C26A	UreaCmpt.	568109	female	C59	3rdLuggCmpt.	561642	female
C26B	UreaCmpt.	563227	male	C61	Fr_Service_Door	561669	male
C26B	UreaCmpt.	563614	female	C61	Fr_Service_Door	561670	female
C29	WCL_System	563651	male	C62	Fr_Service_Door	562566	male
C29	WCL_System	563652	female	C62	Fr_Service_Door	562565	female
C30	WCL_System	561710	male	C64	EngineCmpt.	568110	male
C30	WCL_System	561709	female	C64	EngineCmpt.	568109	female
C32W	3rd_RH_Lugg_Cmpt	561640	male	C71	FJB	561646	male
C32W	3rd_RH_Lugg_Cmpt	561639	female	C71	FJB	561645	female
C33	3rd_RH_Lugg_Cmpt	564034	male	C72	FJB	561646	male
C33	3rd_RH_Lugg_Cmpt	564035	female	C72	FJB	561645	female
C34	RH_Console	561986	male	C74	FJB	561645	female
C34	RH_Console	561987	female	C74	FJB	561646	male
C35	RH_Console	561987	female	C80	EvaporatorCmpt.	562477	male
C35	RH_Console	561986	male	C80	EvaporatorCmpt.	562479	female
C39A	EngineCmpt.	561782	male	C81	1st_Lugg_Cmpt	562477	male
C39A	EngineCmpt.	561781	female	C81	1st_Lugg_Cmpt	562479	female
C40	Dash	562485	male	C82	1st_Lugg_Cmpt	562477	male
C40	Dash	562486	female	C82	1st_Lugg_Cmpt	562479	female

CONNECTORS LIST

No	Location	Part #	Gender	No	Location	Part #	Gender
C83	2nd_Lugg_Cmpt	562477	male	C114	3rd_RH_Lugg_Cmpt	561550	male
C83	2nd_Lugg_Cmpt	562479	female	C114	3rd_RH_Lugg_Cmpt	561667	female
C84	2nd_Lugg_Cmpt	562477	male	C119A	EngineDoor	568110	male
C84	2nd_Lugg_Cmpt	562479	female	C119A	EngineDoor	568109	female
C85	4rd_Lugg_Cmpt	562477	male	C121	EngineDoor	562566	male
C85	4rd_Lugg_Cmpt	562479	female	C121	EngineDoor	562565	female
C86	4rd_Lugg_Cmpt	563618	male	C122	EngineDoor	562566	male
C86	4rd_Lugg_Cmpt	563616	female	C122	EngineDoor	562565	female
C87	EngineCmpt.	562485	male	C129	DASH	562464	male
C87	EngineCmpt.	562486	female	C129	DASH	565871	female
C88	3rd_RH_Lugg_Cmpt	563618	male	C129B	Driver_Area	562477	male
C88	3rd_RH_Lugg_Cmpt	563616	female	C129B	Driver_Area	562479	female
C89	CondensorCmpt.	562477	male	C130	dash	562581	male
C89	CondensorCmpt.	562479	female	C130	Dash	562583	female
C91	RJB	562285	male	C131A	EngineCmpt.	561782	male
C91	RJB	562282	female	C131A	EngineCmpt.	561781	female
C92A	EngineCmpt.	563226	male	C131B	EngineCmpt.	561782	male
C92A	EngineCmpt.	563613	female	C131B	EngineCmpt.	561781	female
C92C	EngineCmpt.	562581	male	C132	RHConsol	561515	male
C92C	EngineCmpt.	562583	female	C132	RHConsol	561552	female
C94_plug	FJB	563589	male	C133	Dash	561986	male
C94_socket	FJB	563590	female	C133	Dash	561987	female
C96	FJB	561643	male	C133A	RHConsole	561986	male
C96	FJB	561642	female	C133A	RHConsole	561987	female
C97	FJB	561643	male	C134_plug	Dash	561577	male
C97	FJB	561642	female	C134_socket	Dash	561605	female
C100	EvaporatorCmpt.	562477	male	C152	Cond_Cmpt	561611	male
C100	EvaporatorCmpt.	562479	female	C152	Cond_Cmpt	561610	female
C100S	EvaporatorCmpt.	562477	male	C158	CondensorCmpt.	562477	male
C100S	EvaporatorCmpt.	562479	female	C158	CondensorCmpt.	562479	female
C101	Service_Cmpt	561690	male	C159	CondensorCmpt.	566033	male
C101	Service_Cmpt	561566	female	C159	CondensorCmpt.	566034	female
C102A	CondCmpt.	563226	male	C160	FJB	562477	male
C102A	CondCmpt.	563613	female	C160	FJB	562479	female
C104S_plug	3rdLuggCmpt.	563589	male	C160_RH	Roof_Fr_RH	562485	male
C104S_socket	3rdLuggCmpt.	563590	female	C160_RH	Roof_Fr_RH	562486	female
C105_plug	FJB	562581	male	C161_LH	Roof_LH_Fr	562485	male
C105_socket	FJB	562583	female	C161_LH	Roof_LH_Fr	562486	female
C106_plug	FJB	562581	male	C170	LH_Console	561637	male
C106_socket	FJB	562583	female	C170	LH_Console	561636	female
C110	PneumPanel	568110	male	C171	LH_Console	561646	male
C110	PneumPanel	568109	female	C171	LH_Console	561645	female

CONNECTORS LIST

No	Location	Part #	Gender	No	Location	Part #	Gender
C172	LHConsole	561637	male	C540	Driver_Area	562479	female
C172	LHConsole	561635	female	C541	Driver_Area	563226	male
C193_plug	RJB	563589	male	C541	Driver_Area	563613	female
C193_socket	RJB	563590	female	C551	3rdLuggCmpt.	561476	male
C194	FJB	563589	male	C551	3rdLuggCmpt.	561477	female
C194	FJB	563590	female	C553	2ndLuggCmpt.	561476	male
C195	Dash	563347	male	C553	2ndLuggCmpt.	561477	female
C195	Dash	560489	female	C554	1stLuggCmpt.	561476	male
C222	FJB	562477	male	C554	1stLuggCmpt.	561477	female
C222	FJB	562479	female	C555	1stLuggCmpt.	561476	male
C223	FJB	563227	male	C555	1stLuggCmpt.	561477	female
C223	FJB	563614	female	C556	3rdLuggCmpt.	561476	male
C224	FJB	561637	male	C556	3rdLuggCmpt.	561477	female
C224	FJB	561636	female	C557	2ndLugg.Cmpt.	561476	male
C225	FJB	562650	male	C557	2ndLuggCmpt.	561477	female
C225	FJB	562649	female	C559	3rdLuggCmpt.	561476	male
C226	FJB	562650	male	C559	3rdLuggCmpt.	561477	female
C226	FJB	562649	female	C560	3rdLuggCmpt.	561476	male
C228	EngineCmpt.	562477	male	C560	3rdLuggCmpt.	561477	female
C228	EngineCmpt.	562479	female	C561	3rdLuggCmpt.	561476	male
C242	ServiceCmpt.	562789	male	C561	3rdLuggCmpt.	561477	female
C242	ServiceCmpt.	565131	female	C562	3rdLuggCmpt.	561476	male
C243.	ServiceCmpt.	562789	male	C562	3rdLuggCmpt.	561477	female
C243.	ServiceCmpt.	565131	female	C606_plug	FJB	561690	male
C266	EntraceDoor	561640	male	C606_socket	FJB	561566	female
C266	EntraceDoor	561639	female	C606A	FJB	561690	male
C279	Service_Cmpt	562477	male	C606A	FJB	561566	female
C279	Service_Cmpt	562479	female	C606B	FJB	561690	male
C290	Rear_Vehicle	562477	male	C606B	FJB	561566	female
C290	Rear_Vehicle	562479	female	C607_plug	FJB	561577	male
C304	2ndLuggCmpt.	560852	male	C607_socket	FJB	561605	female
C304	2ndLuggCmpt.	560851	female	C607A		561577	male
C305	2ndLuggCmpt.	560852	male	C607A	FJB	561605	female
C305	2ndLuggCmpt.	560851	female	C607B	FJB	561577	male
C380A	Dash	564222	male	C607B	FJB	561605	female
C380A	Dash	564224	female	C617	Mirror_LH	563801	male
C397	RJB	562285	male	C617	Mirror_LH	563800	female
C397	RJB	562282	female	C618	Mirror_RH	563801	male
C463	EngineCmpt.	568112	male	C618	Mirror_RH	563800	female
C463	EngineCmpt.	568111	female	C_ALT	EngineCmpt.	562581	male
C464A	RJB	564222	male	C_ALT	EngineCmpt.	562583	female
C464A	RJB	564224	female	C_ALT3	EngineCmpt.	562477	male
C540	Driver_Area	562477	male	C_ALT3	EngineCmpt.	562479	female

CONNECTORS LIST

No	Location	Part #	Gender	No	Location	Part #	Gender
C_Mo9	Evap_Cmpt	561577	male	L59B	OutsideFrontRH	562623	male
C_Mo9	Evap_Cmpt	561605	female	L60	OutsideFrontLH	562623	male
C_Se51	FJB	563589	male	L60A	OutsideFrontLH	563366	male
C_Se51	FJB	563590	female	L60B	OutsideFrontLH	562623	male
CCust	RJB	562477	male	L61	OutsideFrontRH	562601	male
CCust	RJB	562479	female	L62	OutsideFrontLH	562601	male
CF167	RH_Console	562350	male	L63	FrontSideRH	562155	male
CF167	RH_Console	563764	female	L64	OutsideFrontRH	562155	male
CInt1	FJB	563227	male	L65	FrontSideLH	562155	male
CInt1	FJB	563614	female	L66	OutsideFrontLH	562155	male
CInt2	FJB	563226	male	L67	3rdLuggCmpt.	562155	male
CInt2	FJB	563613	female	L68	3rdLuggCmpt.	562155	male
CSo1	SlideOutPanel	562581	male	L69	EvapCmpt.	562155	male
CSo1	SlideOutPanel	562583	female	L70	EvapCmpt.	562155	male
CSo2	SlideOutPanel	561643	male	L71A	RearVehicleLH	562601	male
CSo2	SlideOutPanel	561641	female	L72	Rear_VehicleLH	562155	male
CSo5	SlideOutPanel	561847	male	L73A	RearVehicleRH	562601	male
CSo5	SlideOutPanel	561862	female	L74	RearVehicleRH	562155	male
CSo7	SlideOutPanel	562581	male	L75	RearVehicleLH	562155	male
CSo7	SlideOutPanel	562583	female	L76	RearVehicleRH	562155	male
CT_In	Rear_Vehicle	563582	male	L77A	RearVehicleRH	562601	male
CT_In	Rear_Vehicle	563583	female	L78A	RearVehicleRH	562601	male
CT_Out	Rear_Vehicle	560478	female	L79A	RearVehicleLH	562601	male
D3.1	EngineDoor	560082	female	L80A	RearVehicleLH	562601	male
D3.2	EngineDoor	560082	female	L81.A	DPFDoor	562835	female
EI	EngineCmpt.	563739	male	L81.B	DFPDoor	562834	male
L1A	EngineCmpt.	562848	male	L82A	EngineDoor	562348	female
L10	Dash	561247	male	L83A	EngineDoor	562348	female
L16.A	FrontRoof	562615	female	L84.	RrRoof	562486	female
L16.B	FrontRoof	562615	female	L85.	RrRoof	562486	female
L17.A	FrontRoof	562615	female	L86.	RrRoof	562486	female
L17.B	FrontRoof	562615	female	L87.	RrRoof	562486	female
L18.A	EntraceDoor	561626	female	L88.	RrRoof	562486	female
L18.B	EntraceDoor	561626	female	L89.	RrRoof	562486	female
L21.	OutsideFront	560605	female	L90.	RrRoof	562486	female
L22.	OutsideFront	560605	female	L91A	RearVehiculeLH	562601	male
L23.	OutsideFront	560605	female	L92A	RearVehicleRH	562601	male
L24.	OutsideFront	560605	female	L93.A	RearOutsideLH	563069	female
L25.	OutsideFront	560605	female	L93.B	RearOutsideLH	563069	female
L26.	OutsideFront	560605	female	L94.A	RearOutsideRH	563069	female
L27.	OutsideFront	560605	female	L94.B	RearOutsideRH	563069	female
L59	OutsidefrontRH	562623	male	L95	Outside_Front_LH	562902	female
L59A	OutsideFrontRH	563366	male	L96	Outside_Front_RH	562902	female

CONNECTORS LIST

No	Location	Part #	Gender	No	Location	Part #	Gender
L97.A	Outside_Front_LH	563069	female	L285.B	Rear_Vehicle	562834	male
L97.B	Outside_Front_LH	563069	female	L286.A	Rear_Vehicle	562835	female
L98.A	EntraceDoor	563069	female	L286.B	Rear_Vehicle	562834	male
L98.B	EntraceDoor	563069	female	L298A	EngineCmpt.	563590	female
L120	DriverSeat	562237	female	L304	OutsideLuggDoorLH	562155	male
L173	EngineCmpt.	563590	female	L305	OutsideLuggDoorRH	562155	male
L174A	EngineCmpt.	563590	female	L306	Radiator_Door	562155	male
L176	3rd_Lugg_Cmpt	561247	male	L307	Radiator_Door	562155	male
L177	3rd_Lugg_Cmpt	561247	male	L309	RJB	561247	male
L178	4thLuggCmpt.	561247	male	L350A.A	RearAxleCmpt.	564552	male
L179	4thLuggCmpt.	561247	male	L350A.B	RearAxleCmpt.	563340	male
L180	2nd_Lugg_Cmpt	561247	male	L350A.C	RearAxleCmpt.	562251	male
L181	2nd_Lugg_Cmpt	561247	male	Mo3	Dash	561667	female
L182	1st_Lugg_Cmpt	561247	male	Mo4	Dash	564161	male
L183	1st_Lugg_Cmpt	561247	male	Mo7	Cond_Cmpt	560159	female
L184	ServiceCmpt.	561247	male	Mo8	Cond_Cmpt	560159	female
L185.A	Dash	561539	male	Mo11	Cond_Cmpt	568089	male
L185.B	Dash	561539	male	Mo12	Engine_Cmpt	561690	male
L186.A	Dash	561539	male	Mo15.	FrCeling	563517	female
L186.B	Dash	561539	male	Mo16.	FrCeling	563517	female
L187	Engine_Cmpt	561690	male	Mo17	RH_Console	563626	male
L193.A	Dash	560488	female	Mo19	Fr_Service_Door	562474	male
L193.B	Dash	560488	female	Mo20	Fr_Service_Door	562474	male
L194.A	Dash	560488	female	Mo22	RH_Console	561186	male
L194.B	Dash	560488	female	Mo24	RH_Console	562348	female
L195.A	Dash	560488	female	Mo25	RH_Console	562348	female
L195.B	Dash	560488	female	Mo26	EntraceDoor	564161	male
L199	EngineCmpt.	562848	male	Mo27	Cond_Cmpt	560159	female
L203	RH_Console	561690	male	Mo28	Cond_Cmpt	560159	female
L204	WCL_Upper_Door	562803	male	Mo29	RJB	563590	female
L205	EvapCmpt.	562485	male	Mo30	1stLuggCmpt.LH	564161	male
L206	WCL_Upper_Door	562803	male	Mo31	1stLuggCmpt.RH	564161	male
L207.A	WCL_System	561699	female	Mo32	2ndLuggCmpt.LH	564161	male
L207.B	WCL_System	561701	female	Mo33	2ndLuggCmpt.RH	564161	male
L207.C	WCL_System	561701	female	Mo34	3rdLuggCmpt.LH	564161	male
L207.D	WCL_System	561699	female	Mo35	3rdLuggCmpt.RH	564161	male
L207.E	WCL_System	561701	female	Mo36	CompressorDoor	564161	male
L207.F	WCL_System	561699	female	Mo37	4thLuggCmpt.RH	564161	male
L207.G	WCL_System	561699	female	Mo38	4thLuggCmpt.LH	564161	male
L207.H	WCL_System	560926	female	Mo40	1stLuggCmpt.LH	561477	female
L207.I	WCL_System	560926	female	Mo41	2ndLuggCmpt.LH	561477	female
L282	Preheater_Cmpt	561690	male	Mo42	3rdLuggCmpt.LH	561477	female
L285.A	Rear_Vehicle	562835	female	Mo43	3rdLuggCmpt.LH	561477	female

CONNECTORS LIST

No	Location	Part #	Gender	No	Location	Part #	Gender
Mo50	FrontAxleCmpt.	561690	male	Res20	FJB	563590	female
Mo54	Service_Cmpt	562474	male	Res31	UreaCmpt.	562350	male
Mo55	EntraceDoor	563626	male	Res32	UreaCmpt.	563764	female
Mo65	EngineCmpt.	568089	male	Res53.A	CondensorCmpt.	563590	female
Mo67	EngineCmpt.	568089	male	Res99	Dash	563590	female
Mo68	EngineCmpt.	568089	male	RSO1_1	SlideOutPanel	564496	male
Mo69	EngineCmpt.	568089	male	RSO1_2	SlideOutPanel	564496	male
Mo70	EngineCmpt.	568089	male	RSO2_1	SlideOutPanel	564496	male
Mo71	EngineCmpt.	568089	male	RSO2_2	SlideOutPanel	564496	male
Mo72	EngineCmpt.	568089	male	Se2A	Service_Cmpt	561566	female
Mo73	EngineCmpt.	568089	male	Se11.A	Cond_Cmpt	560082	female
MoSO1	FrontSlideOut	562350	male	Se11.B	Cond_Cmpt	560082	female
MoSO2	RearSlideOut	562350	male	Se11.C	Cond_Cmpt	560082	female
PC1	CantrackCable	562650	male	Se13	Engine_Cmpt	563764	female
PC1	CantrackCable	562649	female	Se14..A	Driver_Area	561782	male
R1.A	RJB	562486	female	Se14..B	Driver_Area	561781	female
R3	RJB	563409	male	Se15.A	EntraceDoor	560488	female
R6	Dash	564496	male	Se15.B	EntraceDoor	560488	female
R6A	Dash	564496	male	Se15.C	EntraceDoor	560488	female
R12	Evap_Cmpt	563409	male	Se16.A	EntraceDoor	562651	female
R21	FJB	560525	male	Se16.B	EntraceDoor	562651	female
R23A	FJB	564496	male	Se17.A	EntraceDoor	562291	female
R27	Dash	564496	male	Se17.B	EntraceDoor	562291	female
R29	RJB	563409	male	Se17.C	EntraceDoor	562291	female
R30	FJB	564496	male	Se19_P	Service_Cmpt	563677	male
R31	FJB	564496	male	Se19_S	Service_Cmpt	563677	male
R35	RJB	564210	male	Se20.	Front_Axle_Cmpt	562426	male
R36	Dash	564496	male	Se21	Dash	561248	female
R37	Dash	564496	male	Se23	EngineCmpt.	563159	female
R38	FJB	564496	male	Se23A	EngineCmpt.	563159	female
R40	FJB	564496	male	Se24	EngineCmpt.	563758	female
R47	WCL_System	564496	male	Se24A	EngineCmpt.	563758	female
R167	RH_Console	564496	male	Se25	EvapCmpt.	561248	female
Res37A		563590	female	Se30	EngineCmpt.	562877	female
Res37B		563590	female	Se31	EngineCmpt.	562877	female
Res3	ParcelRack	563590	female	Se32	Rear_Axle_Cmpt	562426	male
Res4	RH_Console	563590	female	Se33	Rear_Axle_Cmpt	562856	male
Res6	FJB	563590	female	Se34	Rear_Axle_Cmpt	562427	male
Res7	Dashboard	563590	female	Se35	Rear_Axle_Cmpt	562426	male
Res15	Engine_Cmpt	561782	male	Se36	Rear_Axle_Cmpt	562427	male
Res16	ParcelRack	563590	female	Se37	Front_Axle_LH	641132	female
Res17	ParcelRack	563590	female	Se38	Front_Axle_RH	641132	female
Res19	FJB	563590	female	Se39	Rear_Axle_LH	641132	female

CONNECTORS LIST

No	Location	Part #	Gender	No	Location	Part #	Gender
Se40	Rear_Axle_LH	641132	female	So52	FrontAxleCmpt.	564045	female
Se45	ServiceCmpt.	563409	male	spBar4	EngineCmpt.	564135	male
Se46	RearAxleCmpt.	562348	female	spBar5	EngineCmpt.	564135	male
Se49	EngineCmpt.	561690	male	spBar6	EngineCmpt.	564135	male
Se51	DriverSeat	563589	male	spBar7	CondCmpt.	564135	male
Se53	Service_Cmpt	563159	female	spBar11	EngineCmpt.	564135	male
Se54	Service_Cmpt	563159	female	spBar12	EngineCmpt.	564135	male
Se55	Service_Cmpt	563159	female	spBar13	EngineCmpt.	564135	male
Se56	WCLcompt.	562884	female	spBar14	EngineCmpt.	564135	male
Se57	PneumaticPanel	563159	female	spBar15	EngineCmpt.	564135	male
Se60	Service_Cmpt	563409	male	spBar16	EngineCmpt.	564135	male
Se62	WCL_system	561690	male	spBar19	CondCmpt.	564135	male
Se63	RearAxleCmpt.	641132	female	spBar20	CondCmpt.	564135	male
Se64	RearAxleCmpt.	641132	female	spBar21	CondCmpt.	564135	male
Se65	Dash	564042	female	spBar22	EngineCmpt.	564135	male
Se66	FrontAxleCmpt.	564039	female	spBar23	EngineCmpt.	564135	male
Se67	ServiceCmpt.	563159	female	spBar24	EngineCmpt.	564135	male
Se69	ServiceCmpt.	563159	female	Sw1.C258	Driver_Area	561188	female
Se89	EngineCmpt	563764	female	Sw1.C259	Driver_Area	561186	male
Se94	WCL_system	562877	female	Sw2	Dash	562763	male
Se100	WCL_Upper_Door	562479	female	Sw3	Dash	562763	male
SESO1	SlideOutPanel	563159	female	Sw4	Dash	562763	male
SESO2_SESO3	Frontslideout	562479	female	Sw6	Dash	562763	male
SESO5_SESO6	Rearslideout	562479	female	Sw14	Dash	562763	male
So3	RHConsole	641385	male	Sw16	Dash	562763	male
So7	Service_Cmpt	561566	female	Sw17	Dash	562763	male
So8	ServiceCmpt.	641385	male	Sw18A	LH_Console	562763	male
So9	EngineCmpt.	560016	female	Sw20	Dashboard	562763	male
So11	Cond_Cmpt	561566	female	Sw24	Dash	562763	male
So13	Evap_Cmpt	563204	female	Sw24A	Dash	562763	male
So17	Service_Cmpt	562848	male	Sw34	Dash	562763	male
So21	Front_Axle_Cmpt	564046	female	SW34A	Dash	562763	male
So22	Front_Axle_Cmpt	564046	female	SW34B	Dash	562763	male
So23	Rear_Axle_Cmpt	564046	female	Sw35	LHConsole	562763	male
So24	Rear_Axle_Cmpt	564046	female	Sw38	LH_Console	562763	male
So27	RearAxleCmpt.	564045	female	Sw40	LH_Console	561690	male
So28	ServiceCmpt.	641385	male	Sw41	LH_Console	562749	male
So29	ServiceCmpt.	641385	male	Sw42	WCL_System	561636	female
So30	ServiceCmpt.	641385	male	Sw44.A	ServiceCmpt.	562403	female
So31	ServiceCmpt.	641385	male	Sw45.A	3rd_Lugg_Cmpt	562403	female
So32	ServiceCmpt.	641385	male	Sw45.B	3rdLuggCmpt.	562403	female
So36	EngineCmpt.	561690	male	Sw46.A	3rd_Lugg_Cmpt	562403	female
So50	RearAxleCmpt.	564046	female	Sw46.B	3rdLuggCmpt.	562403	female

CONNECTORS LIST

No	Location	Part #	Gender	No	Location	Part #	Gender
Sw46A.A	3rd_RH_Lugg_Cmpt	562403	female	Sw158	Dash	562763	male
Sw46A.B	3rd_RH_Lugg_Cmpt	562403	female	Sw161	Dash	562763	male
Sw47.A	4thLuggCmpt.	562403	female	Sw165	RH_Console	562763	male
Sw47.B	4thLuggCmpt.	562403	female	Sw165A	RH_Console	562763	male
Sw48.A	4thLuggCmpt.	562403	female	Sw166	RH_Console	562763	male
Sw48.B	4thLuggCmpt.	562403	female	Sw167	RH_Console	562763	male
Sw49.A	2nd_Lugg_Cmpt	562403	female	SwSo1	FrontSlideOut	561552	female
Sw49.B	2ndLuggCmpt.	562403	female	SwSo2	RearSlideOut	561552	female
Sw50.A	2nd_Lugg_Cmpt	562403	female	tab0ff	FJB	560096	N/A
Sw51.A	1st_Lugg_Cmpt	562403	female	TBat1	RJB	561696	N/A
Sw52.A	1st_Lugg_Cmpt	562403	female	TBat3	RJB	561696	N/A
Sw58.A	EngineCmpt.	563135	male	TBat5	RJB	561696	N/A
Sw59	EngineCmpt.	563135	male	TBat9	RJB	560895	N/A
Sw63A	LHConsole	562763	male	TBat10	RJB	560895	N/A
Sw64.A	ServiceCmpt.	560815	female	TBat11	RJB	560895	N/A
Sw64.B	Ssp	560815	female	TBat12	RJB	560895	N/A
Sw82	RJB	563135	male	TBat13	RJB	560039	N/A
Sw83.A	Dash	560082	female	TBat15	RJB	565164	N/A
Sw83.B	Dash	560815	female	TBat18	RJB	560895	N/A
Sw83.C	Dash	560082	female	TBat19	RJB	560894	N/A
Sw83.D	Dash	560815	female	TBat20	RJB	560891	N/A
Sw85	LH_Console	562749	male	TBat21	RJB	560891	N/A
Sw99	Dash	562763	male	TBat22	RJB	560891	N/A
Sw102	Dash	562763	male	TBat23	RJB	560891	N/A
Sw103A	LHConsole	562763	male	TBat24	RJB	560895	N/A
Sw104	Dash	562763	male	TBat25	RJBMasterRelay	560895	N/A
Sw107.A	LHConsole	561457	female	TBat35	RJB	560083	N/A
Sw107.B	LHConsole	561457	female	TBat39	RJB	560895	N/A
Sw107.C	LHConsole	561457	female	TBat40	RJB	564166	N/A
Sw107.D	LHConsole	561457	female	term57		562101	N/A
Sw107.E	LHConsole	561457	female	Term00A	FJB	560928	N/A
Sw107.F	LHConsole	561457	female	Term0A.	FJBGndStud	560083	N/A
Sw107.G	LHConsole	561457	female	Term0A1	FJBGndStud	561964	N/A
Sw107.H	LHConsole	561457	female	Term00A1	FJB	560928	N/A
Sw107.J	LHConsole	561457	female	Term0Cond1	EvapCmpt.ChassisGndStud	561560	N/A
Sw107.K	LHConsole	561457	female	Term0Cond2	EvapCmpt.ChassisGndStud	561246	N/A
Sw108	LHConsole	562763	male	Term0EV1.	EvapCmpt.ChassisGndStud	564220	N/A
Sw122	ServiceCmpt.	562763	male	Term00F	RJB	560086	N/A
Sw123	Dash	562763	male	Term0F.	FJBGndStud	560083	N/A
Sw137	Dash	562763	male	Term00F1	FJB	563354	N/A
Sw152	Driver_Area	562471	male	Term00F2	FJB	563354	N/A
Sw156	LH_Console	562763	male	Term00F3	FJB	560928	N/A
Sw157	Dash	562763	male	Term00F4	FJB	560096	N/A

CONNECTORS LIST

No	Location	Part #	Gender	No	Location	Part #	Gender
Term00F5	FJB	560086	N/A	Term629	Fr_LH_P_Rack	564005	N/A
Term00FH	FJB	560928	N/A	Term646	Fr_LH_P_Rack	563622	N/A
Term0FH.	FJBGndStud	560083	N/A	Term647	Fr_LH_P_Rack	564005	N/A
Term00FH1	FJB	560086	N/A	Term648	Fr_LH_P_Rack	563622	N/A
Term0FH1.	FJBGndStud	560083	N/A	Term649	Fr_LH_P_Rack	563622	N/A
Term00FH2	FJB	563354	N/A	Term654	Fr_LH_P_Rack	563623	N/A
Term00R1	RJB	560086	N/A	Term_Alt_Gnd_EXTR	Engine_Cmpt	564115	N/A
Term0R1.	RJBChassisGndStud	561246	N/A	Term_Alt_Gnd_EXTR1	FJBGndStud	561696	N/A
Term00R2	RJB	560086	N/A	Term_Alt_Gnd_UL	Engine_Cmpt	560027	N/A
Term00R3	RJB	563354	N/A	Term_Alt_Gnd_UL1	FJBGndStud	564116	N/A
Term00R4	RJB	563354	N/A	Term_Alt_UR	Engine_Cmpt	568125	N/A
Term00R5	RJB	563354	N/A	Term_AltUR_Bat	Engine_Cmpt	568125	N/A
Term00R6	RJB	560086	N/A	Term_CB1	RJBBreakersPanel	564025	N/A
Term4	RJB(RelayR3)	563329	N/A	Term_CB2	RJB	564024	N/A
Term5	RJBBreakersPanel	561696	N/A	Term_CB2A	RJBBreakersPanel	561560	N/A
Term7	RJB	561696	N/A	Term_CB3	RJBBreakersPanel	564025	N/A
Term12ECU	RJB	560926	N/A	Term_CB5	RJBBreakersPanel	564025	N/A
Term16	RH_Console	560082	N/A	Term_CB6	RJB	564024	N/A
Term20	FJBGndStud	561696	N/A	Term_CB6A	RJB_Breakers_panel	561560	N/A
Term36	FJBGndStud	560895	N/A	Term_CB7	RJBBreakersPanel	561560	N/A
Term37	FJBGndStud	560894	N/A	Term_CB8	RJBBreakersPanel	564025	N/A
Term46	Evap_Cmpt	564220	N/A	Term_CB9A	RJB_Breakers_panel	561246	N/A
Term47	RJB	561560	N/A	Term_CB10	RJBBreakersPanel	564026	N/A
Term50	RJB	561626	N/A	Term_sp00A	RH_Console	563623	N/A
Term54	RJB	564516	N/A	Term_spC71_19		563622	N/A
Term64	Evap_Cmpt	564220	N/A	TermAFSS.	Luggage_Cmpt	560083	N/A
Term106	RJB	{part_no5	N/A	TermAltLL	Engine_Cmpt	565166	N/A
Term107	RJB	{part_no5	N/A	TermNeg	Engine_Cmpt	560086	N/A
Term116	Engine_Cmpt	563538	N/A	TermPos	Engine_Cmpt	560086	N/A
Term117	Engine_Cmpt	563538	N/A	TermR12-3	Evap_Cmpt	560103	N/A
Term126	RJB(RelayR3)	563746	N/A	TermR12-5	Evap_Cmpt	561788	N/A
Term127	RJB(RelayR3)	563749	N/A	TermR21-A	FJB	560076	N/A
Term131	RJB(RelayR3)	563746	N/A	TermR21-B	FJB	560076	N/A
Term132	FJBGndStud	560895	N/A	TermStar4	RJBBreakersPanel	560106	N/A
Term135	Engine_Cmpt	564093	N/A	TermStart1	Engine_Cmpt	560103	N/A
Term141	Engine_Cmpt	565166	N/A	TermStart2	Engine_Cmpt	560103	N/A
Term149.	UreaCmpt.	561964	N/A	TermStart3	Engine_Cmpt	560103	N/A
Term149A.	UreaCmpt.	561964	N/A	TermStpG1	FJB	560082	N/A
Term176	DriverSeat	560082	N/A	TGND_TR	EvapCmpt.ChassisGndStud	560083	N/A
Term617	Driver_Area	560082	N/A	TGNDF1	FJB	561458	N/A
Term618	Fr_LH_P_Rack		N/A	TGNDR3	RJB	561458	N/A
Term619	Fr_LH_P_Rack	563623	N/A	TGNDR4	RJB	561458	N/A
Term628	Fr_LH_P_Rack	563622	N/A	VECF1	FJB	563186	male

CONNECTORS LIST

No	Location	Part #	Gender				
VECF2	FJB	563183	male				
VECF3	FJB	563185	male				
VECF4	FJB	563182	male				
VECF9	FJB	563448	male				
VECF10	FJB	563181	male				
VECF11	FJB	563184	male				
VECF12	FJB	563187	male				
VECR1	RJB	563186	male				
VECR2	RJB	563183	male				
VECR3	RJB	563185	male				
VECR4	RJB	563182	male				
VECR9	RJB	563448	male				
VECR10	RJB	563181	male				
VECR11	RJB	563184	male				
VECR12	RJB	563187	male				
VECT2	Rear_Vehicle	563716	male				
VECT3	RearVehicle	563718	male				
VECT4	RearVehicle	563714	male				
Y80	Engine_Cmpt	563789	male				
Y81	Cond_Cmpt	563793	male				

CONNECTORS LIST

No	Location	Part #	Gender	No	Location	Part #	Gender
A1	RJB	563975	male	A81.CN3B	FJB	564742	male
A2A	FJB	563984	male	A83	Parcelrack	565970	female
A3	Dash	562363	male	A97	Dash	563226	male
A4.A	Service_Cmpt	562428	female	A97A	Dash	563226	male
A4.B	Service_Cmpt	561188	female	A97A	Dash	563613	female
A5	Service_Cmpt	562428	female	A97B	Dash	563226	male
A6	Engine_Cmpt	562427	male	A97B	Dash	563613	female
A7	Rear_Axle_Cmpt	563979	male	A99	FJB	564205	male
A9.Cx1	FJB	564041	female	A103	Dash	562070	female
A9.Cx2	FJB	563678	male	A106	FrontVehicle	565974	male
A9.Cx3	FJB	564037	female	A114A	Dash	564252	male
A9.Cx4	FJB	564038	female	A116	DASH	563872	female
A14.A	Dash	562766	male	A130	Driver_Area	563226	male
A14.B	Dash	562767	male	A131.A	Engine_Cmpt	561782	male
A14.C	Dash	562765	male	A131.B	Engine_Cmpt	561781	female
A15	Dash	562464	male	A137A	CondensorCmpt.	20429843	male
A24.A	RH_Console	561890	male	A138	Cond_Cmpt	563787	male
A24.B	RH_Console	561566	female	A139	Dash	564501	male
A24.C	RH_Console	561889	female	A222M..A	DriverArea	563040	female
A27	Service_Cmpt	562929	male	A222M..B	DriverArea	565871	female
A28	Service_Cmpt	562928	male	A222M..C	DriverArea	564537	female
A30.A	Dash	561611	male	A222W..A	FrontLH	563409	male
A30.C	Dash	561889	female	A222W..B	FrontLH	563409	male
A31.J1	Dash	562780	male	A223M..A	RHDASH	563040	female
A31.J2	Dash	562842	male	A223M..B	RHDASH	565871	female
A31.J3	Dash	562464	male	A223M..C	RHDASH	564537	female
A31.J4	Dash	562465	male	A223W..A	FrontRH	563409	male
A31.J5	Dash	563071	male	A223W..B	FrontRH	563409	male
A34.J	EngineCmpt.	568118	male	A242.A		564221	male
A34.K	EngineCmpt.	564270	male	AE41.J1	FJB	563679	male
A34.L	EngineCmpt.	564269	male	AE41.J2	FJB	564037	female
A36A.JA		564325	male	AE41.J3	FJB	564004	male
A36A.JB		562767	male	AE42.J1	FJB	563679	male
A37A.JA		564325	female	AE42.J2	FJB	564037	female
A37A.JB		562767	female	AE42.J3	FJB	564004	male
A38	Dash	563884	male	AE43.J1	FJB	563679	male
A40.A	FJB	561668	male	AE43.J2	FJB	564037	male
A77	Parcelrack	564547	male	AE43.J3	FJB	565957	male
A78	Parcelrack	562583	female	AE44.J1	FJB	563679	male
A79	Parcelrack	562583	female	AE44.J2	FJB	564037	female
A80	Parcelrack	562479	female	AE44.J3	FJB	565957	male
A81.CN1	FJB	562767	male	AE44_1_1210.J1	RJB	563679	male
A81.CN3A	FJB	564741	male	AE44_1_1210.J2	RJB	564037	male

CONNECTORS LIST

No	Location	Part #	Gender	No	Location	Part #	Gender
AE44_1_1210.J3	RJB	565957	male	AltLL.A	EngineCmpt.	563746	female
AE45.J1	FJB	563679	male	AltLL.B	EngineCmpt.	560815	female
AE45.J2	FJB	564037	female	AltLL.C	EngineCmpt.	564469	female
AE45.J3	FJB	565957	male	AltUL.A	EngineCmpt.	563746	female
AE46.J1	FJB	563679	male	AltUL.B	EngineCmpt.	560815	female
AE46.J2	FJB	564037	female	AltUL.C	EngineCmpt.	564469	female
AE46.J3	FJB	565957	male	AltUR.A	EngineCmpt.	563746	female
AE47.J1	RHConsole	563679	male	AltUR.B	EngineCmpt.	560815	female
AE47.J2	RHConsole	564037	female	AltUR.C	EngineCmpt.	564469	female
AE47.J3	RHConsole	565957	male	B85	Engine_Cmpt	563815	male
AE48.J1	RHConsole	563679	male	B96	Engine_Cmpt	563821	male
AE48.J2	RHConsole	564037	female	B96B	Engine_Cmpt	563823	male
AE48.J3	RHConsole	565957	male	B97	Engine_Cmpt	563816	male
AE49.J1	RJB	563679	male	B98	Engine_Cmpt	563817	male
AE49.J2	RJB	564037	male	B99	Engine_Cmpt	563815	male
AE49.J3	RJB	565957	male	B115A	EngineCmpt.	564226	male
AE50.J1	RJB	563679	male	B142C	CondCMPT	563515	male
AE50.J2	RJB	564037	male	B310	EngineCmpt.	565967	male
AE50.J3	RJB	565957	male	C1	FJB	563589	male
AE51.J1	RJB	563679	male	C1	FJB	563590	female
AE51.J2	RJB	564037	female	C1S	FJB	563589	male
AE51.J3	RJB	565957	male	C1S	FJB	563590	female
AE52.J1	RJB	563679	male	C2	Service_Cmpt	563580	male
AE52.J2	RJB	564037	female	C2	Service_Cmpt	563581	female
AE52.J3	RJB	565957	male	C2A	FJB	563580	male
AE54.J1	EvaporatorCmpt.	563679	male	C2A	FJB	563581	female
AE54.J2	EvaporatorCmpt.	564037	female	C2B	FJB	564034	male
AE54.J3	EvaporatorCmpt.	565957	male	C2B	FJB	564035	female
AE55.J1	Dash	563679	male	C3_plug	RJB	563589	male
AE55.J2	Dash	564037	female	C3_socket	RJB	563590	female
AE55.J3	Dash	564004	male	C3S	RJB	563593	male
AE56.J1	Dash	563679	male	C3S	RJB	563590	female
AE56.J2	Dash	564037	male	C4	FJB	563580	male
AE56.J3	Dash	564004	male	C4	FJB	563581	female
AE57.J1	3rd_RH_Lugg_Cmpt	563679	male	C5	FJB	563589	male
AE57.J2	3rd_RH_Lugg_Cmpt	564037	male	C5	FJB	563590	female
AE57.J3	3rd_RH_Lugg_Cmpt	564004	male	C5S	FJB	563589	male
AE58.J1	SlideoutPanel	563679	male	C5S	FJB	563590	female
AE58.J2	SlideoutPanel	564037	male	C6	FJB	563582	male
AE58.J3	SlideoutPanel	565957	male	C6	FJB	563583	female
AE59.J1	SlideoutPanel	563679	male	C7	Service_Cmpt	562566	male
AE59.J2	SlideoutPanel	564037	male	C7	Service_Cmpt	562565	female
AE59.J3	SlideoutPanel	565957	male	C7A	Service_Cmpt	562789	male

CONNECTORS LIST

No	Location	Part #	Gender	No	Location	Part #	Gender
C7A	Service_Cmpt	565131	female	C34	RH_Console	561986	male
C8	FJB	563227	male	C34	RH_Console	561987	female
C8	FJB	563614	female	C35	RH_Console	561987	female
C9	RJB	561986	male	C35	RH_Console	561986	male
C9	RJB	561987	female	C37		563589	male
C10	Engine_Cmpt	562477	male	C37		563590	female
C10	Engine_Cmpt	562479	female	C39A	EngineCmpt.	561782	male
C11	Service_Cmpt	563580	male	C39A	EngineCmpt.	561781	female
C11	Service_Cmpt	563581	female	C40	Dash	562485	male
C12	Engine_Cmpt	562581	male	C40	Dash	562486	female
C12	Engine_Cmpt	562583	female	C44_plug	FJB	561577	male
C13_plug	RH_Console	563589	male	C44_socket	FJB	561605	female
C13_socket	RH_Console	563590	female	C45	FJB	561643	male
C13S	RH_Console	563589	male	C45	FJB	561642	female
C13S	RH_Console	563590	female	C46	WCL_System	562549	male
C14	FrontVehicle	562581	male	C46	WCL_System	562550	female
C14	FrontVehicle	562583	female	C49	FJB	562005	male
C15A	Evap_Cmpt	568110	male	C49	FJB	561714	female
C15A	Evap_Cmpt	568109	female	C50	RJB	563931	male
C17	RJB	560169	male	C50	RJB	563930	female
C17	RJB	560195	female	C52	EvaporatorCmpt.	563618	male
C18	FJB	561986	male	C52	EvaporatorCmpt.	563616	female
C18	FJB	561987	female	C54	EngineCmpt.	563226	male
C19	RJB	561986	male	C54	EngineCmpt.	563613	female
C19	RJB	561987	female	C54A	EngineCmpt.	568110	male
C23	Evap_Cmpt	564034	male	C54A	EngineCmpt.	568109	female
C23	Evap_Cmpt	564035	female	C54B	EngineCmpt.	563589	male
C24_plug	Evap_Cmpt	561690	male	C54B	EngineCmpt.	563590	female
C24_socket	Evap_Cmpt	561566	female	C58	CondensorCmpt.	564567	male
C26	UreaCmpt.	563226	male	C58	CondensorCmpt.	564568	female
C26	UreaCmpt.	563613	female	C58A	CondensorCmpt.	564258	male
C26A	UreaCmpt.	568110	male	C58A	CondensorCmpt.	566037	female
C26A	UreaCmpt.	568109	female	C59	3rdLuggCmpt.	561643	male
C26B	UreaCmpt.	563227	male	C59	3rdLuggCmpt.	561642	female
C26B	UreaCmpt.	563614	female	C61	Fr_Service_Door	561669	male
C29	WCL_System	563651	male	C61	Fr_Service_Door	561670	female
C29	WCL_System	563652	female	C62	Fr_Service_Door	562566	male
C30	WCL_System	561710	male	C62	Fr_Service_Door	562565	female
C30	WCL_System	561709	female	C64	EngineCmpt.	568110	male
C32W	3rd_RH_Lugg_Cmpt	561640	male	C64	EngineCmpt.	568109	female
C32W	3rd_RH_Lugg_Cmpt	561639	female	C71	FJB	561646	male
C33	3rd_RH_Lugg_Cmpt	564034	male	C71	FJB	561645	female
C33	3rd_RH_Lugg_Cmpt	564035	female	C72	FJB	561646	male

CONNECTORS LIST

No	Location	Part #	Gender	No	Location	Part #	Gender
C72	FJB	561645	female	C101	Service_Cmpt	561690	male
C74	FJB	561645	female	C101	Service_Cmpt	561566	female
C74	FJB	561646	male	C102A	CondCmpt.	563226	male
C80	EvaporatorCmpt.	562477	male	C102A	CondCmpt.	563613	female
C80	EvaporatorCmpt.	562479	female	C104S_plug	3rdLuggCmpt.	563589	male
C81	1st_Lugg_Cmpt	562477	male	C104S_socket	3rdLuggCmpt.	563590	female
C81	1st_Lugg_Cmpt	562479	female	C105_plug	FJB	562581	male
C82	1st_Lugg_Cmpt	562477	male	C105_socket	FJB	562583	female
C82	1st_Lugg_Cmpt	562479	female	C106_plug	FJB	562581	male
C83	2nd_Lugg_Cmpt	562477	male	C106_socket	FJB	562583	female
C83	2nd_Lugg_Cmpt	562479	female	C110	PneumPanel	568110	male
C84	2nd_Lugg_Cmpt	562477	male	C110	PneumPanel	568109	female
C84	2nd_Lugg_Cmpt	562479	female	C114	3rd_RH_Lugg_Cmpt	561550	male
C85	4rd_Lugg_Cmpt	562477	male	C114	3rd_RH_Lugg_Cmpt	561667	female
C85	4rd_Lugg_Cmpt	562479	female	C119A	EngineDoor	568110	male
C86	4rd_Lugg_Cmpt	563618	male	C119A	EngineDoor	568109	female
C86	4rd_Lugg_Cmpt	563616	female	C121	EngineDoor	562566	male
C87	EngineCmpt.	562485	male	C121	EngineDoor	562565	female
C87	EngineCmpt.	562486	female	C122	EngineDoor	562566	male
C88	3rd_RH_Lugg_Cmpt	563618	male	C122	EngineDoor	562565	female
C88	3rd_RH_Lugg_Cmpt	563616	female	C129	DASH	562464	male
C89	CondensorCmpt.	562477	male	C129	DASH	565871	female
C89	CondensorCmpt.	562479	female	C129B		563858	male
C91	RJB	562285	male	C129B		563859	female
C91	RJB	562282	female	C130	dash	562581	male
C92A	EngineCmpt.	563226	male	C130	Dash	562583	female
C92A	EngineCmpt.	563613	female	C131A	EngineCmpt.	561782	male
C92C	EngineCmpt.	562581	male	C131A	EngineCmpt.	561781	female
C92C	EngineCmpt.	562583	female	C131B	EngineCmpt.	561782	male
C94_plug	FJB	563589	male	C131B	EngineCmpt.	561781	female
C94_socket	FJB	563590	female	C132	RHConsol	561515	male
C94A		563589	male	C132	RHConsol	561552	female
C94A		563590	female	C133	Dash	561986	male
C94B		563589	male	C133	Dash	561987	female
C94B		563590	female	C133A	RHConsole	561986	male
C96	FJB	561643	male	C133A	RHConsole	561987	female
C96	FJB	561642	female	C134_plug	Dash	561577	male
C97	FJB	561643	male	C134_socket	Dash	561605	female
C97	FJB	561642	female	C152	Cond_Cmpt	561611	male
C100	EvaporatorCmpt.	562477	male	C152	Cond_Cmpt	561610	female
C100	EvaporatorCmpt.	562479	female	C158	CondensorCmpt.	562477	male
C100S	EvaporatorCmpt.	562477	male	C158	CondensorCmpt.	562479	female
C100S	EvaporatorCmpt.	562479	female	C159	CondensorCmpt.	566033	male

CONNECTORS LIST

No	Location	Part #	Gender	No	Location	Part #	Gender
C159	CondensorCmpt.	566034	female	C305	2ndLuggCmpt.	560852	male
C160	FJB	562477	male	C305	2ndLuggCmpt.	560851	female
C160	FJB	562479	female	C380A	Dash	564222	male
C160_RH	Roof_Fr_RH	562485	male	C380A	Dash	564224	female
C160_RH	Roof_Fr_RH	562486	female	C397	RJB	562285	male
C161_LH	Roof_LH_Fr	562485	male	C397	RJB	562282	female
C161_LH	Roof_LH_Fr	562486	female	C463	EngineCmpt.	568112	male
C170	LH_Console	561637	male	C463	EngineCmpt.	568111	female
C170	LH_Console	561636	female	C464A	RJB	564222	male
C171	LH_Console	561646	male	C464A	RJB	564224	female
C171	LH_Console	561645	female	C540	Driver_Area	562477	male
C172	LHConsole	561637	male	C540	Driver_Area	562479	female
C172	LHConsole	561635	female	C541	Driver_Area	563226	male
C193_plug	RJB	563589	male	C541	Driver_Area	563613	female
C193_socket	RJB	563590	female	C551	3rdLuggCmpt.	561476	male
C194	FJB	563589	male	C551	3rdLuggCmpt.	561477	female
C194	FJB	563590	female	C553	2ndLuggCmpt.	561476	male
C195	Dash	563347	male	C553	2ndLuggCmpt.	561477	female
C195	Dash	560489	female	C554	1stLuggCmpt.	561476	male
C222	FJB	562477	male	C554	1stLuggCmpt.	561477	female
C222	FJB	562479	female	C555	1stLuggCmpt.	561476	male
C223	FJB	563227	male	C555	1stLuggCmpt.	561477	female
C223	FJB	563614	female	C556	3rdLuggCmpt.	561476	male
C224	FJB	561637	male	C556	3rdLuggCmpt.	561477	female
C224	FJB	561636	female	C557	2ndLugg.Cmpt.	561476	male
C225	FJB	562650	male	C557	2ndLuggCmpt.	561477	female
C225	FJB	562649	female	C559	3rdLuggCmpt.	561476	male
C226	FJB	562650	male	C559	3rdLuggCmpt.	561477	female
C226	FJB	562649	female	C560	3rdLuggCmpt.	561476	male
C228	EngineCmpt.	562477	male	C560	3rdLuggCmpt.	561477	female
C228	EngineCmpt.	562479	female	C561	3rdLuggCmpt.	561476	male
C242	ServiceCmpt.	562789	male	C561	3rdLuggCmpt.	561477	female
C242	ServiceCmpt.	565131	female	C562	3rdLuggCmpt.	561476	male
C243.	ServiceCmpt.	562789	male	C562	3rdLuggCmpt.	561477	female
C243.	ServiceCmpt.	565131	female	C606_plug	FJB	561690	male
C266	EntraceDoor	561640	male	C606_socket	FJB	561566	female
C266	EntraceDoor	561639	female	C606A	FJB	561690	male
C279	Service_Cmpt	562477	male	C606A	FJB	561566	female
C279	Service_Cmpt	562479	female	C606B	FJB	561690	male
C290	Rear_Vehicle	562477	male	C606B	FJB	561566	female
C290	Rear_Vehicle	562479	female	C607_plug	FJB	561577	male
C304	2ndLuggCmpt.	560852	male	C607_socket	FJB	561605	female
C304	2ndLuggCmpt.	560851	female	C607A		561577	male

CONNECTORS LIST

No	Location	Part #	Gender	No	Location	Part #	Gender
C607A	FJB	561605	female	L18.A	EntraceDoor	561626	female
C607B	FJB	561577	male	L18.B	EntraceDoor	561626	female
C607B	FJB	561605	female	L21.	OutsideFront	560605	female
C617	Mirror_LH	563801	male	L22.	OutsideFront	560605	female
C617	Mirror_LH	563800	female	L23.	OutsideFront	560605	female
C618	Mirror_RH	563801	male	L24.	OutsideFront	560605	female
C618	Mirror_RH	563800	female	L25.	OutsideFront	560605	female
C_ALT	EngineCmpt.	562581	male	L26.	OutsideFront	560605	female
C_ALT	EngineCmpt.	562583	female	L27.	OutsideFront	560605	female
C_ALT3	EngineCmpt.	562477	male	L59	OutsidefrontRH	562623	male
C_ALT3	EngineCmpt.	562479	female	L59A	OutsideFrontRH	563366	male
C_Mo9	Evap_Cmpt	561577	male	L59B	OutsideFrontRH	562623	male
C_Mo9	Evap_Cmpt	561605	female	L60	OutsideFrontLH	562623	male
C_Se51	FJB	563589	male	L60A	OutsideFrontLH	563366	male
C_Se51	FJB	563590	female	L60B	OutsideFrontLH	562623	male
CCust	RJB	562477	male	L61	OutsideFrontRH	562601	male
CCust	RJB	562479	female	L62	OutsideFrontLH	562601	male
CF167	RH_Console	562350	male	L63	FrontSideRH	562155	male
CF167	RH_Console	563764	female	L64	OutsideFrontRH	562155	male
CInt1	FJB	563227	male	L65	FrontSideLH	562155	male
CInt1	FJB	563614	female	L66	OutsideFrontLH	562155	male
CInt2	FJB	563226	male	L67	3rdLuggCmpt.	562155	male
CInt2	FJB	563613	female	L68	3rdLuggCmpt.	562155	male
CSo1	SlideOutPanel	562581	male	L69	EvapCmpt.	562155	male
CSo1	SlideOutPanel	562583	female	L70	EvapCmpt.	562155	male
CSo2	SlideOutPanel	561643	male	L71A	RearVehicleLH	562601	male
CSo2	SlideOutPanel	561641	female	L72	Rear_VehicleLH	562155	male
CSo5	SlideOutPanel	561847	male	L73A	RearVehicleRH	562601	male
CSo5	SlideOutPanel	561862	female	L74	RearVehicleRH	562155	male
CSo7	SlideOutPanel	562581	male	L75	RearVehicleLH	562155	male
CSo7	SlideOutPanel	562583	female	L76	RearVehicleRH	562155	male
CT_In	Rear_Vehicle	563582	male	L77A	RearVehicleRH	562601	male
CT_In	Rear_Vehicle	563583	female	L78A	RearVehicleRH	562601	male
CT_Out	Rear_Vehicle	560478	female	L79A	RearVehicleLH	562601	male
D3.1	EngineDoor	560082	female	L80A	RearVehicleLH	562601	male
D3.2	EngineDoor	560082	female	L81.A	DPFDoor	562835	female
EI	EngineCmpt.	563739	male	L81.B	DFPDoor	562834	male
L1A	EngineCmpt.	562848	male	L82A	EngineDoor	562348	female
L10	Dash	561247	male	L83A	EngineDoor	562348	female
L16.A	FrontRoof	562615	female	L84.	RrRoof	562486	female
L16.B	FrontRoof	562615	female	L85.	RrRoof	562486	female
L17.A	FrontRoof	562615	female	L86.	RrRoof	562486	female
L17.B	FrontRoof	562615	female	L87.	RrRoof	562486	female

CONNECTORS LIST

No	Location	Part #	Gender	No	Location	Part #	Gender
L88.	RrRoof	562486	female	L207.A	WCL_System	561699	female
L89.	RrRoof	562486	female	L207.B	WCL_System	561701	female
L90.	RrRoof	562486	female	L207.C	WCL_System	561701	female
L91A	RearVehiculeLH	562601	male	L207.D	WCL_System	561699	female
L92A	RearVehicleRH	562601	male	L207.E	WCL_System	561701	female
L93.A	RearOutsideLH	563069	female	L207.F	WCL_System	561699	female
L93.B	RearOutsideLH	563069	female	L207.G	WCL_System	561699	female
L94.A	RearOutsideRH	563069	female	L207.H	WCL_System	560926	female
L94.B	RearOutsideRH	563069	female	L207.I	WCL_System	560926	female
L95	Outside_Front_LH	562902	female	L212.A		563589	male
L96	Outside_Front_RH	562902	female	L213.A		563589	male
L97.A	Outside_Front_LH	563069	female	L214.A		563589	male
L97.B	Outside_Front_LH	563069	female	L282	Preheater_Cmpt	561690	male
L98.A	EntraceDoor	563069	female	L285.A	Rear_Vehicle	562835	female
L98.B	EntraceDoor	563069	female	L285.B	Rear_Vehicle	562834	male
L120	DriverSeat	562237	female	L286.A	Rear_Vehicle	562835	female
L173	EngineCmpt.	563590	female	L286.B	Rear_Vehicle	562834	male
L174A	EngineCmpt.	563590	female	L298A	EngineCmpt.	563590	female
L176	3rd_Lugg_Cmpt	561247	male	L304	OutsideLuggDoorLH	562155	male
L177	3rd_Lugg_Cmpt	561247	male	L305	OutsideLuggDoorRH	562155	male
L178	4thLuggCmpt.	561247	male	L306	Radiator_Door	562155	male
L179	4thLuggCmpt.	561247	male	L307	Radiator_Door	562155	male
L180	2nd_Lugg_Cmpt	561247	male	L309	RJB	561247	male
L181	2nd_Lugg_Cmpt	561247	male	L350A.A	RearAxleCmpt.	564552	male
L182	1st_Lugg_Cmpt	561247	male	L350A.B	RearAxleCmpt.	563340	male
L183	1st_Lugg_Cmpt	561247	male	L350A.C	RearAxleCmpt.	562251	male
L184	ServiceCmpt.	561247	male	Mo3	Dash	561667	female
L185.A	Dash	561539	male	Mo4	Dash	564161	male
L185.B	Dash	561539	male	Mo7	Cond_Cmpt	560159	female
L186.A	Dash	561539	male	Mo8	Cond_Cmpt	560159	female
L186.B	Dash	561539	male	Mo11	Cond_Cmpt	568089	male
L187	Engine_Cmpt	561690	male	Mo12	Engine_Cmpt	561690	male
L193.A	Dash	560488	female	Mo15.	FrCeling	563517	female
L193.B	Dash	560488	female	Mo16.	FrCeling	563517	female
L194.A	Dash	560488	female	Mo17	RH_Console	563626	male
L194.B	Dash	560488	female	Mo19	Fr_Service_Door	562474	male
L195.A	Dash	560488	female	Mo20	Fr_Service_Door	562474	male
L195.B	Dash	560488	female	Mo22	RH_Console	561186	male
L199	EngineCmpt.	562848	male	Mo24	RH_Console	562348	female
L203	RH_Console	561690	male	Mo25	RH_Console	562348	female
L204	WCL_Upper_Door	562803	male	Mo26	EntraceDoor	564161	male
L205	EvapCmpt.	562485	male	Mo27	Cond_Cmpt	560159	female
L206	WCL_Upper_Door	562803	male	Mo28	Cond_Cmpt	560159	female

CONNECTORS LIST

No	Location	Part #	Gender	No	Location	Part #	Gender
Mo29	RJB	563590	female	R38	FJB	564496	male
Mo30	1stLuggCmpt.LH	564161	male	R40	FJB	564496	male
Mo31	1stLuggCmpt.RH	564161	male	R47	WCL_System	564496	male
Mo32	2ndLuggCmpt.LH	564161	male	R167	RH_Console	564496	male
Mo33	2ndLuggCmpt.RH	564161	male	Res37A		563590	female
Mo34	3rdLuggCmpt.LH	564161	male	Res37B		563590	female
Mo35	3rdLuggCmpt.RH	564161	male	Res3	ParcelRack	563590	female
Mo36	CompressorDoor	564161	male	Res4	RH_Console	563590	female
Mo37	4thLuggCmpt.RH	564161	male	Res6	FJB	563590	female
Mo38	4thLuggCmpt.LH	564161	male	Res7	Dashboard	563590	female
Mo40	1stLuggCmpt.LH	561477	female	Res15	Engine_Cmpt	561782	male
Mo41	2ndLuggCmpt.LH	561477	female	Res16	ParcelRack	563590	female
Mo42	3rdLuggCmpt.LH	561477	female	Res17	ParcelRack	563590	female
Mo43	3rdLuggCmpt.LH	561477	female	Res19	FJB	563590	female
Mo50	FrontAxleCmpt.	561690	male	Res20	FJB	563590	female
Mo54	Service_Cmpt	562474	male	Res31	UreaCmpt.	562350	male
Mo55	EntraceDoor	563626	male	Res32	UreaCmpt.	563764	female
Mo65	EngineCmpt.	568089	male	Res53.A	CondensorCmpt.	563590	female
Mo67	EngineCmpt.	568089	male	Res99	Dash	563590	female
Mo68	EngineCmpt.	568089	male	RSO1_1	SlideOutPanel	564496	male
Mo69	EngineCmpt.	568089	male	RSO1_2	SlideOutPanel	564496	male
Mo70	EngineCmpt.	568089	male	RSO2_1	SlideOutPanel	564496	male
Mo71	EngineCmpt.	568089	male	RSO2_2	SlideOutPanel	564496	male
Mo72	EngineCmpt.	568089	male	Se2A	Service_Cmpt	561566	female
Mo73	EngineCmpt.	568089	male	Se11.A	Cond_Cmpt	560082	female
MoSO1	FrontSlideOut	562350	male	Se11.B	Cond_Cmpt	560082	female
MoSO2	RearSlideOut	562350	male	Se11.C	Cond_Cmpt	560082	female
PC1	CantrackCable	562650	male	Se13	Engine_Cmpt	563764	female
PC1	CantrackCable	562649	female	Se14..A	Driver_Area	561782	male
R1.A	RJB	562486	female	Se14..B	Driver_Area	561781	female
R3	RJB	563409	male	Se15.A	EntraceDoor	560488	female
R6	Dash	564496	male	Se15.B	EntraceDoor	560488	female
R6A	Dash	564496	male	Se15.C	EntraceDoor	560488	female
R12	Evap_Cmpt	563409	male	Se16.A	EntraceDoor	562651	female
R21	FJB	560525	male	Se16.B	EntraceDoor	562651	female
R23A	FJB	564496	male	Se17.A	EntraceDoor	562291	female
R27	Dash	564496	male	Se17.B	EntraceDoor	562291	female
R29	RJB	563409	male	Se17.C	EntraceDoor	562291	female
R30	FJB	564496	male	Se19_P	Service_Cmpt	563677	male
R31	FJB	564496	male	Se19_S	Service_Cmpt	563677	male
R35	RJB	564210	male	Se20.	Front_Axle_Cmpt	562426	male
R36	Dash	564496	male	Se21	Dash	561248	female
R37	Dash	564496	male	Se23	EngineCmpt.	563159	female

CONNECTORS LIST

No	Location	Part #	Gender	No	Location	Part #	Gender
Se23A	EngineCmpt.	563159	female	So17	Service_Cmpt	562848	male
Se24	EngineCmpt.	563758	female	So21	Front_Axle_Cmpt	564046	female
Se24A	EngineCmpt.	563758	female	So22	Front_Axle_Cmpt	564046	female
Se25	EvapCmpt.	561248	female	So23	Rear_Axle_Cmpt	564046	female
Se30	EngineCmpt.	562877	female	So24	Rear_Axle_Cmpt	564046	female
Se31	EngineCmpt.	562877	female	So27	RearAxleCmpt.	564045	female
Se32	Rear_Axle_Cmpt	562426	male	So28	ServiceCmpt.	641385	male
Se33	Rear_Axle_Cmpt	562856	male	So29	ServiceCmpt.	641385	male
Se34	Rear_Axle_Cmpt	562427	male	So30	ServiceCmpt.	641385	male
Se35	Rear_Axle_Cmpt	562426	male	So31	ServiceCmpt.	641385	male
Se36	Rear_Axle_Cmpt	562427	male	So32	ServiceCmpt.	641385	male
Se37	Front_Axle_LH	641132	female	So36	EngineCmpt.	561690	male
Se38	Front_Axle_RH	641132	female	So50	RearAxleCmpt.	564046	female
Se39	Rear_Axle_LH	641132	female	So52	FrontAxleCmpt.	564045	female
Se40	Rear_Axle_LH	641132	female	spBar4	EngineCmpt.	564135	male
Se45	ServiceCmpt.	563409	male	spBar5	EngineCmpt.	564135	male
Se46	RearAxleCmpt.	562348	female	spBar6	EngineCmpt.	564135	male
Se51	DriverSeat	563589	male	spBar7	CondCmpt.	564135	male
Se53	Service_Cmpt	563159	female	spBar11	EngineCmpt.	564135	male
Se54	Service_Cmpt	563159	female	spBar12	EngineCmpt.	564135	male
Se55	Service_Cmpt	563159	female	spBar13	EngineCmpt.	564135	male
Se56	WCLcompt.	562884	female	spBar14	EngineCmpt.	564135	male
Se57	PneumaticPanel	563159	female	spBar15	EngineCmpt.	564135	male
Se60	Service_Cmpt	563409	male	spBar16	EngineCmpt.	564135	male
Se62	WCL_system	561690	male	spBar19	CondCmpt.	564135	male
Se63	RearAxleCmpt.	641132	female	spBar20	CondCmpt.	564135	male
Se64	RearAxleCmpt.	641132	female	spBar21	CondCmpt.	564135	male
Se65	Dash	564042	female	spBar22	EngineCmpt.	564135	male
Se66	FrontAxleCmpt.	564039	female	spBar23	EngineCmpt.	564135	male
Se67	ServiceCmpt.	563159	female	spBar24	EngineCmpt.	564135	male
Se69	ServiceCmpt.	563159	female	Sw1.C258	Driver_Area	561188	female
Se89	EngineCmpt	563764	female	Sw1.C259	Driver_Area	561186	male
Se94	WCL_system	562877	female	Sw2	Dash	562763	male
Se100	WCL_Upper_Door	562479	female	Sw3	Dash	562763	male
SESO1	SlideOutPanel	563159	female	Sw4	Dash	562763	male
SESO2_SESO3	Frontslideout	562479	female	Sw6	Dash	562763	male
SESO5_SESO6	Rearslideout	562479	female	Sw14	Dash	562763	male
So3	RHConsole	641385	male	Sw16	Dash	562763	male
So7	Service_Cmpt	561566	female	Sw17	Dash	562763	male
So8	ServiceCmpt.	641385	male	Sw18A	LH_Console	562763	male
So9	EngineCmpt.	560016	female	Sw20	Dashboard	562763	male
So11	Cond_Cmpt	561566	female	Sw24	Dash	562763	male
So13	Evap_Cmpt	563204	female	Sw24A	Dash	562763	male

CONNECTORS LIST

No	Location	Part #	Gender	No	Location	Part #	Gender
Sw34	Dash	562763	male	Sw107.D	LHConsole	561457	female
SW34A	Dash	562763	male	Sw107.E	LHConsole	561457	female
SW34B	Dash	562763	male	Sw107.F	LHConsole	561457	female
Sw35	LHConsole	562763	male	Sw107.G	LHConsole	561457	female
Sw38	LH_Console	562763	male	Sw107.H	LHConsole	561457	female
Sw40	LH_Console	561690	male	Sw107.J	LHConsole	561457	female
Sw41	LH_Console	562749	male	Sw107.K	LHConsole	561457	female
Sw42	WCL_System	561636	female	Sw108	LHConsole	562763	male
Sw44.A	ServiceCmpt.	562403	female	Sw122	ServiceCmpt.	562763	male
Sw45.A	3rd_Lugg_Cmpt	562403	female	Sw123	Dash	562763	male
Sw45.B	3rdLuggCmpt.	562403	female	Sw137	Dash	562763	male
Sw46.A	3rd_Lugg_Cmpt	562403	female	Sw152	Driver_Area	562471	male
Sw46.B	3rdLuggCmpt.	562403	female	Sw156	LH_Console	562763	male
Sw46A.A	3rd_RH_Lugg_Cmpt	562403	female	Sw157	Dash	562763	male
Sw46A.B	3rd_RH_Lugg_Cmpt	562403	female	Sw158	Dash	562763	male
Sw47.A	4thLuggCmpt.	562403	female	Sw161	Dash	562763	male
Sw47.B	4thLuggCmpt.	562403	female	Sw165	RH_Console	562763	male
Sw48.A	4thLuggCmpt.	562403	female	Sw165A	RH_Console	562763	male
Sw48.B	4thLuggCmpt.	562403	female	Sw166	RH_Console	562763	male
Sw49.A	2nd_Lugg_Cmpt	562403	female	Sw167	RH_Console	562763	male
Sw49.B	2ndLuggCmpt.	562403	female	SwSo1	FrontSlideOut	561552	female
Sw50.A	2nd_Lugg_Cmpt	562403	female	SwSo2	RearSlideOut	561552	female
Sw51.A	1st_Lugg_Cmpt	562403	female	sym645_1190.J1	Dash	562780	male
Sw52.A	1st_Lugg_Cmpt	562403	female	sym645_1190.J2	Dash	562842	male
Sw58.A	EngineCmpt.	563135	male	sym645_1190.J3	Dash	562464	male
Sw59	EngineCmpt.	563135	male	sym645_1190.J4	Dash	562465	male
Sw63A	LHConsole	562763	male	sym645_1190.J5	Dash	563071	male
Sw64.A	ServiceCmpt.	560815	female	sym647_1190	Dash	562763	male
Sw64.B	Ssp	560815	female	sym659_1210	Engine_Cmpt	561690	male
Sw82	RJB	563135	male	tab0ff	FJB	560096	N/A
Sw83.A	Dash	560082	female	TBat1	RJB	561696	N/A
Sw83.B	Dash	560815	female	TBat3	RJB	561696	N/A
Sw83.C	Dash	560082	female	TBat5	RJB	561696	N/A
Sw83.D	Dash	560815	female	TBat9	RJB	560895	N/A
Sw85	LH_Console	562749	male	TBat10	RJB	560895	N/A
Sw99	Dash	562763	male	TBat11	RJB	560895	N/A
Sw102	Dash	562763	male	TBat12	RJB	560895	N/A
Sw103A	LHConsole	562763	male	TBat13	RJB	560039	N/A
Sw104	Dash	562763	male	TBat15	RJB	565164	N/A
Sw104B	APlan	562763	male	TBat18	RJB	560895	N/A
Sw107.A	LHConsole	561457	female	TBat19	RJB	560894	N/A
Sw107.B	LHConsole	561457	female	TBat20	RJB	560891	N/A
Sw107.C	LHConsole	561457	female	TBat21	RJB	560891	N/A

CONNECTORS LIST

No	Location	Part #	Gender	No	Location	Part #	Gender
TBat22	RJB	560891	N/A	Term47	RJB	561560	N/A
TBat23	RJB	560891	N/A	Term50	RJB	561626	N/A
TBat24	RJB	560895	N/A	Term54	RJB	564516	N/A
TBat25	RJBMasterRelay	560895	N/A	Term64	Evap_Cmpt	564220	N/A
TBat35	RJB	560083	N/A	Term106	RJB	{part_no564189}	N/A
TBat39	RJB	560895	N/A	Term107	RJB	{part_no564189}	N/A
TBat40	RJB	564166	N/A	Term116	Engine_Cmpt	563538	N/A
term57		562101	N/A	Term117	Engine_Cmpt	563538	N/A
Term00A	FJB	560928	N/A	Term126	RJB(RelayR3)	563746	N/A
Term0A.	FJBGndStud	560083	N/A	Term127	RJB(RelayR3)	563749	N/A
Term0A1	FJBGndStud	561964	N/A	Term131	RJB(RelayR3)	563746	N/A
Term00A1	FJB	560928	N/A	Term132	FJBGndStud	560895	N/A
Term0Cond1	EvapCmpt.ChassisGndStud	561560	N/A	Term135	Engine_Cmpt	564093	N/A
Term0Cond2	EvapCmpt.ChassisGndStud	561246	N/A	Term141	Engine_Cmpt	565166	N/A
Term0EV1.	EvapCmpt.ChassisGndStud	564220	N/A	Term149.	UreaCmpt.	561964	N/A
Term00F	RJB	560086	N/A	Term149A.	UreaCmpt.	561964	N/A
Term0F.	FJBGndStud	560083	N/A	Term176	DriverSeat	560082	N/A
Term00F1	FJB	563354	N/A	Term617	Driver_Area	560082	N/A
Term00F2	FJB	563354	N/A	Term618	Fr_LH_P_Rack		N/A
Term00F3	FJB	560928	N/A	Term619	Fr_LH_P_Rack	563623	N/A
Term00F4	FJB	560096	N/A	Term628	Fr_LH_P_Rack	563622	N/A
Term00F5	FJB	560086	N/A	Term629	Fr_LH_P_Rack	564005	N/A
Term00FH	FJB	560928	N/A	Term646	Fr_LH_P_Rack	563622	N/A
Term0FH.	FJBGndStud	560083	N/A	Term647	Fr_LH_P_Rack	564005	N/A
Term00FH1	FJB	560086	N/A	Term648	Fr_LH_P_Rack	563622	N/A
Term0FH1.	FJBGndStud	560083	N/A	Term649	Fr_LH_P_Rack	563622	N/A
Term00FH2	FJB	563354	N/A	Term654	Fr_LH_P_Rack	563623	N/A
Term00R1	RJB	560086	N/A	Term_Alt_Gnd_EXTR	Engine_Cmpt	564115	N/A
Term0R1.	RJBChassisGndStud	561246	N/A	Term_Alt_Gnd_EXTR1	FJBGndStud	561696	N/A
Term00R2	RJB	560086	N/A	Term_Alt_Gnd_UL	Engine_Cmpt	560027	N/A
Term00R3	RJB	563354	N/A	Term_Alt_Gnd_UL1	FJBGndStud	564116	N/A
Term00R4	RJB	563354	N/A	Term_Alt_UR	Engine_Cmpt	568125	N/A
Term00R5	RJB	563354	N/A	Term_AltUR_Bat	Engine_Cmpt	568125	N/A
Term00R6	RJB	560086	N/A	Term_CB1	RJBBreakersPanel	564025	N/A
Term4	RJB(RelayR3)	563329	N/A	Term_CB2	RJB	564024	N/A
Term5	RJBBreakersPanel	561696	N/A	Term_CB2A	RJBBreakersPanel	561560	N/A
Term7	RJB	561696	N/A	Term_CB3	RJBBreakersPanel	564025	N/A
Term12ECU	RJB	560926	N/A	Term_CB5	RJBBreakersPanel	564025	N/A
Term16	RH_Console	560082	N/A	Term_CB6	RJB	564024	N/A
Term20	FJBGndStud	561696	N/A	Term_CB6A	RJB_Breakers_panel	561560	N/A
Term36	FJBGndStud	560895	N/A	Term_CB7	RJBBreakersPanel	561560	N/A
Term37	FJBGndStud	560894	N/A	Term_CB8	RJBBreakersPanel	564025	N/A
Term46	Evap_Cmpt	564220	N/A	Term_CB9A	RJB_Breakers_panel	561246	N/A

CONNECTORS LIST

No	Location	Part #	Gender				
Term_CB10	RJBBreakersPanel	564026	N/A				
Term_sp00A	RH_Console	563623	N/A				
Term_spC71_19		563622	N/A				
TermAFSS.	Luggage_Cmpt	560083	N/A				
TermAltLL	Engine_Cmpt	565166	N/A				
TermNeg	Engine_Cmpt	560086	N/A				
TermPos	Engine_Cmpt	560086	N/A				
TermR12-3	Evap_Cmpt	560103	N/A				
TermR12-5	Evap_Cmpt	561788	N/A				
TermR21-A	FJB	560076	N/A				
TermR21-B	FJB	560076	N/A				
TermStar4	RJBBreakersPanel	560106	N/A				
TermStart1	Engine_Cmpt	560103	N/A				
TermStart2	Engine_Cmpt	560103	N/A				
TermStart3	Engine_Cmpt	560103	N/A				
TermStpG1	FJB	560082	N/A				
TGND_TR	EvapCmpt.ChassisGndStud	560083	N/A				
TGNDF1	FJB	561458	N/A				
TGNDR3	RJB	561458	N/A				
TGNDR4	RJB	561458	N/A				
VECF1	FJB	563186	male				
VECF2	FJB	563183	male				
VECF3	FJB	563185	male				
VECF4	FJB	563182	male				
VECF9	FJB	563448	male				
VECF10	FJB	563181	male				
VECF11	FJB	563184	male				
VECF12	FJB	563187	male				
VECR1	RJB	563186	male				
VECR2	RJB	563183	male				
VECR3	RJB	563185	male				
VECR4	RJB	563182	male				
VECR9	RJB	563448	male				
VECR10	RJB	563181	male				
VECR11	RJB	563184	male				
VECR12	RJB	563187	male				
VECT2	Rear_Vehicle	563716	male				
VECT3	RearVehicle	563718	male				
VECT4	RearVehicle	563714	male				
Y80	Engine_Cmpt	563789	male				
Y81	Cond_Cmpt	563793	male				

Diodes list

No	Location	Part no	Function	Page
D1	FJB	561740	Accessories Diode	3.2_Ign_Start 3 B
D2	FJB	561740	Diode Driver Liq. Sol.	18.1_Defroster 2 D
D4	RH Console	561740	Suppressor Diode Lower Wiper 2nd Spd	34.1_wiper_washer 4 D
D5	RH Console	561740	Suppressor Diode Lower Wiper 1st Spd	34.1_wiper_washer 4 D
D6	RJB	561740	Suppressor Diode Master relay	3.1_Main_Disti 1 B
D11	Evap_Cmpt	561740	Diode Pass. Liq. Sol	18.2_Full_AC 2 B
D12	FJB	565973	10amp	9.1_Horn 2 B
D13	FJB	561740	3amp	26.1_Front_Lighting 2 D
D14	FJB	561740	3amp	9.1_Horn 2 B
D29	RJB	561740	Suppressor Diode Unloader RH	18.2_Full_AC 3 D
D30	Evap_Cmpt	561740	Suppressor Diode Water Pump	18.2_Full_AC 2 C
D31	RJB	561740	Suppressor Diode A/C Clutch	18.2_Full_AC 3 D
D44	FJB	561740	Ignition Diode	3.2_Ign_Start 3 B
D51	Service Cmpt.	561740	LevelLow_Diode	32.1_Level_low 1 E
D66	Service Cmpt.	561740	Water pump flyback diode	18.3_Small_AC 4 B
D73	Evap_Cmpt	561740	Pre Heater	29.1_Entrance_door_Keyless 2 B
D75	Slide_Outs_Elect._Cmpt	561740	Park Brake Diode	20.1_SlideOut1 1 B
D79	Service Cmpt.	561740	LevelLow_Diode	32.1_Level_low 2 D
D81	Evap_Cmpt	561740	LevelLow_Diode	32.1_Level_low 1 D
D88	FJB	560931	Lugg. Lights Diode	25.1_Compt_Lighting
D89	FJB	560931	Lugg. Lights Diode	25.1_Compt_Lighting
DSO1_1	FR_LH_Slide_Out	563375	Slide out motor 1	20.1_SlideOut1 3 B
DSO1_2	FR_LH_Slide_Out	563375	Slide out motor 1	20.1_SlideOut1 3 B
DSO2_1	RR_LH_Slide_Out	563375	Slide out motor 2	20.2_SlideOut2 4 B
DSO2_2	RR_LH_Slide_Out	563375	Slide out motor 2	20.2_SlideOut2 4 B

DIODES LIST

No	Location	Part #	Function	Page					
D1	FJB	561740	AccessoriesDiode	3.2					
D2	FJB	561740	DrvLiqSol	18.1					
D4	RHConsole	561740	WiperSpd	34.1					
D5	RHConsole	561740	WiperSpd	34.1					
D6	RJB	561740	MasterRelayCoil	3.1					
D11	Evap_Cmpt	561740	Pass.Liq	18.2					
D12	FJB	565973	ElecHorn	9.1					
D13	FJB	561740	FrClearanceLgts	26.1					
D14	FJB	561740	FrClearanceLgts	9.1					
D29	RJB	561740	UnloaderRH	18.2					
D30	Evap_Cmpt	561740	SuppressorDiodeWaterPump	18.2					
D31	RJB	561740	A/CClutch	18.2					
D44	FJB	561740	IgnitionDiode	3.2					
D51	ServiceCmpt.	561740	LevelLow_Diode	32.1					
D66	ServiceCmpt.	561740	WatPump	18.3					
D73	Evap_Cmpt	561740	EntDoor	29.1					
D75	Slide_Outs_Elect._Cmpt	561740	ParkBrakeDiode	20.1					
D79	ServiceCmpt.	561740	LevelLow_Diode	32.1					
D81	Evap_Cmpt	561740	LevelLow_Diode	32.1					
D87	Evap_Cmpt	561740	1N5408	19.1					
D88	RH_Console	560931	LuggageCompt.Lights	25.1					
D89	RH_Console	560931	LuggageCompt.Lights	25.1					
DSO1_1	FR_LH_Slide_Out	563375	Slideoutmotor1	20.1					
DSO1_2	FR_LH_Slide_Out	563375	Slideoutmotor1	20.1					
DSO2_1	RR_LH_Slide_Out	563375	Slideoutmotor2	20.2					
DSO2_2	RR_LH_Slide_Out	563375	Slideoutmotor2	20.2					

DIODES LIST

No	Location	Part #	Function	Page					
D1	FJB	561740	AccessoriesDiode	3.2					
D2	FJB	561740	DrvLiqSol	18.1					
D4	RHConsole	561740	WiperSpd	34.1					
D5	RHConsole	561740	WiperSpd	34.1					
D11	Evap_Cmpt	561740	Pass.Liq	18.2					
D12	FJB	565973	ElecHorn	9.1					
D13	FJB	561740	FrClearanceLgts	26.1					
D14	FJB	561740	FrClearanceLgts	9.1					
D29	RJB	561740	UnloaderRH	18.2					
D30	Evap_Cmpt	561740	SuppressorDiodeWaterPump	18.2					
D31	RJB	561740	A/CClutch	18.2					
D44	FJB	561740	IgnitionDiode	3.2					
D51	ServiceCmpt.	561740	LevelLow_Diode	32.1					
D66	ServiceCmpt.	561740	WatPump	18.3					
D73	Evap_Cmpt	561740	EntDoor	29.1					
D75	Slide_Outs_Elect._Cmpt	561740	ParkBrakeDiode	20.1					
D79	ServiceCmpt.	561740	LevelLow_Diode	32.1					
D81	Evap_Cmpt	561740	LevelLow_Diode	32.1					
D82	FJB	560931	Driver'sLights	19.1SP1					
D83	Dashboard	560931	Driver'sLights	19.1					
D88	FJB	560931	LuggageCompt.Lights	25.1SP1					
D89	FJB	560931	LuggageCompt.Lights	25.1SP1					
DSO1_1	FR_LH_Slide_Out	563375	Slideoutmotor1	20.1					
DSO1_2	FR_LH_Slide_Out	563375	Slideoutmotor1	20.1					
DSO2_1	RR_LH_Slide_Out	563375	Slideoutmotor2	20.2					
DSO2_2	RR_LH_Slide_Out	563375	Slideoutmotor2	20.2					

DIODES LIST

No	Location	Part #	Function	Page					
D1	FJB	561740	AccessoriesDiode	3.2					
D2	FJB	561740	DrvLiqSol	18.1					
D3	Eng_Cmpt	564383	Trailer	26.4					
D4	RHConsole	561740	WiperSpd	34.1					
D5	RHConsole	561740	WiperSpd	34.1					
D11	Evap_Cmpt	561740	Pass.Liq	18.2					
D12	FJB	565973	ElecHorn	9.1					
D13	FJB	561740	FrClearanceLgts	26.1					
D14	FJB	561740	FrClearanceLgts	9.1					
D29	RJB	561740	UnloaderRH	18.2					
D30	Evap_Cmpt	561740	SuppressorDiodeWaterPump	18.2					
D31	RJB	561740	A/CClutch	18.2					
D44	FJB	561740	IgnitionDiode	3.2					
D51	ServiceCmpt.	561740	LevelLow_Diode	32.1					
D66	ServiceCmpt.	561740	WatPump	18.3					
D73	Evap_Cmpt	561740	EntDoor	29.1					
D75	Slide_Outs_Elect._Cmpt	561740	ParkBrakeDiode	20.1					
D79	ServiceCmpt.	561740	LevelLow_Diode	32.1					
D81	Evap_Cmpt	561740	LevelLow_Diode	32.1					
D82	FJB	560931	Driver'sLights	19.1SP1					
D83	Dashboard	560931	Driver'sLights	19.1					
D88	FJB	560931	LuggageCompt.Lights	25.1SP1					
D89	FJB	560931	LuggageCompt.Lights	25.1SP1					
DSO1_1	FR_LH_Slide_Out	563375	Slideoutmotor1	20.1					
DSO1_2	FR_LH_Slide_Out	563375	Slideoutmotor1	20.1					
DSO2_1	RR_LH_Slide_Out	563375	Slideoutmotor2	20.2					
DSO2_2	RR_LH_Slide_Out	563375	Slideoutmotor2	20.2					

DIODES LIST

No	Location	Part #	Function	Page					
D82	FJB	560931	Driver's Lights	19,1SP1					
D83	Dashboard	560931	Driver's Lights	19,1SP2					
D88	FJB	560931	LuggageCompt.Lights	25,1SP1					
D89	FJB	560931	LuggageCompt.Lights	25,1SP1					

RELAYS LIST

No	Location	Part #	Function	Page					
R167	RHConsole	563332	Luggage Compt. Lights	25,1SP1					

DIODES LIST

No	Location	Part #	Function	Page					
D1	FJB	561740	AccessoriesDiode	3.2					
D2	FJB	561740	DrvLiqSol	18.1					
D3	Eng_Cmpt	564383	Trailer	26.4					
D4	RHConsole	561740	WiperSpd	34.1					
D5	RHConsole	561740	WiperSpd	34.1					
D6	RHConsole	561740	WiperPwr	34.1					
D11	Evap_Cmpt	561740	Pass.Liq	18.2					
D12	FJB	565973	ElecHorn	9.1					
D13	FJB	561740	FrClearanceLgts	26.1					
D14	FJB	561740	FrClearanceLgts	9.1					
D29	RJB	561740	UnloaderRH	18.2					
D30	Evap_Cmpt	561740	SuppressorDiodeWaterPump	18.2					
D31	RJB	561740	A/CClutch	18.2					
D44	FJB	561740	IgnitionDiode	3.2					
D51	ServiceCmpt.	561740	LevelLow_Diode	32.1					
D66	ServiceCmpt.	561740	WatPump	18.3					
D73	Evap_Cmpt	561740	EntDoor	29.1					
D75	Slide_Outs_Elect._Cmpt	561740	ParkBrakeDiode	20.1					
D79	ServiceCmpt.	561740	LevelLow_Diode	32.1					
D81	Evap_Cmpt	561740	LevelLow_Diode	32.1					
D82	FJB	560931	Driver'sLights	19.1SP1					
D83	Dashboard	560931	Driver'sLights	19.1					
D88	FJB	560931	LuggageCompt.Lights	25.1SP1					
D89	FJB	560931	LuggageCompt.Lights	25.1SP1					
DSO1_1	FR_LH_Slide_Out	563375	Slideoutmotor1	20.1					
DSO1_2	FR_LH_Slide_Out	563375	Slideoutmotor1	20.1					
DSO2_1	RR_LH_Slide_Out	563375	Slideoutmotor2	20.2					
DSO2_2	RR_LH_Slide_Out	563375	Slideoutmotor2	20.2					

DIODES LIST

No	Location	Part #	Function	Page					
D1	FJB	561740	AccessoriesDiode	3.2					
D2	FJB	561740	DrvLiqSol	18.1					
D3	Eng._Cmpt	DiodeTrailer	*opt*	26.4					
D4	RHConsole	561740	WiperSpd	34.1					
D5	RHConsole	561740	WiperSpd	34.1					
D6	RHConsole	561740	WiperSpd	34.1					
D11	Evap_Cmpt	561740	Pass.Liq	18.2					
D12	FJB	565973	ElecHorn	9.1					
D13	FJB	561740	FrClearanceLgts	26.1					
D14	FJB	561740	FrClearanceLgts	9.1					
D29	RJB	561740	UnloaderRH	18.2					
D30	Evap_Cmpt	561740	SuppressorDiodeWaterPump	18.2					
D31	RJB	561740	A/CClutch	18.2					
D44	FJB	561740	IgnitionDiode	3.2					
D51	ServiceCmpt.	561740	LevelLow_Diode	32.1					
D66	ServiceCmpt.	561740	WatPump	18.3					
D73	Evap_Cmpt	561740	EntDoor	29.1					
D75	Slide_Outs_Elect._Cmpt	561740	ParkBrakeDiode	20.1					
D79	ServiceCmpt.	561740	LevelLow_Diode	32.1					
D81	Evap_Cmpt	561740	LevelLow_Diode	32.1					
D82	FJB	560931	Driver'sLights	19.1SP1					
D83	Dashboard	560931	Driver'sLights	19.1					
D88	FJB	560931	LuggageCompt.Lights	25.1SP1					
D89	FJB	560931	LuggageCompt.Lights	25.1SP1					
D622		561740	1N5408	60.3					
D623		561740	1N5408	60.3					
D82A		560931	*opt*	19.1					
D83A		560931	*opt*	19.1					
DSO1_1	FR_LH_Slide_Out	563375	Slideoutmotor1	20.1					
DSO1_2	FR_LH_Slide_Out	563375	Slideoutmotor1	20.1					
DSO2_1	RR_LH_Slide_Out	563375	Slideoutmotor2	20.2					
DSO2_2	RR_LH_Slide_Out	563375	Slideoutmotor2	20.2					

Resistors list

No	Location	Part no	Function	Page
Res3	RJB	563593	CAN_Nertwork	6.1_MuxNetwork 0 B
Res4	FJB	563593	CAN_Nertwork	6.1_MuxNetwork 3 C
Res6	FJB	563593	DBus_Network	6.2_Network 3 E
Res7	FJB	563593	J939 Network	6.2_Network 4 B
Res9	Dash	564164	25 Ohms	19.1_Driver_Lights 1 D
Res11	RJB	563205	620R/2W	18.3_Small_AC 3 D
Res15	Engine_Cmpt	563587	End of line device	38.1_Fire_Supp 4 C
Res19	Dash	563593	End of line	29.1_Entrance_door_Keyless 0 D
Res20	Dash	563593	End of line	29.1_Entrance_door_Keyless 1 E
Res31	Urea tank	041123	Heat element	14.2_Urea 3 B
Res32	Urea tank	041123	Heat element	14.2_Urea 3 B
Res53	FJB	563593	End of line	6.2_Network 4 C

RESISTORS LIST

No	Location	Part #	Function	Page					
Res3	RJB	563593	CAN_Nertwork	6.1					
Res4	FJB	563593	CAN_Nertwork	6.1					
Res6	RJB	563593	DBus_Network	6.2					
Res7	Dash	563593	J1939Network	6.2					
Res9	Dash	564164	Driver'sLights	19.1					
Res11	RJB	563205	FanCond	18.3					
Res14	Evap_Cmpt	564164	FANSCond	18.2					
Res15	Engine_Cmpt	563587	Flamedetection	38.1					
Res19	Dashboard	563593	KeylessCtrlCANNetwork	29.1					
Res20	Dashboard	563593	KeylessCtrlCANNetwork	29.1					
Res23	3rd_RH_Lugg_Cmpt	563205	WCL	36.1					
Res31	Ureatank	41123	HeatedelementforUreatank	14.2					
Res32	Ureatank	41123	HeatedelementforUreatank	14.2					
Res53	Dash	563593	J2284Network	6.2					

RESISTORS LIST

No	Location	Part #	Function	Page					
Res3	RJB	563593	CAN_Nertwork	6.1					
Res4	FJB	563593	CAN_Nertwork	6.1					
Res6	RJB	563593	DBus_Network	6.2					
Res7	Dash	563593	J1939Network	6.2					
Res9	Dash	564164	Driver'sLights	19.1					
Res11	RJB	563205	FanCond	18.3					
Res14	Evap_Cmpt	564164	FANSCond	18.2					
Res15	Engine_Cmpt	563587	Flamedetection	38.1					
Res19	Dashboard	563593	KeylessCtrlCANNetwork	29.1					
Res20	Dashboard	563593	KeylessCtrlCANNetwork	29.1					
Res31	Ureatank	41123	HeatedelementforUreatank	14.2					
Res32	Ureatank	41123	HeatedelementforUreatank	14.2					
Res53	Dash	563593	J2284Network	6.2					
Res99	Dashboard	563593	CANNetwork	42.4					

RESISTORS LIST

No	Location	Part #	Function	Page					
Res3	ParcelRack	563593	CAN_Nertwork	6.1					
Res4	RH_Console	563593	CAN_Nertwork	6.1					
Res6	RJB	563593	DBus_Network	6.2					
Res7	Dash	563593	J1939Network	6.2					
Res11	RJB	563205	FanCond	18.3					
Res14	Evap_Cmpt	564164	FANSCond	18.2					
Res15	Engine_Cmpt	563587	Flamedetection	38.1					
Res16	ParcelRack	563593	*opt*	6.1					
Res17	ParcelRack	563593	*opt*	6.1					
Res19	Dashboard	563593	KeylessCtrlCANNetwork	29.1					
Res20	Dashboard	563593	KeylessCtrlCANNetwork	29.1					
Res31	Ureatank	41123	HeatedelementforUreatank	14.2					
Res32	Ureatank	41123	HeatedelementforUreatank	14.2					
Res53	Dash	563593	J2284Network	6.2					
Res99	Dashboard	563593	CANNetwork	42.4					
Res37A	*opt*	*563590	*opt*	60.3					
Res37B	*opt*	*563590	*opt*	60.3					

Relays list

No	Location	Part no	Function	Page
R1	RJB	562364	Master Relay	3.1_Main_Disti 2 A
R3	RJB	563348	12v Ign & Acc Relay	3.1_Main_Disti 2 B
R6	RJB	563269	Unlock	29.1_Entrance_door_Keyless 4 C
R7	RJB	563269	Lock	29.1_Entrance_door_Keyless 4 C
R12	RJB	563551	Evaporator Relay	18.2_Full_AC 4 C
R21	FJB_VECF	563269	Emergency cutout relay	4.1_Dist_12V_FJB 1 B
R22	FJB_VECF	563269	Ecu Ign	4.1_Dist_12V_FJB 1 C
R23	FJB_VECF	563269	Shutdown	4.1_Dist_12V_FJB 1 D
R24	FJB_VECF	563269	12V_Ign	4.1_Dist_12V_FJB 1 D
R25	FJB_VECF	563269	24V Ign	4.2_Dist_24V_FJB 1 C
R26	Evap_Cmpt	563332	Pre-Heat Relay	18.2_Full_AC 3 B
R27	RH Console	563332	Lower wiper motor	34.1_wiper_washer 3 C
R29	RJB	563348	Preheater_Volvo	14.1_Engine_Ecu 2 E
R30	RJB	563269	12v ENG RUN	4.1_Dist_12V_FJB 4 A
R31	RJB	563269	12v IGN	4.1_Dist_12V_FJB 4 B
R34	RJB	564218	12v Rr Engine Ecu	3.2_Ign_Start 3 C
R36	RJB	563269	Fire_Extinguisher	9.1_Horn 1 B
R37	RJB	563269	Electric horn	9.1_Horn 2 C
R38	RJB	563269	Cigar lighter relay	30.2_Outlet_12v 1 B
R52	RJB	563270	Clearance lights & side markers	26.4_Trailer 2 B
R53	RJB	563270	Flashers left side	26.4_Trailer 2 B
R54	RJB	563270	Brake lights	26.4_Trailer 2 C
R55	RJB	563270	Flashers right side	26.4_Trailer 2 C
R56	RJB	563270	Tail & licence lights	26.4_Trailer 2 D
R167	FJB	563332	Luggage compt Lights	25.1_Compt_Lighting 0 C
R_Starter	RJB	564095	Starter Relay Ctr	3.2_Ign_Start 3 D

RELAYS LIST

No	Location	Part #	Function	Page					
R1	RJB	562364	MasterR1	3.1					
R3	RJB	563348	12vIgn/Acc	3.1					
R6	RJB	563269	EntrDoorUL	29.1					
R7	RJB	563269	EntrDoorLo	29.1					
R12	RJB	563551	EvaporatorRelay	18.2					
R21	FJB_VECF	563269	EmerCutout	4.1					
R22	FJB_VECF	563269	EcuIgn	4.1					
R23	FJB_VECF	563269	Shutdown	4.1					
R24	FJB_VECF	563269	12V_Ign	4.1					
R25	FJB_VECF	563269	24VIgn	4.2					
R27	RHConsole	563332	Wipers	34.1					
R29	RJB	563348	Preheater	14.1					
R30	RJB	563269	12vENGRUN	4.1					
R31	RJB	563269	12vIGN	4.1					
R34	RJB	564218	12vEngEcu	3.2					
R36	RJB	563269	Fire_Extin	9.1					
R37	RJB	563269	Electhorn	9.1					
R38	RJB	563269	Ciga/Outle	30.2					
R47	WCLPump	563332	WCLDoorOpen(option)	36.1					
R51	VECT	563270	Backuplights	26.4					
R52	VECT	563270	Taillights&runninglights	26.4					
R53	VECT	563270	Flashersleftside	26.4					
R54	VECT	563270	Brakelights	26.4					
R55	VECT	563270	Flashersrightside	26.4					
R167	RH_Console	563332	LuggageCompt.Lights	25.1					
R_Starter	RJB	564095	StartCtrl	3.2					
RSO1_1	Slide_Outs_Elect._Cmpt	563332	Slide_Out	20.1					
RSO1_2	Slide_Outs_Elect._Cmpt	563332	Slide_Out	20.1					
RSO2_1	Slide_Outs_Elect._Cmpt	563332	Slide_Out	20.2					
RSO2_2	Slide_Outs_Elect._Cmpt	563332	Slide_Out	20.2					

RELAYS LIST

No	Location	Part #	Function	Page					
R1	RJB	562364	MasterR1	3.1					
R3	RJB	563348	12vIgn/Acc	3.1					
R6	RJB	563269	EntrDoorUL	29.1					
R7	RJB	563269	EntrDoorLo	29.1					
R12	RJB	563551	EvaporatorRelay	18.2					
R21	FJB	560493	24VRelayLatching	3.2					
R22	FJB_VECF	563269	EcuIgn	4.1					
R23	FJB_VECF	563269	Shutdown	4.1					
R24	FJB_VECF	563269	12V_Ign	4.1					
R25	FJB_VECF	563269	24VIgn	4.2					
R27	RHConsole	563332	Wipers	34.1					
R29	RJB	563348	Preheater	14.1					
R30	RJB	563269	12vENGRUN	4.1					
R31	RJB	563269	12vIGN	4.1					
R34	RJB	564218	12vEngEcu	3.2					
R36	RJB	563269	Fire_Extin	9.1					
R37	RJB	563269	Electhorn	9.1					
R38	RJB	563269	Ciga/Outle	30.2					
R47	WCLPump	563332	WCLDoorOpen(option)	36.1					
R51	VECT	563270	Backuplights	26.4					
R52	VECT	563270	Taillights&runninglights	26.4					
R53	VECT	563270	Flashersleftside	26.4					
R54	VECT	563270	Brakelights	26.4					
R55	VECT	563270	Flashersrightside	26.4					
R_Starter	RJB	564095	StartCtrl	3.2					
RSO1_1	Slide_Outs_Elect._Cmpt	563332	Slide_Out	20.1					
RSO1_2	Slide_Outs_Elect._Cmpt	563332	Slide_Out	20.1					
RSO2_1	Slide_Outs_Elect._Cmpt	563332	Slide_Out	20.2					
RSO2_2	Slide_Outs_Elect._Cmpt	563332	Slide_Out	20.2					

RELAYS LIST

No	Location	Part #	Function	Page					
R1	RJB	560843	MasterRelay	3.1					
R3	RJB	563348	12vIgn/Acc	3.1					
R6	RJB	563269	EntrDoorUL	29.1					
R12	RJB	563551	EvaporatorRelay	18.2					
R21	FJB	560493	24VRelayLatching	3.2					
R22	FJB_VECF	563269	EcuIgn	4.1					
R23	FJB_VECF	563269	Shutdown	4.1					
R24	FJB_VECF	563269	12V_Ign	4.1					
R25	FJB_VECF	563269	24VIgn	4.2					
R27	RHConsole	563332	Wipers	34.1					
R29	RJB	563348	Preheater	14.1					
R30	RJB	563269	12vENGRUN	4.1					
R31	RJB	563269	12vIGN	4.1					
R34	RJB	564218	12vEngEcu	3.2					
R35	RJB	564218	24vEngEcu	3.2					
R36	RJB	563269	Fire_Extin	9.1					
R37	RJB	563269	Electhorn	9.1					
R38	RJB	563269	Ciga/Outle	30.2					
R40	FJB_VECF	563269	EntranceDoorWindowRelay	30.1					
R47	WCLPump	563332	WCLDoorOpen(option)	36.1					
R51	VECT	563270	Backuplights	26.4					
R52	VECT	563270	Taillights&runninglights	26.4					
R53	VECT	563270	Flashersleftside	26.4					
R54	VECT	563270	Brakelights	26.4					
R55	VECT	563270	Flashersrightside	26.4					
R167	RH_Console	563332	LuggageCompt.Lights	25.1SP1					
R_Starter	RJB	564095	StartCtrl	3.2					
R23A	FJB_VECF	563269	24VShutdown	4.1					
R6A	RJB	563269	EntrDoorUL	29.1					
RSO1_1	Slide_Outs_Elect._Cmpt	563332	Slide_Out	20.1					
RSO1_2	Slide_Outs_Elect._Cmpt	563332	Slide_Out	20.1					
RSO2_1	Slide_Outs_Elect._Cmpt	563332	Slide_Out	20.2					
RSO2_2	Slide_Outs_Elect._Cmpt	563332	Slide_Out	20.2					

RELAYS LIST

No	Location	Part #	Function	Page					
R1		560843	MasterRelay	3.1					
R3	RJB	563348	12vIgn/Acc	3.1					
R6	RJB	563269	EntrDoorUL	29.1					
R12	RJB	563551	EvaporatorRelay	18.2					
R21	FJB	560493	24VRelayLatching	3.2					
R22	FJB_VECF	563269	EcuIgn	4.1					
R23	FJB_VECF	563269	Shutdown	4.1					
R24	FJB_VECF	563269	12V_Ign	4.1					
R25	FJB_VECF	563269	24VIgn	4.2					
R27	RHConsole	563332	Wipers	34.1					
R29	RJB	563348	Preheater	14.1					
R30	RJB	563269	12vENGRUN	4.1					
R31	RJB	563269	12vIGN	4.1					
R34	RJB	564218	12vEngEcu	3.2					
R35	RJB	564218	24vEngEcu	3.2					
R36	RJB	563269	Fire_Extin	9.1					
R37	RJB	563269	Electhorn	9.1					
R38	RJB	563269	Ciga/Outle	30.2					
R40	FJB_VECF	563269	EntranceDoorWindowRelay	30.1					
R47	WCLPump	563332	WCLDoorOpen(option)	36.1					
R51	VECT	563270	Backuplights	26.4					
R52	VECT	563270	Taillights&runninglights	26.4					
R53	VECT	563270	Flashersleftside	26.4					
R54	VECT	563270	Brakelights	26.4					
R55	VECT	563270	Flashersrightside	26.4					
R167	RH_Console	563332	LuggageCompt.Lights	25.1SP1					
R622		563332	LHTurnRelay	60.3					
R623		563332	RHTurnRelay	60.3					
R624		563337	eMirrors	60.3					
R_Starter	RJB	564095	StartCtrl	3.2					
R23A		563269	24VShutdown	4.1					
R6A	RJB	563269	EntrDoorUL	29.1					
RSO1_1	Slide_Outs_Elect._Cmpt	563332	Slide_Out	20.1					
RSO1_2	Slide_Outs_Elect._Cmpt	563332	Slide_Out	20.1					
RSO2_1	Slide_Outs_Elect._Cmpt	563332	Slide_Out	20.2					
RSO2_2	Slide_Outs_Elect._Cmpt	563332	Slide_Out	20.2					

Fuses list

No	Location	Part no	Rating	Page
F4	Fuse Box FJB	563280	5 amp	4.2_Dist_24V_FJB 2 B
F10	Fuse Box FJB	563280	5 amp	4.1_Dist_12V_FJB 1 A
F11	Fuse Box FJB	563282	20 amp	4.1_Dist_12V_FJB 1 A
F12	Fuse Box FJB	563280	15 amp	4.1_Dist_12V_FJB 1 A
F13	Fuse Box FJB	563284	15 amp	4.1_Dist_12V_FJB 1 A
F14	Fuse Box FJB	563280	5 amp	4.1_Dist_12V_FJB 1 A
F15	Fuse Box FJB	563280	5 amp	4.1_Dist_12V_FJB 1 A
F16	Fuse Box FJB	563284	15 amp	4.1_Dist_12V_FJB 1 A
F17	Fuse Box FJB	53165	30 amp	4.1_Dist_12V_FJB 1 A
F18	Fuse Box FJB	563165	30 amp	4.1_Dist_12V_FJB 1 A
F19	Fuse Box FJB	563165	30 amp	4.1_Dist_12V_FJB 1 B
F20	Fuse Box FJB	563280	5 amp	4.1_Dist_12V_FJB 1 B
F21	Fuse Box FJB	563280	30 amp	4.1_Dist_12V_FJB 1 B
F22	Fuse Box FJB	563280	5 amp	4.1_Dist_12V_FJB 1 B
F23	Fuse Box FJB	563165	30 amp	4.1_Dist_12V_FJB 1 B
F24	Fuse Box FJB	563284	15 amp	4.1_Dist_12V_FJB 1 B
F25	Fuse Box FJB	563283	15 amp	4.1_Dist_12V_FJB 1 B
F26	Fuse Box FJB	563283	15 amp	4.1_Dist_12V_FJB 1 B
F27	Fuse Box FJB	563165	30 amp	4.1_Dist_12V_FJB 1 B
F29	Fuse Box FJB	563283	10 amp	4.1_Dist_12V_FJB 1 D
F30	Fuse Box FJB	563283	5 amp	4.1_Dist_12V_FJB 1 C
F33	Fuse Box FJB	563280	5 amp	4.2_Dist_24V_FJB 2 B
F34	Fuse Box FJB	563280	5 amp	4.2_Dist_24V_FJB 2 B
F35	Fuse Box FJB	563280	5 amp	4.2_Dist_24V_FJB 2 A
F36	Fuse Box FJB	563279	5 amp	4.2_Dist_24V_FJB 2 A
F37	Fuse Box FJB	563280	5 amp	4.2_Dist_24V_FJB 2 A
F39	Fuse Box FJB	563284	15 amp	4.2_Dist_24V_FJB 2 B
F40	Fuse Box FJB	563284	15 amp	4.2_Dist_24V_FJB 2 B
F41	Fuse Box FJB	563280	5 amp	4.2_Dist_24V_FJB 2 B
F42	Fuse Box FJB	563283	10 amp	4.1_Dist_12V_FJB 1 D

Fuses list

No	Location	Part no	Rating	Page
F43	Fuse Box FJB	563282	20 amp	4.1_Dist_12V_FJB 1 D
F44	Fuse Box FJB	563165	30 amp	4.2_Dist_24V_FJB 2 B
F45	Fuse Box FJB	563165	30 amp	4.2_Dist_24V_FJB 2 B
F46	Fuse Box FJB	563165	5 amp	4.2_Dist_24V_FJB 2 B
F47	Fuse Box FJB	563280	5 amp	4.2_Dist_24V_FJB 2 C
F50	Fuse Box FJB	563280	30 amp	4.2_Dist_24V_FJB 2 C
F51	Fuse Box FJB	563280	5 amp	4.2_Dist_24V_FJB 2 C
F52	Fuse Box FJB	563279	5 amp	4.2_Dist_24V_FJB 2 C
F53	Fuse Box FJB	563283	10 amp	4.2_Dist_24V_FJB 2 D
F54	Fuse Box FJB	563153	15 amp	4.2_Dist_24V_FJB 2 D
F55	Fuse Box FJB	563004	10 amp	4.2_Dist_24V_FJB 2 D
F56	Fuse Box FJB	563004	15 amp	4.2_Dist_24V_FJB 2 D
F57	Fuse Box FJB	563004	10 amp	4.2_Dist_24V_FJB 2 D
F58	Fuse Box FJB	563004	15 amp	4.2_Dist_24V_FJB 2 D
F73	Fuse Box RJB	563283	20 amp	5.1_Dist_RJB 2 B
F90	Fuse Box RJB	563282	20 amp	5.1_Dist_RJB 1 A
F91	Fuse Box RJB	563282	20 amp	5.1_Dist_RJB 2 A
F95	Fuse Box FJB	563004	5 amp	4.2_Dist_24V_FJB 2 C
F96	Fuse Box RJB	563284	20 amp	5.1_Dist_RJB 1 C
F99	Fuse Box RJB	563165	30 amp	5.1_Dist_RJB 1 A
F100	Fuse Box RJB	563283	10 amp	5.1_Dist_RJB 2 A
F101	Fuse Box RJB	564520	300 amp	3.1_Main_Disti 3 A
F105	Fuse Box RJB	563282	20 amp	5.1_Dist_RJB 2 A
F106	Fuse Box RJB	563153	30 amp	5.1_Dist_RJB 1 A
F107	Fuse Box RJB	563153	30 amp	5.1_Dist_RJB 2 A
F108	Fuse Box RJB	563280	5 amp	5.1_Dist_RJB 1 B
F109	Fuse Box RJB	563282	5 amp	5.1_Dist_RJB 2 B
F110	Fuse Box RJB	563283	10 amp	5.1_Dist_RJB 1 B
F112	Fuse Box RJB	563165	30 amp	5.1_Dist_RJB 1 B
F113	Fuse Box RJB	563284	10 amp	5.1_Dist_RJB 2 B

Fuses list

No	Location	Part no	Rating	Page
F114	Fuse Box RJB	563284	15 amp	5.1_Dist_RJB 1 B
F115	Fuse Box RJB	563284	10 amp	5.1_Dist_RJB 2 B
F116	Fuse Box RJB	563284	15 amp	5.1_Dist_RJB 1 B
F117	Fuse Box RJB	563283	10 amp	5.1_Dist_RJB 2 B
F118	Fuse Box RJB	563284	15 amp	5.1_Dist_RJB 1 B
F119	Fuse Box RJB	563284	10 amp	5.1_Dist_RJB 2 B
F120	Fuse Box RJB	563284	15 amp	5.1_Dist_RJB 1 B
F121	Fuse Box RJB	563284	15 amp	5.1_Dist_RJB 2 B
F122	Fuse Box RJB	563153	10 amp	5.1_Dist_RJB 2 C
F123	Fuse Box RJB	563284	25 amp	5.1_Dist_RJB 1 C
F124	Fuse Box RJB	563284	25 amp	5.1_Dist_RJB 2 C
F126	Fuse Box RJB	563284	5 amp	5.1_Dist_RJB 2 C
F127	Fuse Box RJB	563284	15 amp	5.1_Dist_RJB 1 C
F129	Fuse Box RJB	563284	15 amp	5.1_Dist_RJB 1 C
F130	Fuse Box RJB	563284	15 amp	5.1_Dist_RJB 2 C
F131	Fuse Box RJB	563284	5 amp	5.1_Dist_RJB 1 C
F132	Fuse Box RJB	563280	5 amp	5.1_Dist_RJB 1 C
F133	Fuse Box RJB	563165	30 amp	5.1_Dist_RJB 2 D
F134	Fuse Box RJB	563165	30 amp	5.1_Dist_RJB 1 D
F135	Fuse Box RJB	563165	30 amp	5.1_Dist_RJB 2 D
F136	Fuse Box RJB	563165	30 amp	5.1_Dist_RJB 1 D
F137	Fuse Box RJB	563280	5 amp	5.1_Dist_RJB 2 D
F138	Fuse Box RJB	563280	5 amp	5.1_Dist_RJB 1 D
F139	Fuse Box RJB	563279	10 amp	5.1_Dist_RJB 2 D
F140	Fuse Box RJB	563283	10 amp	5.1_Dist_RJB 1 D
F141	Fuse Box RJB	563153	15 amp	5.1_Dist_RJB 2 D
F142	Fuse Box RJB	563284	15 amp	5.1_Dist_RJB 1 D
F143	Fuse Box RJB	563153	15 amp	5.1_Dist_RJB 2 D
F144	Fuse Box RJB	563284	15 amp	5.1_Dist_RJB 1 D
F145	Fuse Box RJB	563153	15 amp	5.1_Dist_RJB 2 D

Fuses list

No	Location	Part no	Rating	Page
F146	Fuse Box RJB	563153	10 amp	5.1_Dist_RJB 1 D
F147	Fuse Box RJB	563284	15 amp	5.1_Dist_RJB 2 D
F148	Fuse Box RJB	563284	30 amp	5.1_Dist_RJB 2 E
F149	Fuse Box RJB	563284	15 amp	5.1_Dist_RJB 1 E
F150	Fuse Box RJB	563284	10 amp	5.1_Dist_RJB 2 E
F151	Fuse Box RJB	563284	15 amp	5.1_Dist_RJB 1 E
F152	Fuse Box RJB	563283	10 amp	5.1_Dist_RJB 2 E
F199	RJB	562597	300 amp	13.1_FanDriveElectric 0 B
F209	RJB	562597	150 amp	14.1_Engine_Ecu 3 E
F301	VECT	563284	15 amp	26.4_Trailer 2 E
F302	VECT	563284	15 amp	26.4_Trailer 2 B
F303	VECT	563284	15 amp	26.4_Trailer 2 B
F304	VECT	563284	15 amp	26.4_Trailer 2 C
F305	VECT	563284	15 amp	26.4_Trailer 2 C
F306	VECT	563284	15 amp	26.4_Trailer 2 D
F307	VECT	563284	15 amp	26.4_Trailer 2 A

FUSES LIST

No	Location	Part #	Function	Rating	Page
F4	FuseBoxFJB	563280	TGW	5amp	4.2
F10	FuseBoxFJB	563280	OBD&Clust	5amp	4.1
F11	FuseBoxFJB	563282	Horn	20amp	4.1
F12	FuseBoxFJB	563280	FrontDoor	15amp	4.1
F13	FuseBoxFJB	563284	12VDCust	15amp	4.1
F14	FuseBoxFJB	563165	A43Pwr	30amp	4.1
F15	FuseBoxFJB	563280	PwrKeylessCtrl	5amp	4.1
F16	FuseBoxFJB	563284	12EngRunCu	15amp	4.1
F17	FuseBoxFJB	53165	Spare	30amp	4.1
F18	FuseBoxFJB	563165	A45Pwr	30amp	4.1
F19	FuseBoxFJB	563165	A46Pwr	30amp	4.1
F20	FuseBoxFJB	563280	A55/A15Pwr	5amp	4.1
F21	FuseBoxFJB	563280	A48Pwr	30amp	4.1
F22	FuseBoxFJB	563280	Spare	5amp	4.1
F23	FuseBoxFJB	563165	ESP	30amp	4.1
F24	FuseBoxFJB	563284	12VICust	15amp	4.1
F25	FuseBoxFJB	563283	12VOutlet	15amp	4.1
F26	FuseBoxFJB	563283	Spare	15amp	4.1
F27	FuseBoxFJB	563165	DriverSeat	30amp	4.1
F29	FuseBoxFJB	563283	Shutdown	10amp	4.1
F30	FuseBoxFJB	563283	OBDCon	5amp	4.1
F33	FuseBoxFJB	563280	Spare	5amp	4.2
F34	FuseBoxFJB	563280	A42Pwr	5amp	4.2
F35	FuseBoxFJB	563280	MCMPwr	5amp	4.2
F36	FuseBoxFJB	563279	StartSw	5amp	4.2
F37	FuseBoxFJB	563280	Haz/ExtDoorSw	5amp	4.2
F39	FuseBoxFJB	563284	24VDCust	15amp	4.2
F40	FuseBoxFJB	563284	FireSupp	15amp	4.2
F41	FuseBoxFJB	563280	A41Pwr	5amp	4.2
F42	FuseBoxFJB	563283	Spare	10amp	4.1
F43	FuseBoxFJB	563282	Spare	20amp	4.1
F44	FuseBoxFJB	563165	A44Pwr	30amp	4.2
F45	FuseBoxFJB	563165	A47Pwr	30amp	4.2
F46	FuseBoxFJB	563165	A56Pwr	5amp	4.2
F47	FuseBoxFJB	563280	MCM	5amp	4.2
F50	FuseBoxFJB	563280	Defrost	30amp	4.2
F51	FuseBoxFJB	563280	PwrR24	5amp	4.2
F52	FuseBoxFJB	563279	Spare	5amp	4.2
F53	FuseBoxFJB	563283	LevelLow	10amp	4.2
F54	FuseBoxFJB	563153	Spare	15Amp	4.2
F55	FuseBoxFJB	563004	Spare	10amp	4.2
F56	FuseBoxFJB	563004	Spare	15amp	4.2
F57	FuseBoxFJB	563004	Spare	10amp	4.2

FUSES LIST

No	Location	Part #	Function	Rating	Page
F58	FuseBoxFJB	563004	Spare	15amp	4.2
F73	FuseBoxRJB	563283	EngECU	20amp	5.1
F90	FuseBoxRJB	563282	UreaSys	20amp	5.1
F91	FuseBoxRJB	563282	EngECU	20amp	5.1
F95	FuseBoxFJB	563004	TGW	5amp	4.2
F96	FuseBoxRJB	563284	ACM24VD	20amp	5.1
F99	FuseBoxRJB	563165	EngECU	30amp	5.1
F100	FuseBoxRJB	563283	EngECU	10amp	5.1
F101	RJB	564520	Fansdriveelectric	300amp	3.1
F105	FuseBoxRJB	563282	Spare	20amp	5.1
F106	FuseBoxRJB	563153	A50Pwr	30amp	5.1
F107	FuseBoxRJB	563153	A51Pwr	30amp	5.1
F108	FuseBoxRJB	563280	OBDConPwr	5amp	5.1
F109	FuseBoxRJB	563282	RrProxSw	5amp	5.1
F110	FuseBoxRJB	563283	TransPwr	10amp	5.1
F112	FuseBoxRJB	563165	Spare	30amp	5.1
F113	FuseBoxRJB	563284	Spare	10amp	5.1
F114	FuseBoxRJB	563284	Spare	15amp	5.1
F115	FuseBoxRJB	563283	Spare	20amp	5.1
F116	FuseBoxRJB	563284	Spare	15amp	5.1
F117	FuseBoxRJB	563283	Spare	20amp	5.1
F118	FuseBoxRJB	563284	Spare	15amp	5.1
F119	FuseBoxRJB	563153	Spare	30amp	5.1
F120	FuseBoxRJB	563284	Spare	15amp	5.1
F121	FuseBoxRJB	563284	12WUPCust	15amp	5.1
F122	FuseBoxRJB	563153	Spare	10amp	5.1
F123	FuseBoxRJB	563284	Spare	25amp	5.1
F124	FuseBoxRJB	563284	Spare	25amp	5.1
F126	FuseBoxRJB	563284	R29/So11	5amp	5.1
F127	FuseBoxRJB	563284	Spare	15amp	5.1
F129	FuseBoxRJB	563284	Spare	15amp	5.1
F130	FuseBoxRJB	563284	WinAjar	15amp	5.1
F131	FuseBoxRJB	563284	24VDCust	5amp	5.1
F132	FuseBoxRJB	563280	A57Pwr	5amp	5.1
F133	FuseBoxRJB	563165	A49Pwr	30amp	5.1
F134	FuseBoxRJB	563165	A52Pwr	30amp	5.1
F135	FuseBoxRJB	563165	A54Pwr	30amp	5.1
F136	FuseBoxRJB	563165	A58/A59Pwr	30amp	5.1
F137	FuseBoxRJB	563280	Equalizer	5amp	5.1
F138	FuseBoxRJB	563280	Spare	5amp	5.1
F139	FuseBoxRJB	563279	Altern	10amp	5.1
F140	FuseBoxRJB	563283	Spare	10amp	5.1
F141	FuseBoxRJB	563153	Mo7Cond	15amp	5.1

FUSES LIST

No	Location	Part #	Function	Rating	Page
F142	FuseBoxRJB	563284	Mo8Cond	15amp	5.1
F143	FuseBoxRJB	563153	Mo27Cond	15amp	5.1
F144	FuseBoxRJB	563284	Mo28Cond	15amp	5.1
F145	FuseBoxRJB	563153	Spare	15amp	5.1
F146	FuseBoxRJB	563153	Spare	10amp	5.1
F147	FuseBoxRJB	563284	24WupCust	15amp	5.1
F148	FuseBoxRJB	563284	Spare	30amp	5.1
F149	FuseBoxRJB	563284	Spare	15amp	5.1
F150	FuseBoxRJB	563284	Spare	10amp	5.1
F151	FuseBoxRJB	563284	Spare	15amp	5.1
F152	FuseBoxRJB	563283	Spare	10amp	5.1
F167	RH_Console	563283	LuggageCompt.Lights	10amp	25.1
F199	RJB	562597	RADFans	300Amp	13.1
F209	RJB	562597	PreHeat	150A	14.1
F302	VECT	563282	Trailerbrakelights	20amp	26.4
F303	VECT	563282	Trailertailandrunninglights	20amp	26.4
F304	VECT	563282	TrailerBackuplights	20amp	26.4

FUSES LIST

No	Location	Part #	Function	Rating	Page
F4	FuseBoxFJB	563280	Spare	5amp	4.2
F10	FuseBoxFJB	563280	OBD&Clust	5amp	4.1
F11	FuseBoxFJB	563282	Horn	20amp	4.1
F12	FuseBoxFJB	563280	FrontDoor	15amp	4.1
F13	FuseBoxFJB	563284	12VDCust	15amp	4.1
F14	FuseBoxFJB	563165	A43Pwr	30amp	4.1
F15	FuseBoxFJB	563280	PwrKeylessCtrl	5amp	4.1
F16	FuseBoxFJB	563284	12EngRunCu	15amp	4.1
F17	FuseBoxFJB	53165	Spare	30amp	4.1
F18	FuseBoxFJB	563165	A45Pwr	30amp	4.1
F19	FuseBoxFJB	563165	A46Pwr	30amp	4.1
F20	FuseBoxFJB	563280	A55/A15Pwr	5amp	4.1
F21	FuseBoxFJB	563280	A48Pwr	30amp	4.1
F22	FuseBoxFJB	563280	ELD	5amp	4.1
F23	FuseBoxFJB	563165	ESP	30amp	4.1
F24	FuseBoxFJB	563284	12VICust	15amp	4.1
F25	FuseBoxFJB	563283	12VOutlet	15amp	4.1
F26	FuseBoxFJB	563283	Spare	15amp	4.1
F27	FuseBoxFJB	563165	DriverSeat	30amp	4.1
F29	FuseBoxFJB	563283	Shutdown	10amp	4.1
F30	FuseBoxFJB	563283	OBDCon	5amp	4.1
F33	FuseBoxFJB	563280	TGW	5amp	4.1
F34	FuseBoxFJB	563280	Spare	15amp	4.1
F35	FuseBoxFJB	563280	MCMPwr	5amp	4.2
F36	FuseBoxFJB	563279	StartSw	5amp	4.2
F37	FuseBoxFJB	563280	Haz/ExtDoorSw	5amp	4.2
F39	FuseBoxFJB	563284	24VDCust	15amp	4.2
F40	FuseBoxFJB	563284	FireSupp	15amp	4.2
F41	FuseBoxFJB	563280	A41Pwr	5amp	4.2
F42	FuseBoxFJB	563283	Spare	10amp	4.1
F43	FuseBoxFJB	563282	Spare	20amp	4.1
F44	FuseBoxFJB	563165	A44Pwr	30amp	4.2
F45	FuseBoxFJB	563165	A47Pwr	30amp	4.2
F46	FuseBoxFJB	563165	A56Pwr	5amp	4.2
F47	FuseBoxFJB	563280	MCM	5amp	4.2
F50	FuseBoxFJB	563280	Defrost	30amp	4.2
F51	FuseBoxFJB	563280	A42Pwr	5amp	4.2
F52	FuseBoxFJB	563279	FMSGW	5amp	4.2
F53	FuseBoxFJB	563283	LevelLow	10amp	4.2
F54	FuseBoxFJB	563153	Spare	15Amp	4.2
F55	FuseBoxFJB	563004	Spare	10amp	4.2
F56	FuseBoxFJB	563004	Spare	15amp	4.2
F57	FuseBoxFJB	563004	Spare	10amp	4.2

FUSES LIST

No	Location	Part #	Function	Rating	Page
F58	FuseBoxFJB	563004	Spare	15amp	4.2
F73	FuseBoxRJB	563283	EngECU	20amp	5.1
F90	FuseBoxRJB	563282	UreaSys	20amp	5.1
F91	FuseBoxRJB	563282	EngECU	20amp	5.1
F95	FuseBoxFJB	563004	FMSGW	5amp	4.2
F96	FuseBoxRJB	563284	ACM24VD	20amp	5.1
F99	FuseBoxRJB	563165	EngECU	30amp	5.1
F100	FuseBoxRJB	563283	EngECU	10amp	5.1
F101	RJB	564520	Fansdriveelectric	300amp	3.1
F105	FuseBoxRJB	563282	Spare	20amp	5.1
F106	FuseBoxRJB	563153	A50Pwr	30amp	5.1
F107	FuseBoxRJB	563153	A51Pwr	30amp	5.1
F108	FuseBoxRJB	563280	OBDConPwr	5amp	5.1
F109	FuseBoxRJB	563282	RrProxSw	5amp	5.1
F110	FuseBoxRJB	563283	TransPwr	10amp	5.1
F112	FuseBoxRJB	563165	Spare	30amp	5.1
F113	FuseBoxRJB	563284	Spare	10amp	5.1
F114	FuseBoxRJB	563284	Spare	15amp	5.1
F115	FuseBoxRJB	563283	Spare	20amp	5.1
F116	FuseBoxRJB	563284	Spare	15amp	5.1
F118	FuseBoxRJB	563284	Spare	15amp	5.1
F120	FuseBoxRJB	563284	Spare	15amp	5.1
F121	FuseBoxRJB	563284	12WUPCust	15amp	5.1
F122	FuseBoxRJB	563153	Equalizer	10amp	5.1
F123	FuseBoxRJB	563284	Spare	25amp	5.1
F124	FuseBoxRJB	563284	Spare	25amp	5.1
F126	FuseBoxRJB	563284	R29/So11	5amp	5.1
F127	FuseBoxRJB	563284	Spare	15amp	5.1
F129	FuseBoxRJB	563284	Spare	15amp	5.1
F130	FuseBoxRJB	563284	WinAjar	15amp	5.1
F131	FuseBoxRJB	563284	24VDCust	5amp	5.1
F132	FuseBoxRJB	563280	A57Pwr	5amp	5.1
F133	FuseBoxRJB	563165	A49Pwr	30amp	5.1
F134	FuseBoxRJB	563165	A52Pwr	30amp	5.1
F135	FuseBoxRJB	563165	A54Pwr	30amp	5.1
F136	FuseBoxRJB	563165	A58/A59Pwr	30amp	5.1
F137	FuseBoxRJB	563280	SPARE	5amp	5.1
F138	FuseBoxRJB	563280	Spare	5amp	5.1
F139	FuseBoxRJB	563279	Altern	10amp	5.1
F140	FuseBoxRJB	563283	Spare	10amp	5.1
F141	FuseBoxRJB	563153	Mo7Cond	15amp	5.1
F142	FuseBoxRJB	563284	Mo8Cond	15amp	5.1
F143	FuseBoxRJB	563153	Mo27Cond	15amp	5.1

FUSES LIST

No	Location	Part #	Function	Rating	Page
F144	FuseBoxRJB	563284	Mo28Cond	15amp	5.1
F145	FuseBoxRJB	563153	Spare	15amp	5.1
F146	FuseBoxRJB	563153	Spare	10amp	5.1
F147	FuseBoxRJB	563284	24WupCust	15amp	5.1
F148	FuseBoxRJB	563284	Spare	30amp	5.1
F149	FuseBoxRJB	563284	Spare	15amp	5.1
F150	FuseBoxRJB	563284	Spare	10amp	5.1
F151	FuseBoxRJB	563284	Spare	15amp	5.1
F152	FuseBoxRJB	563283	Spare	10amp	5.1
F199	RJB	562597	RADFans	300Amp	13.1
F209	RJB	562597	PreHeat	150A	14.1
F302	VECT	563282	Trailerbrakelights	20amp	26.4
F303	VECT	563282	Trailertailandrunninglights	20amp	26.4
F304	VECT	563282	TrailerBackuplights	20amp	26.4

FUSES LIST

No	Location	Part #	Function	Rating	Page
F4	FuseBoxFJB	563280	Spare	5amp	4.2
F10	FuseBoxFJB	563280	OBD&Clust	5amp	4.1
F11	FuseBoxFJB	563282	Horn	20amp	4.1
F12	FuseBoxFJB	563280	FrontDoor	15amp	4.1
F13	FuseBoxFJB	563284	12VDCust	15amp	4.1
F14	FuseBoxFJB	563165	A43Pwr	30amp	4.1
F15	FuseBoxFJB	563280	PwrKeylessCtrl	5amp	4.1
F16	FuseBoxFJB	563284	12EngRunCu	15amp	4.1
F17	FuseBoxFJB	53165	Spare	30amp	4.1
F18	FuseBoxFJB	563165	A45Pwr	30amp	4.1
F19	FuseBoxFJB	563165	A46Pwr	30amp	4.1
F20	FuseBoxFJB	563280	A55/A15Pwr	5amp	4.1
F21	FuseBoxFJB	563280	A48Pwr	30amp	4.1
F22	FuseBoxFJB	563280	ELD	5amp	4.1
F23	FuseBoxFJB	563165	ESP	30amp	4.1
F24	FuseBoxFJB	563284	12VICust	15amp	4.1
F25	FuseBoxFJB	563283	12VOutlet	15amp	4.1
F26	FuseBoxFJB	563283	Spare	15amp	4.1
F27	FuseBoxFJB	563165	DriverSeat	30amp	4.1
F29	FuseBoxFJB	563283	Shutdown	10amp	4.1
F30	FuseBoxFJB	563283	OBDCon	5amp	4.1
F33	FuseBoxFJB	563280	TGW	5amp	4.1
F34	FuseBoxFJB	563280	Spare	15amp	4.1
F35	FuseBoxFJB	563280	MCMPwr	5amp	4.2
F36	FuseBoxFJB	563279	StartSw	5amp	4.2
F37	FuseBoxFJB	563280	Haz/ExtDoorSw	5amp	4.2
F39	FuseBoxFJB	563284	24VDCust	15amp	4.2
F40	FuseBoxFJB	563284	FireSupp	15amp	4.2
F41	FuseBoxFJB	563280	A41Pwr	5amp	4.2
F42	FuseBoxFJB	563283	Spare	10amp	4.1
F43	FuseBoxFJB	563282	Spare	20amp	4.1
F44	FuseBoxFJB	563165	A44Pwr	30amp	4.2
F45	FuseBoxFJB	563165	A47Pwr	30amp	4.2
F46	FuseBoxFJB	563165	A56Pwr	5amp	4.2
F47	FuseBoxFJB	563280	MCM	5amp	4.2
F50	FuseBoxFJB	563280	Defrost	30amp	4.2
F51	FuseBoxFJB	563280	A42Pwr	5amp	4.2
F52	FuseBoxFJB	563279	FMSGW	5amp	4.2
F53	FuseBoxFJB	563283	LevelLow	10amp	4.2
F54	FuseBoxFJB	563153	Spare	15Amp	4.2
F55	FuseBoxFJB	563283	Electronics Mirror	10amp	4.2
F56	FuseBoxFJB	563153	Spare	15amp	4.2
F57	FuseBoxFJB	563283	Spare	10amp	4.2

FUSES LIST

No	Location	Part #	Function	Rating	Page
F58	FuseBoxFJB	563004	Spare	15amp	4.2
F73	FuseBoxRJB	563283	EngECU	20amp	5.1
F90	FuseBoxRJB	563282	UreaSys	20amp	5.1
F91	FuseBoxRJB	563282	EngECU	20amp	5.1
F95	FuseBoxFJB	563004	FMSGW	5amp	4.2
F96	FuseBoxRJB	563284	ACM24VD	20amp	5.1
F99	FuseBoxRJB	563165	EngECU	30amp	5.1
F100	FuseBoxRJB	563283	EngECU	10amp	5.1
F101	RJB	564520	Fansdriveelectric	300amp	3.1
F105	FuseBoxRJB	563282	Spare	20amp	5.1
F106	FuseBoxRJB	563153	A50Pwr	30amp	5.1
F107	FuseBoxRJB	563153	A51Pwr	30amp	5.1
F108	FuseBoxRJB	563280	OBDConPwr	5amp	5.1
F109	FuseBoxRJB	563282	RrProxSw	5amp	5.1
F110	FuseBoxRJB	563283	TransPwr	10amp	5.1
F112	FuseBoxRJB	563165	Spare	30amp	5.1
F113	FuseBoxRJB	563284	Spare	10amp	5.1
F114	FuseBoxRJB	563284	Spare	15amp	5.1
F115	FuseBoxRJB	563283	Spare	20amp	5.1
F116	FuseBoxRJB	563284	Spare	15amp	5.1
F118	FuseBoxRJB	563284	Spare	15amp	5.1
F120	FuseBoxRJB	563284	Spare	15amp	5.1
F121	FuseBoxRJB	563284	12WUPCust	15amp	5.1
F122	FuseBoxRJB	563153	Equalizer	10amp	5.1
F123	FuseBoxRJB	563284	Spare	25amp	5.1
F124	FuseBoxRJB	563284	Spare	25amp	5.1
F126	FuseBoxRJB	563284	R29/So11	5amp	5.1
F127	FuseBoxRJB	563284	Spare	15amp	5.1
F129	FuseBoxRJB	563284	Spare	15amp	5.1
F130	FuseBoxRJB	563284	WinAjar	15amp	5.1
F131	FuseBoxRJB	563284	24VDCust	5amp	5.1
F132	FuseBoxRJB	563280	A57Pwr	5amp	5.1
F133	FuseBoxRJB	563165	A49Pwr	30amp	5.1
F134	FuseBoxRJB	563165	A52Pwr	30amp	5.1
F135	FuseBoxRJB	563165	A54Pwr	30amp	5.1
F136	FuseBoxRJB	563165	A58/A59Pwr	30amp	5.1
F137	FuseBoxRJB	563280	SPARE	5amp	5.1
F138	FuseBoxRJB	563280	Spare	5amp	5.1
F139	FuseBoxRJB	563279	Altern	10amp	5.1
F140	FuseBoxRJB	563283	Spare	10amp	5.1
F141	FuseBoxRJB	563153	Mo7Cond	15amp	5.1
F142	FuseBoxRJB	563284	Mo8Cond	15amp	5.1
F143	FuseBoxRJB	563153	Mo27Cond	15amp	5.1

FUSES LIST

No	Location	Part #	Function	Rating	Page
F144	FuseBoxRJB	563284	Mo28Cond	15amp	5.1
F145	FuseBoxRJB	563153	Spare	15amp	5.1
F146	FuseBoxRJB	563153	Spare	10amp	5.1
F147	FuseBoxRJB	563284	24WupCust	15amp	5.1
F148	FuseBoxRJB	563284	Spare	30amp	5.1
F149	FuseBoxRJB	563284	Spare	15amp	5.1
F150	FuseBoxRJB	563284	Spare	10amp	5.1
F151	FuseBoxRJB	563284	Spare	15amp	5.1
F152	FuseBoxRJB	563283	Spare	10amp	5.1
F199	RJB	562597	RADFans	300Amp	13.1
F209	RJB	562597	PreHeat	150A	14.1
F302	VECT	563282	Trailerbrakelights	20amp	26.4
F303	VECT	563282	Trailertailandrunninglights	20amp	26.4
F304	VECT	563282	TrailerBackuplights	20amp	26.4

FUSES LIST

No	Location	Part #	Function	Rating	Page
F167	RH Console	563283	Luggage Compt. Lights	10amp	25,1SP1

FUSES LIST

No	Location	Part #	Function	Rating	Page
F4	FuseBoxFJB	563280	Spare	5amp	4.2
F10	FuseBoxFJB	563280	OBD&Clust	5amp	4.1
F11	FuseBoxFJB	563282	Horn	20amp	4.1
F12	FuseBoxFJB	563280	FrontDoor	15amp	4.1
F13	FuseBoxFJB	563284	12VDCust	15amp	4.1
F14	FuseBoxFJB	563165	A43Pwr	30amp	4.1
F15	FuseBoxFJB	563280	PwrKeylessCtrl	5amp	4.1
F16	FuseBoxFJB	563284	12EngRunCu	15amp	4.1
F17	FuseBoxFJB	53165	Spare	30amp	4.1
F18	FuseBoxFJB	563165	A45Pwr	30amp	4.1
F19	FuseBoxFJB	563165	A46Pwr	30amp	4.1
F20	FuseBoxFJB	563280	A55/A15Pwr	5amp	4.1
F21	FuseBoxFJB	563280	A48Pwr	30amp	4.1
F22	FuseBoxFJB	563280	ELD	5amp	4.1
F23	FuseBoxFJB	563165	ESP	30amp	4.1
F24	FuseBoxFJB	563284	12VICust	15amp	4.1
F25	FuseBoxFJB	563283	12VOutlet	15amp	4.1
F26	FuseBoxFJB	563283	Spare	15amp	4.1
F27	FuseBoxFJB	563165	DriverSeat	30amp	4.1
F29	FuseBoxFJB	563283	Shutdown	10amp	4.1
F30	FuseBoxFJB	563283	OBDCon	5amp	4.1
F33	FuseBoxFJB	563280	TGW	5amp	4.1
F34	FuseBoxFJB	563280	Spare	15amp	4.1
F35	FuseBoxFJB	563280	MCMPwr	5amp	4.2
F36	FuseBoxFJB	563279	StartSw	5amp	4.2
F37	FuseBoxFJB	563280	Haz/ExtDoorSw	5amp	4.2
F39	FuseBoxFJB	563284	24VDCust	15amp	4.2
F40	FuseBoxFJB	563284	FireSupp	15amp	4.2
F41	FuseBoxFJB	563280	A41Pwr	5amp	4.2
F42	FuseBoxFJB	563283	Spare	10amp	4.1
F43	FuseBoxFJB	563282	Spare	20amp	4.1
F44	FuseBoxFJB	563165	A44Pwr	30amp	4.2
F45	FuseBoxFJB	563165	A47Pwr	30amp	4.2
F46	FuseBoxFJB	563165	A56Pwr	5amp	4.2
F47	FuseBoxFJB	563280	MCM	5amp	4.2
F50	FuseBoxFJB	563280	Defrost	30amp	4.2
F51	FuseBoxFJB	563280	A42Pwr	5amp	4.2
F52	FuseBoxFJB	563279	FMSGW	5amp	4.2
F53	FuseBoxFJB	563283	LevelLow	10amp	4.2
F54	FuseBoxFJB	563153	Spare	15Amp	4.2
F55	FuseBoxFJB	563283	Electronics Mirror	10amp	4.2
F56	FuseBoxFJB	563153	Spare	15amp	4.2
F57	FuseBoxFJB	563283	Spare	10amp	4.2

FUSES LIST

No	Location	Part #	Function	Rating	Page
F58	FuseBoxFJB	563004	Spare	15amp	4.2
F73	FuseBoxRJB	563283	EngECU	20amp	5.1
F90	FuseBoxRJB	563282	UreaSys	20amp	5.1
F91	FuseBoxRJB	563282	EngECU	20amp	5.1
F95	FuseBoxFJB	563004	FMSGW	5amp	4.2
F96	FuseBoxRJB	563284	ACM24VD	20amp	5.1
F99	FuseBoxRJB	563165	EngECU	30amp	5.1
F100	FuseBoxRJB	563283	EngECU	10amp	5.1
F101	RJB	564520	Fansdriveelectric	300amp	3.1
F105	FuseBoxRJB	563282	Spare	20amp	5.1
F106	FuseBoxRJB	563153	A50Pwr	30amp	5.1
F107	FuseBoxRJB	563153	A51Pwr	30amp	5.1
F108	FuseBoxRJB	563280	OBDConPwr	5amp	5.1
F109	FuseBoxRJB	563282	RrProxSw	5amp	5.1
F110	FuseBoxRJB	563283	TransPwr	10amp	5.1
F112	FuseBoxRJB	563165	Spare	30amp	5.1
F113	FuseBoxRJB	563284	Spare	10amp	5.1
F114	FuseBoxRJB	563284	Spare	15amp	5.1
F115	FuseBoxRJB	563283	Spare	20amp	5.1
F116	FuseBoxRJB	563284	Spare	15amp	5.1
F118	FuseBoxRJB	563284	Spare	15amp	5.1
F120	FuseBoxRJB	563284	Spare	15amp	5.1
F121	FuseBoxRJB	563284	12WUPCust	15amp	5.1
F122	FuseBoxRJB	563153	Equalizer	10amp	5.1
F123	FuseBoxRJB	563284	Spare	25amp	5.1
F124	FuseBoxRJB	563284	Spare	25amp	5.1
F126	FuseBoxRJB	563284	R29/So11	5amp	5.1
F127	FuseBoxRJB	563284	Spare	15amp	5.1
F129	FuseBoxRJB	563284	Spare	15amp	5.1
F130	FuseBoxRJB	563284	WinAjar	25amp	5.1
F131	FuseBoxRJB	563284	24VDCust	5amp	5.1
F132	FuseBoxRJB	563280	A57Pwr	5amp	5.1
F133	FuseBoxRJB	563165	A49Pwr	30amp	5.1
F134	FuseBoxRJB	563165	A52Pwr	30amp	5.1
F135	FuseBoxRJB	563165	A54Pwr	30amp	5.1
F136	FuseBoxRJB	563165	A58/A59Pwr	30amp	5.1
F137	FuseBoxRJB	563280	SPARE	5amp	5.1
F138	FuseBoxRJB	563280	Spare	5amp	5.1
F139	FuseBoxRJB	563279	Altern	10amp	5.1
F140	FuseBoxRJB	563283	Spare	10amp	5.1
F141	FuseBoxRJB	563153	Mo7Cond	25amp	5.1
F142	FuseBoxRJB	563284	Mo8Cond	25amp	5.1
F143	FuseBoxRJB	563153	Mo27Cond	25amp	5.1

FUSES LIST

No	Location	Part #	Function	Rating	Page
F144	FuseBoxRJB	563284	Mo28	25amp	5.1
F145	FuseBoxRJB	563153	Spare	25amp	5.1
F146	FuseBoxRJB	563153	Spare	10amp	5.1
F147	FuseBoxRJB	563284	24WupCust	15amp	5.1
F148	FuseBoxRJB	563284	Spare	30amp	5.1
F149	FuseBoxRJB	563284	UreaSystem	20amp	5.1
F150	FuseBoxRJB	563284	Spare	10amp	5.1
F151	FuseBoxRJB	563284	Spare	15amp	5.1
F152	FuseBoxRJB	563283	Spare	10amp	5.1
F167	RH_Console	563283	LuggageCompt.Lights	10amp	25.1SP1
F199	RJB	562597	RADFans	300Amp	13.1
F209	RJB	562597	PreHeat	150A	14.1
F302	VECT	563282	Trailerbrakelights	20amp	26.4
F303	VECT	563282	Trailertailandrunninglights	20amp	26.4
F304	VECT	563282	TrailerBackuplights	20amp	26.4

FUSES LIST

No	Location	Part #	Function	Rating	Page
F4	FuseBoxFJB	563280	Spare	5amp	4.2
F10	FuseBoxFJB	563280	OBD&Clust	5amp	4.1
F11	FuseBoxFJB	563282	Horn	20amp	4.1
F12	FuseBoxFJB	563280	FrontDoor	15amp	4.1
F13	FuseBoxFJB	563284	12VDCust	15amp	4.1
F14	FuseBoxFJB	563165	A43Pwr	30amp	4.1
F15	FuseBoxFJB	563280	PwrKeylessCtrl	5amp	4.1
F16	FuseBoxFJB	563284	12EngRunCu	15amp	4.1
F17	FuseBoxFJB	53165	Spare	30amp	4.1
F18	FuseBoxFJB	563165	A45Pwr	30amp	4.1
F19	FuseBoxFJB	563165	A46Pwr	30amp	4.1
F20	FuseBoxFJB	563280	A55/A15Pwr	5amp	4.1
F21	FuseBoxFJB	563280	A48Pwr	30amp	4.1
F22	FuseBoxFJB	563280	ELD	5amp	4.1
F23	FuseBoxFJB	563165	ESP	30amp	4.1
F24	FuseBoxFJB	563284	12VICust	15amp	4.1
F25	FuseBoxFJB	563283	12VOutlet	15amp	4.1
F26	FuseBoxFJB	563283	Spare	15amp	4.1
F27	FuseBoxFJB	563165	DriverSeat	30amp	4.1
F29	FuseBoxFJB	563283	Shutdown	10amp	4.1
F30	FuseBoxFJB	563283	OBDCon	5amp	4.1
F33	FuseBoxFJB	563280	TGW	5amp	4.1
F34	FuseBoxFJB	563280	Spare	15amp	4.1
F35	FuseBoxFJB	563280	MCMPwr	5amp	4.2
F36	FuseBoxFJB	563279	StartSw	5amp	4.2
F37	FuseBoxFJB	563280	Haz/ExtDoorSw	5amp	4.2
F39	FuseBoxFJB	563284	24VDCust	15amp	4.2
F40	FuseBoxFJB	563284	FireSupp	15amp	4.2
F41	FuseBoxFJB	563280	A41Pwr	5amp	4.2
F42	FuseBoxFJB	563283	Spare	10amp	4.1
F43	FuseBoxFJB	563282	Spare	20amp	4.1
F44	FuseBoxFJB	563165	A44Pwr	30amp	4.2
F45	FuseBoxFJB	563165	A47Pwr	30amp	4.2
F46	FuseBoxFJB	563165	A56Pwr	5amp	4.2
F47	FuseBoxFJB	563280	MCM	5amp	4.2
F50	FuseBoxFJB	563280	Defrost	30amp	4.2
F51	FuseBoxFJB	563280	A42Pwr	5amp	4.2
F52	FuseBoxFJB	563279	FMSGW	5amp	4.2
F53	FuseBoxFJB	563283	LevelLow	10amp	4.2
F54	FuseBoxFJB	563153	Spare	15Amp	4.2
F55	FuseBoxFJB	563004	Spare	10amp	4.2
F56	FuseBoxFJB	563004	Spare	15amp	4.2
F57	FuseBoxFJB	563004	Spare	10amp	4.2

FUSES LIST

No	Location	Part #	Function	Rating	Page
F58	FuseBoxFJB	563004	Spare	15amp	4.2
F73	FuseBoxRJB	563283	EngECU	20amp	5.1
F90	FuseBoxRJB	563282	UreaSys	20amp	5.1
F91	FuseBoxRJB	563282	EngECU	20amp	5.1
F95	FuseBoxFJB	563004	FMSGW	5amp	4.2
F96	FuseBoxRJB	563280	VECUPwr	5amp	5.1
F99	FuseBoxRJB	563165	EngECU	30amp	5.1
F100	FuseBoxRJB	563283	Spare	10amp	5.1
F101	RJB	564520	Fansdriveelectric	300amp	3.1
F105	FuseBoxRJB	563282	Spare	20amp	5.1
F106	FuseBoxRJB	563153	A50Pwr	30amp	5.1
F107	FuseBoxRJB	563153	A51Pwr	30amp	5.1
F108	FuseBoxRJB	563280	OBDConPwr	5amp	5.1
F109	FuseBoxRJB	563280	RrProxSw	5amp	5.1
F110	FuseBoxRJB	563283	TransPwr	10amp	5.1
F112	FuseBoxRJB	563165	Spare	30amp	5.1
F113	FuseBoxRJB	563284	Spare	10amp	5.1
F114	FuseBoxRJB	563284	Spare	15amp	5.1
F115	FuseBoxRJB	563283	Spare	20amp	5.1
F116	FuseBoxRJB	563284	Spare	15amp	5.1
F118	FuseBoxRJB	563284	Trailer	15amp	5.1
F120	FuseBoxRJB	563284	Spare	15amp	5.1
F121	FuseBoxRJB	563284	12WUPCust	15amp	5.1
F122	FuseBoxRJB	563153	Equalizer	10amp	5.1
F123	FuseBoxRJB	563284	Spare	25amp	5.1
F124	FuseBoxRJB	563284	Spare	25amp	5.1
F126	FuseBoxRJB	563280	R29/So11	5amp	5.1
F127	FuseBoxRJB	563284	Spare	15amp	5.1
F129	FuseBoxRJB	563284	Spare	15amp	5.1
F130	FuseBoxRJB	563284	WinAjar	25amp	5.1
F131	FuseBoxRJB	563284	24VDCust	5amp	5.1
F132	FuseBoxRJB	563280	A57Pwr	5amp	5.1
F133	FuseBoxRJB	563165	A49Pwr	30amp	5.1
F134	FuseBoxRJB	563165	A52Pwr	30amp	5.1
F135	FuseBoxRJB	563165	A54Pwr	30amp	5.1
F136	FuseBoxRJB	563165	A58/A59Pwr	30amp	5.1
F137	FuseBoxRJB	563280	Spare	5amp	5.1
F138	FuseBoxRJB	563280	Spare	5amp	5.1
F139	FuseBoxRJB	563279	Altern	10amp	5.1
F140	FuseBoxRJB	563283	Spare	10amp	5.1
F141	FuseBoxRJB	563284	Mo7Cond	25amp	5.1
F142	FuseBoxRJB	563284	Mo8Cond	25amp	5.1
F143	FuseBoxRJB	563284	*opt*	25amp	5.1

FUSES LIST

No	Location	Part #	Function	Rating	Page
F144	FuseBoxRJB	563284	*opt*	25amp	5.1
F145	FuseBoxRJB	563153	Spare	25amp	5.1
F146	FuseBoxRJB	563153	Spare	10amp	5.1
F147	FuseBoxRJB	563284	24WupCust	15amp	5.1
F148	FuseBoxRJB	563284	Spare	30amp	5.1
F149	FuseBoxRJB	563284	UreaSystem	20amp	5.1
F150	FuseBoxRJB	563284	*opt*	10amp	5.1
F151	FuseBoxRJB	563284	Mo28	15amp	5.1
F152	FuseBoxRJB	563283	Spare	10amp	5.1
F167	RH_Console	563283	LuggageCompt.Lights	10amp	25.1SP1
F199	RJB	562597	RADFans	300Amp	13.1
F209	RJB	562597	PreHeat	150A	14.1
F302	VECT	563282	Trailerbrakelights	20amp	26.4
F303	VECT	563282	Trailertailandrunninglights	20amp	26.4
F304	VECT	563282	TrailerBackuplights	20amp	26.4

Wire identification chart

**Note that the identification comes from the uphill component.*

Wire identification exemple: 12 - A47J1.8 - 16

Voltage	Circuit number	Wire size
0		0000
5	***Ground circuits:***	000
0/12	Electronic = Use I/O module number followed by an "R" and pin number. (ex: A47RJ1.8, A54RJ2.14)	00
0/24	Electronic ground studs = Use number "00" followed with the stud location and sequential number. (ex: 00R1, 00F4)	0
12	Chassis = Use number "0" followed by the ground stud location and sequential number. (ex: 0EV1, 0FH2)	1
24		2
120	***Power and voltage carrying circuits:***	3
ANA	Power distribution = Use uphill component identification as circuit name. (ex: F96, CB22)	4
BBUS	Multiplex outputs = Use output module number and pin number as circuit name. (ex: A55J1.4, A49J2.9)	6
DATA	Relays, diodes, resistors and any other component outputs =	8
DBUS	Use component name and pin number as circuit name. (ex: Sw55.A, R30.87, D12.B)	10
J1587	***Networks:***	12
J1939	DL0 = Bbus mux DL7 = Engine subnet	14
J2284	DL1 = J1939 DL9 = Power train subnet	16
LIN	DL2 = J2284 900 / 901 = J1587	18
PWM	DL3 = Dbus mux	20
GND		22
...OTHER		24

Batteries and alternators

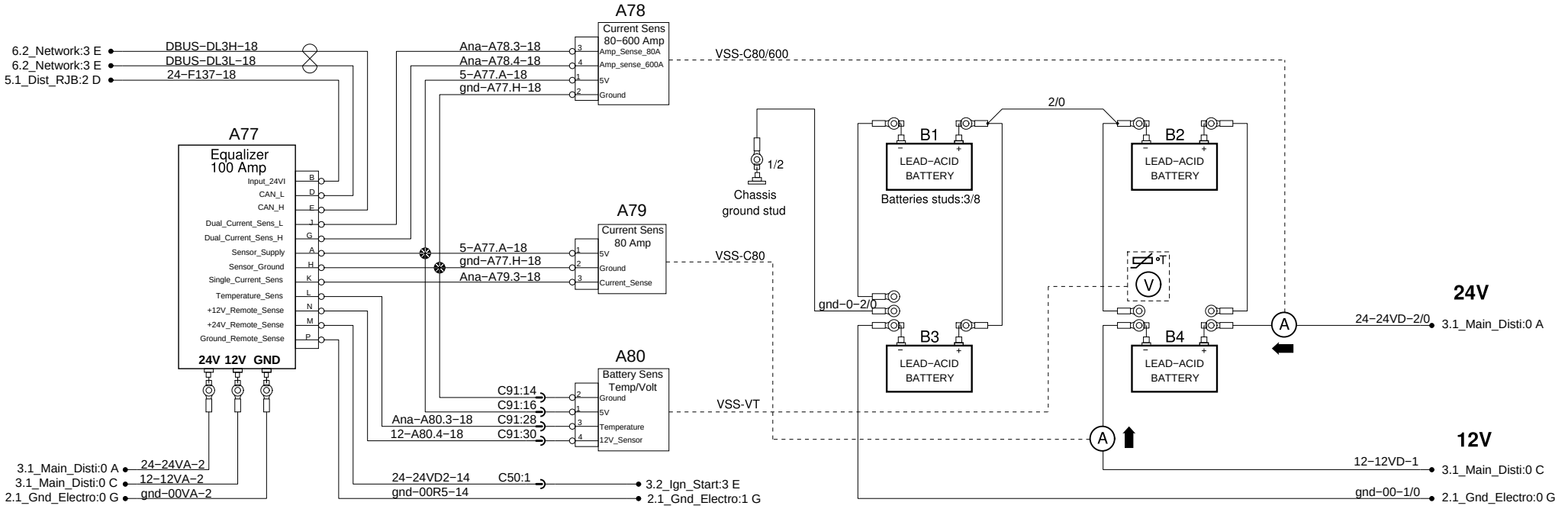

RJB Fan

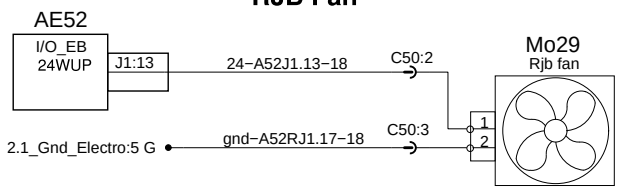

Alternators

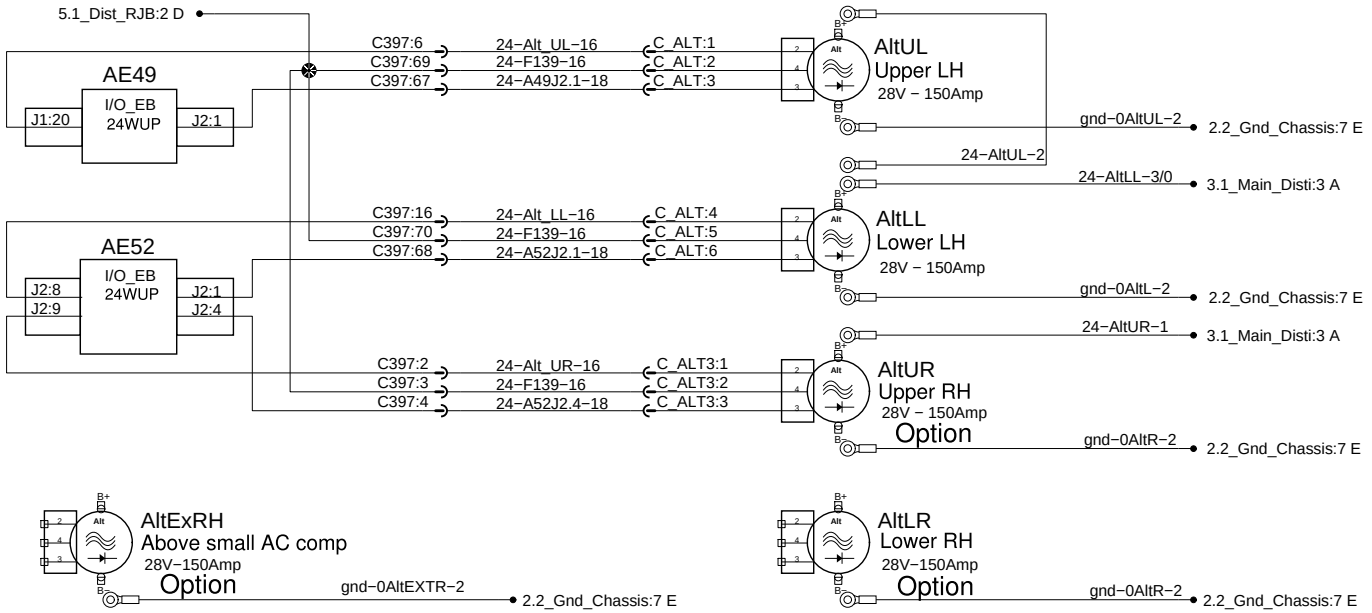

Batteries and alternators

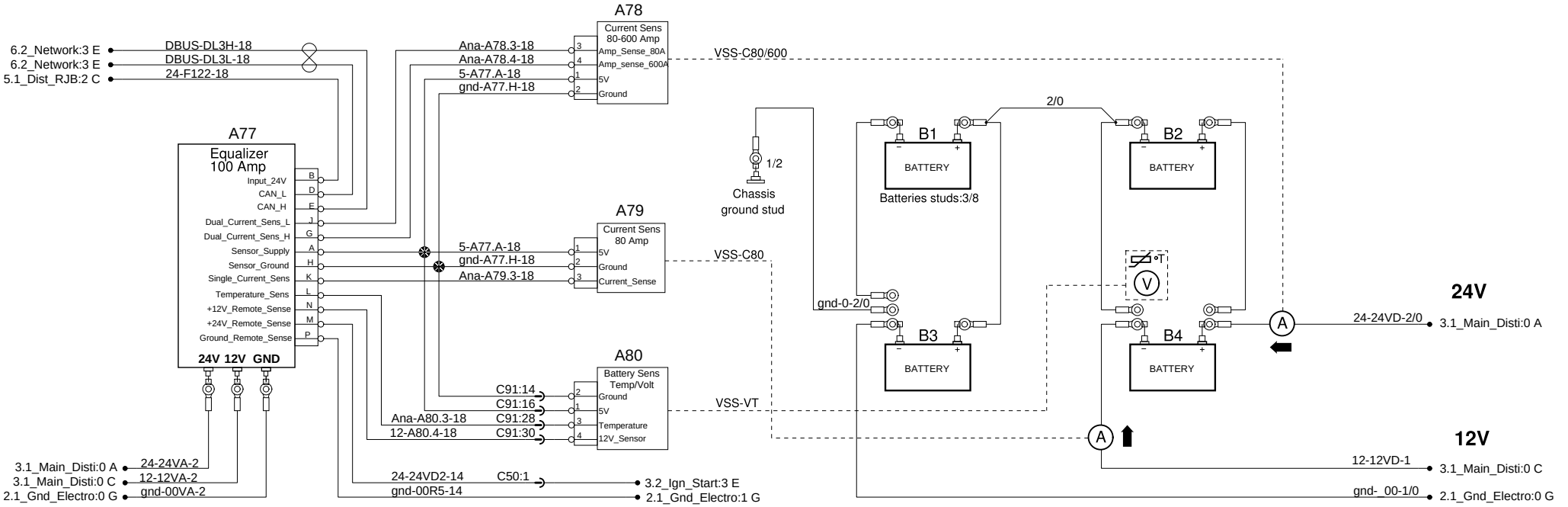

RJB Fan

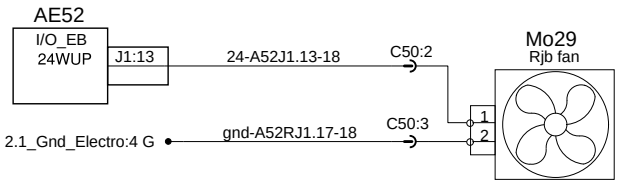

Alternators

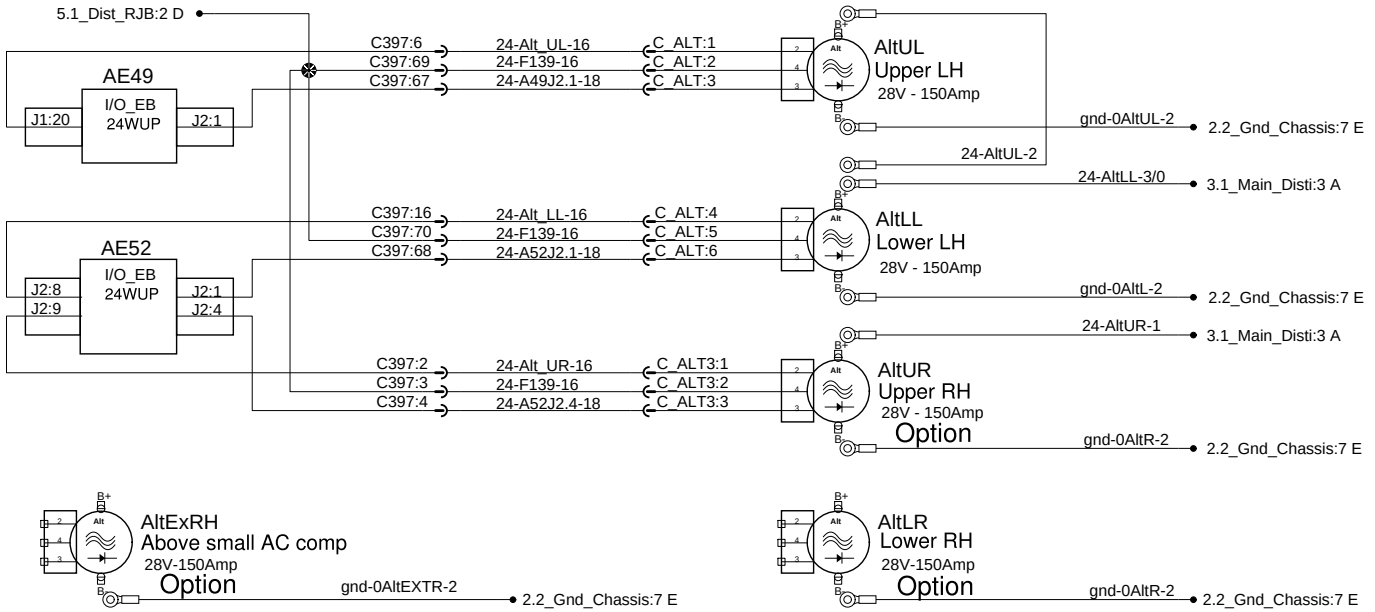

Batteries and alternators

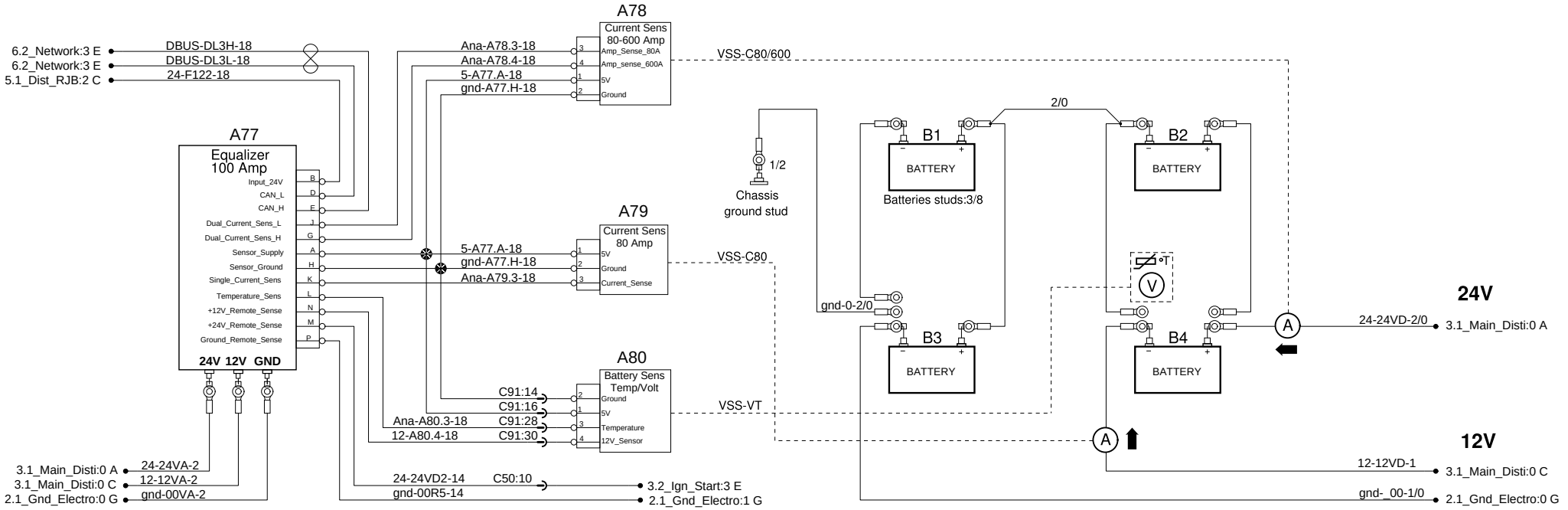

RJB Fan

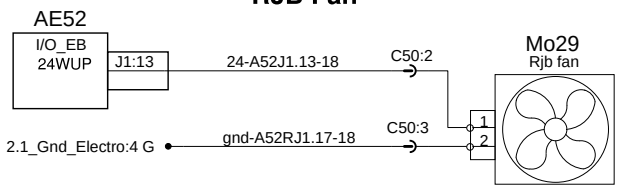

Alternators

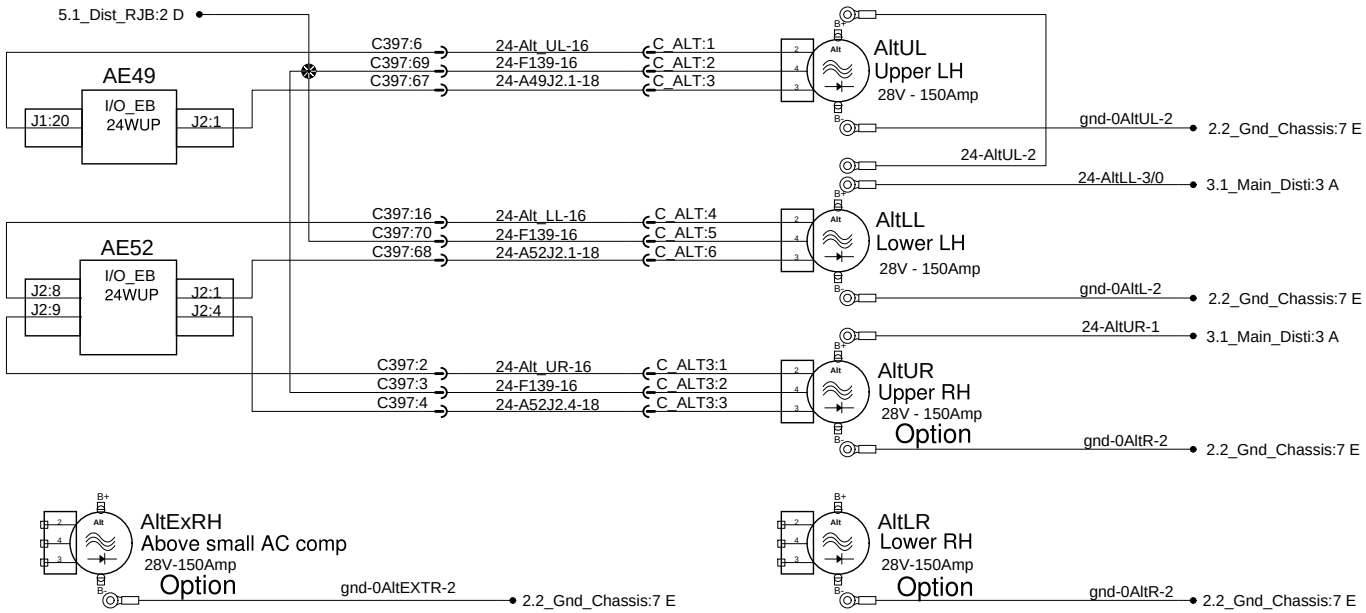

Electronic ground distribution

Ground distribution:
0-Electric gnd
00- Electronic Gnd

A-Dash - Lh console harness
F-Front junction box harness
FH-Front harness
R-Rear junction box harness
FR-Front to rear

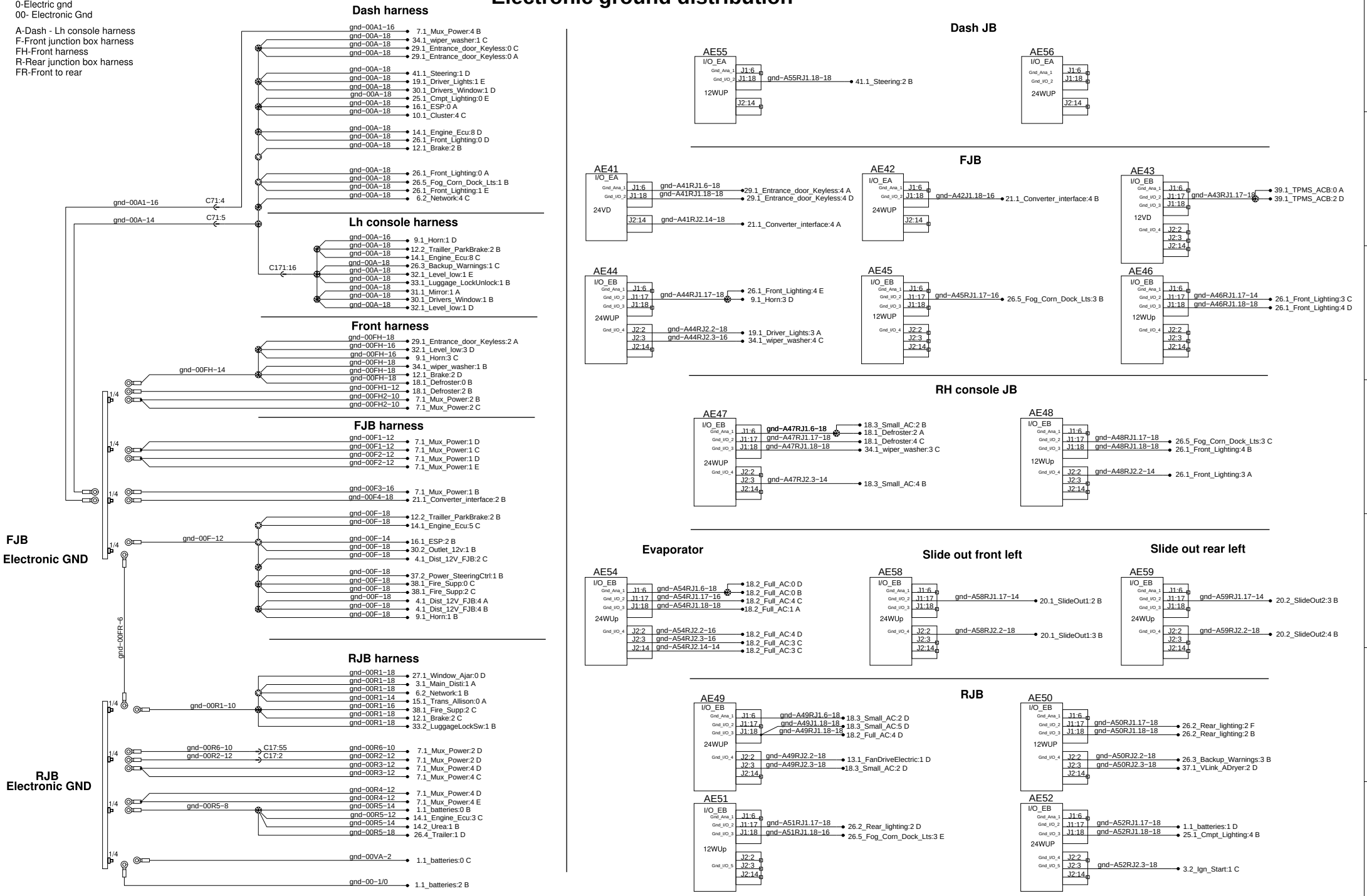

Electronic ground distribution

Ground distribution:
0-Electric gnd
00- Electronic Gnd

A-Dash - Lh console harness
F-Front junction box harness
FH-Front harness
R-Rear junction box harness
FR-Front to rear

Dash harness

gnd-00A1-16 — 7.1_Mux_Power:4 B
gnd-00A-18 — 34.1_wiper_washer:1 C
gnd-00A-18 — 29.1_Entrance_door_Keyless:0 C
gnd-00A-18 — 29.1_Entrance_door_Keyless:0 A
gnd-00A-18 — 41.1_Steering:1 D
gnd-00A-18 — 19.1_Driver_Lights:1 E
gnd-00A-18 — 30.1_Drivers_Window:1 D
gnd-00A-18 — 25.1_Cmpt_Lighting:0 E
gnd-00A-18 — 16.1_ESP:0 A
gnd-00A-18 — 10.1_Cluster:4 C
gnd-00A-18 — 14.1_Engine_Ecu:8 D
gnd-00A-18 — 26.1_Front_Lighting:0 D
gnd-00A-18 — 12.1_Brake:2 B
gnd-00A-18 — 36.1_WCL_Ricon:6 E
gnd-00A-18 — 26.1_Front_Lighting:0 A
gnd-00A-18 — 26.5_Fog_Corn_Dock_Lts:1 B
gnd-00A-18 — 26.1_Front_Lighting:1 E
gnd-00A-18 — 6.2_Network:4 C

gnd-00A1-16 — C71:4
gnd-00A-14 — C71:5

Lh console harness

C171:16
gnd-00A-16 — 9.1_Horn:1 D
gnd-00A-18 — 12.2_Trailler_ParkBrake:2 B
gnd-00A-18 — 14.1_Engine_Ecu:8 C
gnd-00A-18 — 26.3_Backup_Warnings:1 C
gnd-00A-18 — 32.1_Level_low:1 E
gnd-00A-18 — 33.1_Luggage_LockUnlock:1 B
gnd-00A-18 — 31.1_Mirror:1 A
gnd-00A-18 — 30.1_Drivers_Window:1 B
gnd-00A-18 — 32.1_Level_low:1 D

Front harness

gnd-00FH-14
gnd-00FH-18 — 29.1_Entrance_door_Keyless:2 A
gnd-00FH-16 — 32.1_Level_low:3 D
gnd-00FH-16 — 9.1_Horn:3 C
gnd-00FH-18 — 34.1_wiper_washer:1 B
gnd-00FH-18 — 12.1_Brake:2 D
gnd-00FH-18 — 18.1_Defroster:0 B
gnd-00FH1-12 — 18.1_Defroster:2 B
gnd-00FH2-10 — 7.1_Mux_Power:2 B
gnd-00FH2-10 — 7.1_Mux_Power:2 C

FJB harness

gnd-00FR-6
gnd-00F1-12 — 7.1_Mux_Power:1 D
gnd-00F1-12 — 7.1_Mux_Power:1 C
gnd-00F2-12 — 7.1_Mux_Power:1 D
gnd-00F2-12 — 7.1_Mux_Power:1 E
gnd-00F3-16 — 7.1_Mux_Power:1 B
gnd-00F4-18 — 21.1_Converter_interface:2 B
gnd-00F5-12 — 26.4_Trailer:0 A

FJB Electronic GND

gnd-00F-12
gnd-00F-18 — 12.2_Trailler_ParkBrake:2 B
gnd-00F-18 — 14.1_Engine_Ecu:5 C
gnd-00F-14 — 16.1_ESP:2 B
gnd-00F-18 — 30.2_Outlet_12v:1 B
gnd-00F-18 — 4.1_Dist_12V_FJB:2 C
gnd-00F-18 — 37.2_Power_SteeringCtrl:1 B
gnd-00F-18 — 38.1_Fire_Supp:0 C
gnd-00F-18 — 38.1_Fire_Supp:2 C
gnd-00F-18 — 4.1_Dist_12V_FJB:4 A
gnd-00F-18 — 4.1_Dist_12V_FJB:4 B
gnd-00F-18 — 9.1_Horn:1 B

RJB harness

gnd-00R1-10
gnd-00R1-18 — 27.1_Window_Ajar:0 D
gnd-00R1-18 — 3.1_Main_Disti:1 A
gnd-00R1-18 — 6.2_Network:1 B
gnd-00R1-14 — 15.1_Trans_Allison:0 A
gnd-00R1-16 — 38.1_Fire_Supp:2 C
gnd-00R1-18 — 12.1_Brake:2 C
gnd-00R1-18 — 33.2_LuggageLockSw:1 B

RJB Electronic GND

gnd-00R6-10 — C17:55
gnd-00R2-12 — C17:2
gnd-00R6-10 — 7.1_Mux_Power:2 D
gnd-00R2-12 — 7.1_Mux_Power:2 D
gnd-00R3-12 — 7.1_Mux_Power:4 D
gnd-00R3-12 — 7.1_Mux_Power:4 C
gnd-00R4-12 — 7.1_Mux_Power:4 D
gnd-00R4-12 — 7.1_Mux_Power:4 E
gnd-00R4-16 — C17:92
gnd-00R4-16 — 7.1_Mux_Power:4 B
gnd-00R5-8 — 1.1_batteries:0 B
gnd-00R5-14 — 1.1_batteries:0 B
gnd-00R5-12 — 14.1_Engine_Ecu:3 C
gnd-00R5-14 — 14.2_Urea:1 B
gnd-00R5-18 — 26.4_Trailer:1 E
gnd-00VA-2 — 1.1_batteries:0 C
gnd-00-1/0 — 1.1_batteries:2 B

Dash JB

AE55 I/O_EA 12WUP
J1:6, J1:18 — gnd-A55RJ1.18-18 — 41.1_Steering:2 B
J2:14

AE56 I/O_EA 24WUP
J1:6, J1:18
J2:14

FJB

AE41 I/O_EA 24VD
J1:6, J1:18 — gnd-A41RJ1.6-18 — 29.1_Entrance_door_Keyless:4 A
gnd-A41RJ1.18-18 — 29.1_Entrance_door_Keyless:4 D
J2:14 — gnd-A41RJ2.14-18 — 21.1_Converter_interface:4 A

AE42 I/O_EA 24WUP
J1:6, J1:18 — gnd-A42J1.18-16 — 21.1_Converter_interface:4 B
J2:14

AE43 I/O_EB 12VD
J1:6, J1:17, J1:18 — gnd-A43RJ1.17-18 — 39.1_TPMS_ACB:0 A
39.1_TPMS_ACB:2 D
J2:2, J2:3, J2:14

AE44 I/O_EB 24WUP
J1:6, J1:17, J1:18 — gnd-A44RJ1.17-18 — 26.1_Front_Lighting:4 E
9.1_Horn:3 D
J2:2, J2:3, J2:14 — gnd-A44RJ2.2-18, gnd-A44RJ2.3-16 — 19.1_Driver_Lights:3 A
34.1_wiper_washer:4 C

AE45 I/O_EB 12WUP
J1:6, J1:17, J1:18 — gnd-A45RJ1.17-16 — 26.5_Fog_Corn_Dock_Lts:3 B
J2:2, J2:3, J2:14

AE46 I/O_EB 12WUp
J1:6, J1:17, J1:18 — gnd-A46RJ1.17-14 — 26.1_Front_Lighting:3 C
gnd-A46RJ1.18-18 — 26.1_Front_Lighting:4 D
J2:2, J2:3, J2:14

RH console JB

AE47 I/O_EB 24WUP
J1:6, J1:17, J1:18 — gnd-A47RJ1.6-18 — 18.3_Small_AC:2 B
gnd-A47RJ1.17-18 — 18.1_Defroster:2 A
gnd-A47RJ1.18-18 — 18.1_Defroster:4 C
34.1_wiper_washer:3 C
J2:2, J2:3, J2:14 — gnd-A47RJ2.3-14 — 18.3_Small_AC:4 B

AE48 I/O_EB 12WUp
J1:6, J1:17, J1:18 — gnd-A48RJ1.17-18 — 26.5_Fog_Corn_Dock_Lts:3 C
gnd-A48RJ1.18-18 — 26.1_Front_Lighting:4 B
J2:2, J2:3, J2:14 — gnd-A48RJ2.2-14 — 26.1_Front_Lighting:3 A

Evaporator

AE54 I/O_EB 24WUp
J1:6, J1:17, J1:18 — gnd-A54RJ1.6-18 — 18.2_Full_AC:0 D
gnd-A54RJ1.17-16 — 18.2_Full_AC:0 B
gnd-A54RJ1.18-18 — 18.2_Full_AC:4 C
18.2_Full_AC:1 A
J2:2, J2:3, J2:14 — gnd-A54RJ2.2-16 — 18.2_Full_AC:4 D
gnd-A54RJ2.3-16 — 18.2_Full_AC:3 C
gnd-A54RJ2.14-14 — 18.2_Full_AC:2 C

Slide out front left

AE58 I/O_EB 24WUp
J1:6, J1:17, J1:18 — gnd-A58RJ1.17-14 — 20.1_SlideOut1:2 B
J2:2, J2:3, J2:14 — gnd-A58RJ2.2-18 — 20.1_SlideOut1:3 B

Slide out rear left

AE59 I/O_EB 24WUp
J1:6, J1:17, J1:18 — gnd-A59RJ1.17-14 — 20.2_SlideOut2:3 B
J2:2, J2:3, J2:14 — gnd-A59RJ2.2-18 — 20.2_SlideOut2:4 B

RJB

AE49 I/O_EB 24WUP
J1:6, J1:17, J1:18 — gnd-A49RJ1.6-18 — 18.3_Small_AC:2 D
gnd-A49J1.18-18 — 18.3_Small_AC:5 D
gnd-A49RJ1.18-18 — 18.2_Full_AC:4 D
J2:2, J2:3, J2:14 — gnd-A49RJ2.2-18 — 13.1_FanDriveElectric:1 D
gnd-A49RJ2.3-18 — 18.3_Small_AC:2 D

AE50 I/O_EB 12WUP
J1:6, J1:17, J1:18 — gnd-A50RJ1.17-18 — 26.2_Rear_lighting:2 F
gnd-A50RJ1.18-18 — 26.2_Rear_lighting:2 B
J2:2, J2:3, J2:14 — gnd-A50RJ2.2-18 — 26.3_Backup_Warnings:3 B
gnd-A50RJ2.3-18 — 37.1_VLink_ADryer:2 D

AE51 I/O_EB 12WUp
J1:6, J1:17, J1:18 — gnd-A51RJ1.17-18 — 26.2_Rear_lighting:2 D
gnd-A51RJ1.18-14 — 26.5_Fog_Corn_Dock_Lts:3 E
36.1_WCL_Ricon:4 F
J2:2, J2:3, J2:14

AE52 I/O_EB 24WUP
J1:6, J1:17, J1:18 — gnd-A52RJ1.17-18 — 1.1_batteries:1 D
gnd-A52RJ1.18-18 — 25.1_Cmpt_Lighting:4 B
J2:2, J2:3, J2:14 — gnd-A52RJ2.3-18 — 3.2_Ign_Start:1 C

WCL

AE57 I/O_EA 24WUp
J1:6, J1:18
J2:14 — gnd-A57RJ2.14-18 — 36.1_WCL_Ricon:7 D

Electronic ground distribution

Ground distribution:
0-Electric gnd
00- Electronic Gnd

A-Dash - Lh console harness
F-Front junction box harness
FH-Front harness
R-Rear junction box harness
FR-Front to rear

Dash harness

gnd-00A1-16 → 7.1_Mux_Power:4 B
gnd-00A-18 → 34.1_wiper_washer:1 C
gnd-00A-18 → 29.1_Entrance_door_Keyless:0 C
gnd-00A-18 → 29.1_Entrance_door_Keyless:0 A
gnd-00A-18 → 41.1_Steering:1 D
gnd-00A-18 → 19.1_Driver_Lights:1 E
gnd-00A-18 → 30.1_Drivers_Window:1 D
gnd-00A-18 → 19.1_Driver_Lights:1 C
gnd-00A-18 → 16.1_ESP:0 A
gnd-00A-18 → 10.1_Cluster:3 B
gnd-00A-18 → 14.1_Engine_Ecu:8 D
gnd-00A-18 → 26.1_Front_Lighting:0 D
gnd-00A-18 → 12.1_Brake:2 B
gnd-00A-18 → 36.1_WCL_Ricon:6 E
gnd-00A-18 → 26.1_Front_Lighting:0 A
gnd-00A-18 → 26.5_Fog_Corn_Dock_Lts:1 B
gnd-00A-18 → 26.1_Front_Lighting:1 E
gnd-00A-18 → 6.2_Network:4 C

gnd-00A1-16 — C71:4
gnd-00A-14 — C71:5

Lh console harness

C171:16
gnd-00A-16 → 9.1_Horn:1 D
gnd-00A-18 → 12.2_Trailler_ParkBrake:2 B
gnd-00A-18 → 14.1_Engine_Ecu:8 C
gnd-00A-18 → 26.3_Backup_Warnings:1 C
gnd-00A-18 → 32.1_Level_low:1 E
gnd-00A-18 → 33.1_Luggage_LockUnlock:1 B
gnd-00A-18 → 31.1_Mirror:1 A
gnd-00A-18 → 30.1_Drivers_Window:1 B
gnd-00A-18 → 32.1_Level_low:1 D

Front harness

gnd-00FH-14
gnd-00FH-18 → 29.1_Entrance_door_Keyless:2 A
gnd-00FH-16 → 32.1_Level_low:3 D
gnd-00FH-16 → 9.1_Horn:3 C
gnd-00FH-18 → 34.1_wiper_washer:1 B
gnd-00FH-18 → 12.1_Brake:2 D
gnd-00FH-18 → 18.1_Defroster:0 B
gnd-00FH1-12 → 18.1_Defroster:2 B
gnd-00FH2-10 → 7.1_Mux_Power:2 B
gnd-00FH2-10 → 7.1_Mux_Power:2 C

FJB harness

1/4
gnd-00F1-12 → 7.1_Mux_Power:1 D
gnd-00F1-12 → 7.1_Mux_Power:1 C
gnd-00F2-12 → 7.1_Mux_Power:1 D
gnd-00F2-12 → 7.1_Mux_Power:1 E

1/4
gnd-00F3-16 → 7.1_Mux_Power:1 B
gnd-00F4-18 → 21.1_Converter_interface:2 B
gnd-00F5-12 → 26.4_Trailer:1 A

FJB Electronic GND

1/4
gnd-00F-12
gnd-00F-18 → 12.2_Trailler_ParkBrake:2 B
gnd-00F-18 → 14.1_Engine_Ecu:5 C
gnd-00F-18 → 42.4_ELD_ITS_Gateway:5 C
gnd-00F-14 → 16.1_ESP:2 B
gnd-00F-18 → 30.2_Outlet_12v:1 B
gnd-00F-18 → 4.1_Dist_12V_FJB:2 C
gnd-00F-18 → 37.2_Power_SteeringCtrl:1 B
gnd-00F-18 → 38.1_Fire_Supp:0 C
gnd-00F-18 → 38.1_Fire_Supp:2 C
gnd-00F-18 → 4.1_Dist_12V_FJB:4 A
gnd-00F-18 → 4.1_Dist_12V_FJB:4 B
gnd-00F-18 → 9.1_Horn:1 B

gnd-00FR-1

RJB harness

gnd-00R1-18 → 27.1_Window_Ajar:0 D
gnd-00R1-18 → 3.1_Main_Disti:1 A
gnd-00R1-18 → 6.2_Network:1 B
gnd-00R1-14 → 15.1_Trans_Allison:0 A
gnd-00R1-16 → 38.1_Fire_Supp:2 C
gnd-00R1-10
gnd-00R1-18 → 12.1_Brake:2 C
gnd-00R1-18 → 33.2_LuggageLockSw:1 B
gnd-00R1-18 → 3.2_Ign_Start:1 C

RJB Electronic GND

gnd-00R6-10 — C17:55 → gnd-00R6-10 → 7.1_Mux_Power:2 D
gnd-00R2-12 — C17:2 → gnd-00R2-12 → 7.1_Mux_Power:2 D
gnd-00R3-12 → 7.1_Mux_Power:4 D
gnd-00R3-12 → 7.1_Mux_Power:4 C

gnd-00R4-12 → 7.1_Mux_Power:4 D
gnd-00R4-12 → 7.1_Mux_Power:4 E
gnd-00R4-16 — C17:92 → gnd-00R4-16 → 7.1_Mux_Power:4 B
gnd-00R5-8 → gnd-00R5-14 → 1.1_batteries:0 B
gnd-00R5-12 → 14.1_Engine_Ecu:3 C
gnd-00R5-14 → 14.2_Urea:1 B
gnd-00R5-18 → 26.4_Trailer:1 E

gnd-00VA-2 → 1.1_batteries:0 C
gnd-_00-1/0 → 1.1_batteries:2 B

Dash JB

AE55 I/O_EA, 12WUP
J1:6 Gnd_Ana_1
J1:18 Gnd_I/O_2 — gnd-A55RJ1.18-18 → 41.1_Steering:2 B
J2:14

AE56 I/O_EA, 24WUP
J1:6 Gnd_Ana_1
J1:18 Gnd_I/O_2
J2:14

FJB

AE41 I/O_EA, 24VD
J1:6 Gnd_Ana_1
J1:18 Gnd_I/O_2 — gnd-A41RJ1.6-18 → 29.1_Entrance_door_Keyless:4 A; gnd-A41RJ1.18-18 → 29.1_Entrance_door_Keyless:4 D
J2:14 — gnd-A41RJ2.14-18 → 21.1_Converter_interface:4 A

AE42 I/O_EA, 24WUP
J1:6 Gnd_Ana_1
J1:18 Gnd_I/O_2 — gnd-A42J1.18-16 → 21.1_Converter_interface:4 B
J2:14

AE43 I/O_EB, 12VD
J1:6 Gnd_Ana_1
J1:17 Gnd_I/O_2
J1:18 Gnd_I/O_3 — gnd-A43RJ1.17-18 → 39.1_TPMS_ACB:0 A; 39.1_TPMS_ACB:2 D
Gnd_I/O_4
J2:2
J2:3
J2:14

AE44 I/O_EB, 24WUP
J1:6 Gnd_Ana_1
J1:17 Gnd_I/O_2 — gnd-A44RJ1.17-18 → 26.1_Front_Lighting:4 E; 9.1_Horn:3 D
J1:18 Gnd_I/O_3
Gnd_I/O_4
J2:2 — gnd-A44RJ2.2-18 → 19.1_Driver_Lights:3 A
J2:3 — gnd-A44RJ2.3-16 → 34.1_wiper_washer:4 C
J2:14

AE45 I/O_EB, 12WUP
J1:6 Gnd_Ana_1
J1:17 Gnd_I/O_2 — gnd-A45RJ1.17-16 → 26.5_Fog_Corn_Dock_Lts:3 B
J1:18 Gnd_I/O_3
Gnd_I/O_4
J2:2
J2:3
J2:14

AE46 I/O_EB, 12WUp
J1:6 Gnd_Ana_1
J1:17 Gnd_I/O_2 — gnd-A46RJ1.17-14 → 26.1_Front_Lighting:3 C
J1:18 Gnd_I/O_3 — gnd-A46RJ1.18-18 → 26.1_Front_Lighting:4 D
Gnd_I/O_4
J2:2
J2:3
J2:14

RH console JB

AE47 I/O_EB, 24WUP
J1:6 Gnd_Ana_1 — gnd-A47RJ1.6-18 → 18.3_Small_AC:2 B; 18.1_Defroster:2 A
J1:17 Gnd_I/O_2 — gnd-A47RJ1.17-18 → 18.1_Defroster:4 C
J1:18 Gnd_I/O_3 — gnd-A47RJ1.18-18 → 34.1_wiper_washer:3 C
Gnd_I/O_4
J2:2
J2:3 — gnd-A47RJ2.3-14 → 18.3_Small_AC:4 B
J2:14

AE48 I/O_EB, 12WUp
J1:6 Gnd_Ana_1
J1:17 Gnd_I/O_2 — gnd-A48RJ1.17-18 → 26.5_Fog_Corn_Dock_Lts:3 C
J1:18 Gnd_I/O_3 — gnd-A48RJ1.18-18 → 26.1_Front_Lighting:4 B
Gnd_I/O_4
J2:2 — gnd-A48RJ2.2-14 → 26.1_Front_Lighting:3 A
J2:3
J2:14

Evaporator

AE54 I/O_EB, 24WUp
J1:6 Gnd_Ana_1
J1:17 Gnd_I/O_2 — gnd-A54RJ1.6-18 → 18.2_Full_AC:0 D; 18.2_Full_AC:0 B
J1:18 Gnd_I/O_3 — gnd-A54RJ1.17-16 → 18.2_Full_AC:4 C; gnd-A54RJ1.18-18 → 18.2_Full_AC:1 A
Gnd_I/O_4
J2:2 — gnd-A54RJ2.2-16 → 18.2_Full_AC:4 D
J2:3 — gnd-A54RJ2.3-16 → 18.2_Full_AC:3 C
J2:14 — gnd-A54RJ2.14-14 → 18.2_Full_AC:2 C

Slide out front left

AE58 I/O_EB, 24WUp
J1:6 Gnd_Ana_1
J1:17 Gnd_I/O_2 — gnd-A58RJ1.17-14 → 20.1_SlideOut1:2 B
J1:18 Gnd_I/O_3
Gnd_I/O_4
J2:2 — gnd-A58RJ2.2-18 → 20.1_SlideOut1:3 B
J2:3
J2:14

Slide out rear left

AE59 I/O_EB, 24WUp
J1:6 Gnd_Ana_1
J1:17 Gnd_I/O_2 — gnd-A59RJ1.17-14 → 20.2_SlideOut2:3 B
J1:18 Gnd_I/O_3
Gnd_I/O_4
J2:2 — gnd-A59RJ2.2-18 → 20.2_SlideOut2:4 B
J2:3
J2:14

RJB

AE49 I/O_EB, 24WUP
J1:6 Gnd_Ana_1
J1:17 Gnd_I/O_2 — gnd-A49RJ1.6-18 → 18.3_Small_AC:2 D
J1:18 Gnd_I/O_3 — gnd-A49J1.18-18 → 18.3_Small_AC:5 D; gnd-A49RJ1.18-18 → 18.2_Full_AC:4 D
Gnd_I/O_4
J2:2 — gnd-A49RJ2.2-18 → 13.1_FanDriveElectric:1 D
J2:3 — gnd-A49RJ2.3-18 → 18.3_Small_AC:2 D
J2:14

AE50 I/O_EB, 12WUP
J1:6 Gnd_Ana_1
J1:17 Gnd_I/O_2 — gnd-A50RJ1.17-18 → 26.2_Rear_lighting:2 F
J1:18 Gnd_I/O_3 — gnd-A50RJ1.18-18 → 26.2_Rear_lighting:2 B
Gnd_I/O_4
J2:2 — gnd-A50RJ2.2-18 → 26.3_Backup_Warnings:3 B
J2:3 — gnd-A50RJ2.3-18 → 37.1_VLink_ADryer:2 D
J2:14

AE51 I/O_EB, 12WUp
J1:6 Gnd_Ana_1
J1:17 Gnd_I/O_2 — gnd-A51RJ1.17-18 → 26.2_Rear_lighting:2 D
J1:18 Gnd_I/O_3 — gnd-A51RJ1.18-14 → 26.5_Fog_Corn_Dock_Lts:3 E; 36.1_WCL_Ricon:4 F
Gnd_I/O_4
Gnd_I/O_5
J2:2
J2:3
J2:14

AE52 I/O_EB, 24WUP
J1:6 Gnd_Ana_1
J1:17 Gnd_I/O_2 — gnd-A52RJ1.17-18 → 1.1_batteries:1 D
J1:18 Gnd_I/O_3 — gnd-A52RJ1.18-18 → 25.1_Cmpt_Lighting:4 B
Gnd_I/O_4
Gnd_I/O_5
J2:2
J2:3
J2:14

WCL

AE57 I/O_EA, 24WUp
J1:6 Gnd_Ana_1
J1:18 Gnd_I/O_2 — gnd-A57RJ1.18-18 → 36.1_WCL_Ricon:6 B
J2:14

Electronic ground distribution

Ground distribution:
0-Electric gnd
00- Electronic Gnd

A-Dash - Lh console harness
F-Front junction box harness
FH-Front harness
R-Rear junction box harness
FR-Front to rear

Dash harness

gnd-00A1-16 — 7.1_Mux_Power:4 B
gnd-00A-18 — 34.1_wiper_washer:1 C
gnd-00A-18 — 29.1_Entrance_door_Keyless:0 C
gnd-00A-18 — 29.1_Entrance_door_Keyless:0 A
gnd-00A-18 — 41.1_Steering:1 D
gnd-00A-18 — 19.1_Driver_Lights:1 E
gnd-00A-18 — 30.1_Drivers_Window:1 D
gnd-00A-18 — 19.1_Driver_Lights:1 C
gnd-00A-18 — 16.1_ESP:0 A
gnd-00A-18 — 10.1_Cluster:3 B
gnd-00A-18 — 14.1_Engine_Ecu:8 D
gnd-00A-18 — 26.1_Front_Lighting:0 D
gnd-00A-18 — 12.1_Brake:2 B
gnd-00A-18 — 36.1_WCL_Ricon:6 E
gnd-00A-18 — 26.1_Front_Lighting:0 A
gnd-00A-18 — 26.5_Fog_Corn_Dock_Lts:1 B
gnd-00A-18 — 26.1_Front_Lighting:1 E
gnd-00A-18 — 6.2_Network:4 C
gnd-00A-18 — 16.2_ACC_LDW:3 A

gnd-00A1-16 — C71:4
gnd-00A-14 — C71:5

Lh console harness

C171:16
gnd-00A-16 — 9.1_Horn:1 D
gnd-00A-18 — 12.2_Trailler_ParkBrake:2 B
gnd-00A-18 — 14.1_Engine_Ecu:8 C
gnd-00A-18 — 26.3_Backup_Warnings:1 C
gnd-00A-18 — 32.1_Level_low:1 E
gnd-00A-18 — 33.1_Luggage_LockUnlock:1 B
gnd-00A-18 — 31.1_Mirror:1 A
gnd-00A-18 — 30.1_Drivers_Window:1 B
gnd-00A-18 — 32.1_Level_low:1 D

Front harness

gnd-00FH-14
gnd-00FH-18 — 29.1_Entrance_door_Keyless:2 A
gnd-00FH-16 — 32.1_Level_low:3 D
gnd-00FH-16 — 9.1_Horn:3 C
gnd-00FH-18 — 34.1_wiper_washer:1 B
gnd-00FH-18 — 12.1_Brake:2 D
gnd-00FH-18 — 18.1_Defroster:0 B
gnd-00FH1-12 — 18.1_Defroster:2 B
gnd-00FH2-10 — 7.1_Mux_Power:2 B
gnd-00FH2-10 — 7.1_Mux_Power:2 C

FJB harness

1/4
gnd-00F1-12 — 7.1_Mux_Power:1 D
gnd-00F1-12 — 7.1_Mux_Power:1 C
gnd-00F2-12 — 7.1_Mux_Power:1 D
gnd-00F2-12 — 7.1_Mux_Power:1 E

1/4
gnd-00F3-16 — 7.1_Mux_Power:1 B
gnd-00F4-18 — 21.1_Converter_interface:2 B
gnd-00F5-12 — 26.4_Trailer:1 A

FJB Electronic GND

1/4
gnd-00F-12
gnd-00F-18 — 12.2_Trailler_ParkBrake:2 B
gnd-00F-18 — 14.1_Engine_Ecu:5 C
gnd-00F-18 — 42.4_ELD_ITS_Gateway:5 C
gnd-00F-14 — 16.1_ESP:2 B
gnd-00F-18 — 30.2_Outlet_12v:1 B
gnd-00F-18 — 4.1_Dist_12V_FJB:2 C
gnd-00F-18 — 37.2_Power_SteeringCtrl:1 B
gnd-00F-18 — 38.1_Fire_Supp:0 C
gnd-00F-18 — 38.1_Fire_Supp:2 C
gnd-00F-18 — 4.1_Dist_12V_FJB:4 A
gnd-00F-18 — 4.1_Dist_12V_FJB:4 B
gnd-00F-18 — 9.1_Horn:1 B

gnd-00FR-1

RJB harness

1/4
gnd-00R1-10
gnd-00R1-18 — 27.1_Window_Ajar:0 D
gnd-00R1-18 — 3.1_Main_Disti:2 A
gnd-00R1-18 — 6.2_Network:1 B
gnd-00R1-14 — 15.1_Trans_Allison:0 A
gnd-00R1-16 — 38.1_Fire_Supp:2 C
gnd-00R1-18 — 12.1_Brake:2 C
gnd-00R1-18 — 33.2_LuggageLockSw:1 B
gnd-00R1-18 — 3.2_Ign_Start:1 C
gnd-00R1-18 — 14.1_Engine_Ecu:3 A

1/4
gnd-00R6-10 — C17:55
gnd-00R2-12 — C17:2
gnd-00R6-10 — 7.1_Mux_Power:2 D
gnd-00R2-12 — 7.1_Mux_Power:2 D
gnd-00R3-12 — 7.1_Mux_Power:4 D
gnd-00R3-12 — 7.1_Mux_Power:4 C

RJB Electronic GND

gnd-00R4-12 — 7.1_Mux_Power:4 D
gnd-00R4-12 — 7.1_Mux_Power:4 E
1/4
gnd-00R4-16 — C17:92
gnd-00R4-16 — 7.1_Mux_Power:4 B
gnd-00R5-8 — 1.1_batteries:0 B
gnd-00R5-12 — 14.1_Engine_Ecu:3 C
gnd-00R5-14 — 14.2_Urea:1 B
gnd-00R5-18 — 26.4_Trailer:1 E

1/4
gnd-00VA-2 — 1.1_batteries:0 C

gnd-_00-1/0 — 1.1_batteries:2 B

Dash JB

AE55 I/O_EA, 12WUP
J1:6 / J1:18 — gnd-A55RJ1.6-18 — 16.2_ACC_LDW:4 C
gnd-A55RJ1.18-18 — 41.1_Steering:2 B
J2:14

AE56 I/O_EA, 24WUP
J1:6 / J1:18 / J2:14

FJB

AE41 I/O_EA, 24VD
J1:6 / J1:18 — gnd-A41RJ1.6-18 — 29.1_Entrance_door_Keyless:4 A
gnd-A41RJ1.18-18 — 29.1_Entrance_door_Keyless:4 D
J2:14 — gnd-A41RJ2.14-18 — 21.1_Converter_interface:4 A

AE42 I/O_EA, 24WUP
J1:6 / J1:18 — gnd-A42J1.18-16 — 21.1_Converter_interface:4 B
J2:14

AE43 I/O_EB, 12VD
J1:5 / J1:6 / J1:17 — gnd-A43RJ1.17-18 — 39.1_TPMS_ACB:0 A
16.2_ACC_LDW:2 D
J1:18
J2:2 / J2:3 / J2:14

AE44 I/O_EB, 24WUP
J1:5 / J1:6 / J1:17 — gnd-A44RJ1.17-18 — 26.1_Front_Lighting:4 E
9.1_Horn:3 D
J1:18
J2:2 / J2:3 — gnd-A44RJ2.2-18 / gnd-A44RJ2.3-16 — 19.1_Driver_Lights:3 A
34.1_wiper_washer:4 C
J2:14

AE45 I/O_EB, 12WUP
J1:5 / J1:6 / J1:17 — gnd-A45RJ1.17-16 — 26.5_Fog_Corn_Dock_Lts:3 B
J1:18
J2:2 / J2:3 / J2:14

AE46 I/O_EB, 12WUp
J1:5 / J1:6 / J1:17 — gnd-A46RJ1.17-14 — 26.1_Front_Lighting:3 B
J1:18 — gnd-A46RJ1.18-18 — 26.1_Front_Lighting:4 C
J2:2 / J2:3 / J2:14

RH console JB

AE47 I/O_EB, 24WUP
J1:5 / J1:6 — gnd-A47RJ1.6-18 — 18.3_Small_AC:2 B
18.1_Defroster:2 A
J1:17 — gnd-A47RJ1.17-18 — 18.1_Defroster:4 C
J1:18 — gnd-A47RJ1.18-18 — 34.1_wiper_washer:3 C
J2:2 / J2:3 — gnd-A47RJ2.3-14 — 18.3_Small_AC:4 B
J2:14

AE48 I/O_EB, 12WUp
J1:5 / J1:6 / J1:17 — gnd-A48RJ1.17-18 — 26.5_Fog_Corn_Dock_Lts:3 C
J1:18 — gnd-A48RJ1.18-18 — 26.1_Front_Lighting:4 B
J2:2 — gnd-A48RJ2.2-14 — 26.1_Front_Lighting:3 A
J2:3 / J2:14

Evaporator

AE54 I/O_EB, 24WUp
J1:5 / J1:6 — gnd-A54RJ1.6-18 — 18.2_Full_AC:0 D
18.2_Full_AC:0 B
J1:17 — gnd-A54RJ1.17-16 — 18.2_Full_AC:4 C
J1:18 — gnd-A54RJ1.18-18 — 18.2_Full_AC:1 A
J2:2 — gnd-A54RJ2.2-16 — 18.2_Full_AC:4 D
J2:3 — gnd-A54RJ2.3-16 — 18.2_Full_AC:3 C
J2:14 — gnd-A54RJ2.14-14 — 18.2_Full_AC:2 C

Slide out front left

AE58 I/O_EB, 24WUp
J1:5 / J1:6 / J1:17 — gnd-A58RJ1.17-14 — 20.1_SlideOut1:2 B
J1:18
J2:2 — gnd-A58RJ2.2-18 — 20.1_SlideOut1:3 B
J2:3 / J2:14

Slide out rear left

AE59 I/O_EB, 24WUp
J1:5 / J1:6 / J1:17 — gnd-A59RJ1.17-14 — 20.2_SlideOut2:3 B
J1:18
J2:2 — gnd-A59RJ2.2-18 — 20.2_SlideOut2:4 B
J2:3 / J2:14

RJB

AE49 I/O_EB, 24WUP
J1:5 / J1:6 — gnd-A49RJ1.6-18 — 18.3_Small_AC:2 D
J1:17 — gnd-A49J1.18-18 — 18.3_Small_AC:5 D
J1:18 — gnd-A49RJ1.18-18 — 18.2_Full_AC:4 D
J2:2 — gnd-A49RJ2.2-18 — 13.1_FanDriveElectric:1 D
J2:3 — gnd-A49RJ2.3-18 — 18.3_Small_AC:2 D
J2:14

AE50 I/O_EB, 12WUP
J1:5 / J1:6 / J1:17 — gnd-A50RJ1.17-18 — 26.2_Rear_lighting:2 D
J1:18 — gnd-A50RJ1.18-18 — 26.2_Rear_lighting:3 B
J2:2 — gnd-A50RJ2.2-18 — 26.3_Backup_Warnings:3 B
J2:3 — gnd-A50RJ2.3-18 — 37.1_VLink_ADryer:2 D
J2:14

AE51 I/O_EB, 12WUp
J1:5 / J1:6 / J1:17 — gnd-A51RJ1.17-18 — 26.2_Rear_lighting:2 C
J1:18 — gnd-A51RJ1.18-14 — 26.5_Fog_Corn_Dock_Lts:3 E
36.1_WCL_Ricon:4 F
J2:2 / J2:3 / J2:14

AE52 I/O_EB, 24WUP
J1:5 / J1:6 / J1:17 — gnd-A52RJ1.17-18 — 1.1_batteries:1 D
J1:18 — gnd-A52RJ1.18-18 — 25.1_Cmpt_Lighting:4 B
J2:2 / J2:3 / J2:14

WCL

AE57 I/O_EA, 24WUp
J1:6 / J1:18 — gnd-A57RJ1.18-18 — 36.1_WCL_Ricon:6 B
J2:14

Electronic ground distribution

Ground distribution:
0-Electric gnd
00- Electronic Gnd

A-Dash - Lh console harness
F-Front junction box harness
FH-Front harness
R-Rear junction box harness
FR-Front to rear

Dash harness

gnd-00A1-16
- 7.1_Mux_Power:4 B
- 41.1_Steering:3 B
- 34.1_wiper_washer:1 C
- 29.1_Entrance_door_Keyless:0 C
- 29.1_Entrance_door_Keyless:0 A
- 41.1_Steering:1 D
- 19.1_Driver_Lights:1 E
- 30.1_Drivers_Window:1 D
- 19.1_Driver_Lights:1 C
- 16.1_ESP:0 A
- 10.1_Cluster:3 B

gnd-00A-18
- 14.1_Engine_Ecu:8 D
- 26.1_Front_Lighting:0 D
- 12.1_Brake:2 B

gnd-00A-18
- 36.1_WCL_Ricon:6 E
- 26.1_Front_Lighting:0 A
- 26.5_Fog_Corn_Dock_Lts:1 B
- 26.1_Front_Lighting:1 E
- 6.2_Network:4 C

gnd-00A-18
- 16.2_ACC_LDW:3 A
- 31.2_Electronic_Mirrors:2 B

gnd-00A1-16 — C71:4
gnd-00A-14 — C71:5

Lh console harness

C171:16
- gnd-00A-16: 9.1_Horn:1 D
- gnd-00A-18: 12.2_Trailler_ParkBrake:2 B
- gnd-00A-18: 14.1_Engine_Ecu:8 C
- gnd-00A-18: 26.3_Backup_Warnings:1 C
- gnd-00A-18: 32.1_Level_low:1 E
- gnd-00A-18: 33.1_Luggage_LockUnlock:1 B
- gnd-00A-18: 31.1_Mirror:1 A
- gnd-00A-18: 30.1_Drivers_Window:1 B
- gnd-00A-18: 32.1_Level_low:1 D

Front harness

gnd-00FH-14
- gnd-00FH-18: 29.1_Entrance_door_Keyless:2 A
- gnd-00FH-16: 32.1_Level_low:3 D
- gnd-00FH-16: 9.1_Horn:3 C
- gnd-00FH-18: 34.1_wiper_washer:1 B
- gnd-00FH-18: 12.1_Brake:2 D
- gnd-00FH-18: 18.1_Defroster:0 B
- gnd-00FH1-12: 18.1_Defroster:2 B
- gnd-00FH2-10: 7.1_Mux_Power:2 B
- gnd-00FH2-10: 7.1_Mux_Power:2 C

FJB harness

1/4
- gnd-00F1-12: 7.1_Mux_Power:1 D
- gnd-00F1-12: 7.1_Mux_Power:1 C
- gnd-00F2-12: 7.1_Mux_Power:1 D
- gnd-00F2-12: 7.1_Mux_Power:1 E

1/4
- gnd-00F3-16: 7.1_Mux_Power:1 B
- gnd-00F4-18: 21.1_Converter_interface:2 B
- gnd-00F5-12: 26.4_Trailer:1 A
- gnd-00F-18: 12.2_Trailler_ParkBrake:2 B
- gnd-00F-18: 14.1_Engine_Ecu:5 C

FJB Electronic GND

1/4 — gnd-00F-12
- gnd-00F-18: 42.4_ELD_ITS_Gateway:5 C
- gnd-00F-14: 16.1_ESP:2 B
- gnd-00F-18: 30.2_Outlet_12v:1 B
- gnd-00F-18: 4.1_Dist_12V_FJB:2 C
- gnd-00F-18: 37.2_Power_SteeringCtrl:1 B
- gnd-00F-18: 38.1_Fire_Supp:0 C
- gnd-00F-18: 38.1_Fire_Supp:2 C
- gnd-00F-18: 4.1_Dist_12V_FJB:4 A
- gnd-00F-18: 4.1_Dist_12V_FJB:4 B
- gnd-00F-18: 9.1_Horn:1 B

gnd-00FR-1

RJB harness

1/4 — gnd-00R1-10
- gnd-00R1-18: 27.1_Window_Ajar:0 D
- gnd-00R1-18: 3.1_Main_Disti:2 A
- gnd-00R1-18: 6.2_Network:1 B
- gnd-00R1-14: 15.1_Trans_Allison:0 A
- gnd-00R1-16: 38.1_Fire_Supp:2 C
- gnd-00R1-18: 12.1_Brake:2 C
- gnd-00R1-18: 33.2_LuggageLockSw:1 B
- gnd-00R1-18: 3.2_Ign_Start:1 C
- gnd-00R1-18: 14.1_Engine_Ecu:3 A

1/4
- gnd-00R6-10 — C17:55 — gnd-00R6-10: 7.1_Mux_Power:2 D
- gnd-00R2-12 — C17:2 — gnd-00R2-12: 7.1_Mux_Power:2 D
- gnd-00R3-12: 7.1_Mux_Power:4 D
- gnd-00R3-12: 7.1_Mux_Power:4 C

1/4
- gnd-00R4-12: 7.1_Mux_Power:4 D
- gnd-00R4-12: 7.1_Mux_Power:4 E
- gnd-00R4-16 — C17:92 — gnd-00R4-16: 7.1_Mux_Power:4 B
- gnd-00R5-8 — gnd-00R5-14: 1.1_batteries:0 B
- gnd-00R5-12: 14.1_Engine_Ecu:3 C
- gnd-00R5-14: 14.2_Urea:1 B
- gnd-00R5-18: 26.4_Trailer:1 E

1/4
- gnd-00VA-2: 1.1_batteries:0 C

RJB Electronic GND

gnd-_00-1/0: 1.1_batteries:2 B

Dash JB

AE55 (I/O_EA, 12WUP)
- J1:6 / J1:18: gnd-A55RJ1.6-18 — 16.2_ACC_LDW:4 C
- J2:14

AE56 (I/O_EA, 24WUP)
- J1:6 / J1:18
- J2:14

FJB

AE41 (I/O_EA, 24VD)
- J1:6 / J1:18: gnd-A41RJ1.6-18 — 29.1_Entrance_door_Keyless:4 A; gnd-A41RJ1.18-18 — 29.1_Entrance_door_Keyless:4 D
- J2:14: gnd-A41RJ2.14-18 — 21.1_Converter_interface:4 A

AE42 (I/O_EA, 24WUP)
- J1:6 / J1:18: gnd-A42J1.18-16 — 21.1_Converter_interface:4 B
- J2:14

AE43 (I/O_EB, 12VD)
- J1:5 / J1:6 / J1:17 / J1:18: gnd-A43RJ1.17-18 — 39.1_TPMS_ACB:0 B; 16.2_ACC_LDW:2 D
- J2:2 / J2:3 / J2:14

AE44 (I/O_EB, 24WUP)
- J1:5 / J1:6 / J1:17 / J1:18: gnd-A44RJ1.17-18 — 26.1_Front_Lighting:4 E; 9.1_Horn:3 D
- J2:2 / J2:3 / J2:14: gnd-A44RJ2.2-18 — 19.1_Driver_Lights:3 A; gnd-A44RJ2.3-16 — 34.1_wiper_washer:4 C; 31.2_Electronic_Mirrors:2 E

AE45 (I/O_EB, 12WUP)
- J1:5 / J1:6 / J1:17 / J1:18: gnd-A45RJ1.17-16 — 26.5_Fog_Corn_Dock_Lts:3 B
- J2:2 / J2:3 / J2:14

AE46 (I/O_EB, 12WUp)
- J1:5 / J1:6 / J1:17 / J1:18: gnd-A46RJ1.17-14 — 26.1_Front_Lighting:3 B; gnd-A46RJ1.18-18 — 26.1_Front_Lighting:4 C
- J2:2 / J2:3 / J2:14

RH console JB

AE47 (I/O_EB, 24WUP)
- J1:5 / J1:6 / J1:17 / J1:18: gnd-A47RJ1.6-18 — 18.3_Small_AC:2 B; 18.1_Defroster:2 A; gnd-A47RJ1.17-18 — 18.1_Defroster:4 C; gnd-A47RJ1.18-18 — 34.1_wiper_washer:3 C
- J2:2 / J2:3 / J2:14: gnd-A47RJ2.3-14 — 18.3_Small_AC:4 B

AE48 (I/O_EB, 12WUp)
- J1:5 / J1:6 / J1:17 / J1:18: gnd-A48RJ1.17-18 — 26.5_Fog_Corn_Dock_Lts:3 C; gnd-A48RJ1.18-18 — 26.1_Front_Lighting:4 B
- J2:2 / J2:3 / J2:14: gnd-A48RJ2.2-14 — 26.1_Front_Lighting:3 A

Evaporator

AE54 (I/O_EB, 24WUp)
- J1:5 / J1:6 / J1:17 / J1:18: gnd-A54RJ1.6-18 — 18.2_Full_AC:0 D; 18.2_Full_AC:0 B; gnd-A54RJ1.17-16 — 18.2_Full_AC:4 C; gnd-A54RJ1.18-18 — 18.2_Full_AC:1 A
- J2:2 / J2:3 / J2:14: gnd-A54RJ2.2-16 — 18.2_Full_AC:4 D; gnd-A54RJ2.3-16 — 18.2_Full_AC:3 C; gnd-A54RJ2.14-14 — 18.2_Full_AC:2 C

Slide out front left

AE58 (I/O_EB, 24WUp)
- J1:5 / J1:6 / J1:17 / J1:18: gnd-A58RJ1.17-14 — 20.1_SlideOut1:2 B
- J2:2 / J2:3 / J2:14: gnd-A58RJ2.2-18 — 20.1_SlideOut1:3 B

Slide out rear left

AE59 (I/O_EB, 24WUp)
- J1:5 / J1:6 / J1:17 / J1:18: gnd-A59RJ1.17-14 — 20.2_SlideOut2:3 B
- J2:2 / J2:3 / J2:14: gnd-A59RJ2.2-18 — 20.2_SlideOut2:4 B

RJB

AE49 (I/O_EB, 24WUP)
- J1:5 / J1:6 / J1:17 / J1:18: gnd-A49RJ1.6-18 — 18.3_Small_AC:2 D; gnd-A49J1.18-18 — 18.3_Small_AC:5 D; gnd-A49RJ1.18-18 — 18.2_Full_AC:4 D
- J2:2 / J2:3 / J2:14: gnd-A49RJ2.2-18 — 13.1_FanDriveElectric:1 D; gnd-A49RJ2.3-18 — 18.3_Small_AC:2 D

AE50 (I/O_EB, 12WUP)
- J1:5 / J1:6 / J1:17 / J1:18: gnd-A50RJ1.17-18 — 26.2_Rear_lighting:2 D; gnd-A50RJ1.18-18 — 26.2_Rear_lighting:3 B
- J2:2 / J2:3 / J2:14: gnd-A50RJ2.2-18 — 26.3_Backup_Warnings:3 B; gnd-A50RJ2.3-18 — 37.1_VLink_ADryer:2 D

AE51 (I/O_EB, 12WUp)
- J1:5 / J1:6 / J1:17 / J1:18: gnd-A51RJ1.17-18 — 26.2_Rear_lighting:2 C; gnd-A51RJ1.18-14 — 26.5_Fog_Corn_Dock_Lts:3 E; 36.1_WCL_Ricon:4 F
- J2:2 / J2:3 / J2:14

AE52 (I/O_EB, 24WUP)
- J1:5 / J1:6 / J1:17 / J1:18: gnd-A52RJ1.17-18 — 1.1_batteries:1 D; gnd-A52RJ1.18-18 — 25.1_Cmpt_Lighting:4 B
- J2:2 / J2:3 / J2:14

WCL

AE57 (I/O_EA, 24WUp)
- J1:6 / J1:18: gnd-A57RJ1.18-18 — 36.1_WCL_Ricon:6 B
- J2:14

Electronic ground distribution

Ground distribution:
0-Electric gnd
00- Electronic Gnd

A-Dash - Lh console harness
F-Front junction box harness
FH-Front harness
R-Rear junction box harness
FR-Front to rear

Dash harness

gnd−00A1−16 — 7.1_Mux_Power:4 B
gnd−00A−18 — 34.1_wiper_washer:1 C
gnd−00A−18 — 29.1_Entrance_door_Keyless:0 C
gnd−00A−18 — 29.1_Entrance_door_Keyless:0 A
gnd−00A−18 — 41.1_Steering:1 D
gnd−00A−18 — 19.1_Driver_Lights:1 E
gnd−00A−18 — 30.1_Drivers_Window:1 D
gnd−00A−18 — 25.1_Cmpt_Lighting:0 E
gnd−00A−18 — 16.1_ESP:0 A
gnd−00A−18 — 10.1_Cluster:4 C
gnd−00A−18 — 14.1_Engine_Ecu:8 D
gnd−00A−18 — 26.1_Front_Lighting:0 D
gnd−00A−18 — 12.1_Brake:2 B
gnd−00A−18 — 26.1_Front_Lighting:0 A
gnd−00A−18 — 26.5_Fog_Corn_Dock_Lts:1 B
gnd−00A−18 — 26.1_Front_Lighting:1 E
gnd−00A−18 — 6.2_Network:4 C

gnd−00A1−16 — C71:4
gnd−00A−14 — C71:5

Lh console harness

C171:16
gnd−00A−16 — 9.1_Horn:1 D
gnd−00A−18 — 12.2_Trailler_ParkBrake:2 B
gnd−00A−18 — 14.1_Engine_Ecu:8 C
gnd−00A−18 — 26.3_Backup_Warnings:1 C
gnd−00A−18 — 32.1_Level_low:1 E
gnd−00A−18 — 33.1_Luggage_LockUnlock:1 B
gnd−00A−18 — 31.1_Mirror:1 A
gnd−00A−18 — 30.1_Drivers_Window:1 B
gnd−00A−18 — 32.1_Level_low:1 D

Front harness

gnd−00FH−14
gnd−00FH−18 — 29.1_Entrance_door_Keyless:2 A
gnd−00FH−16 — 32.1_Level_low:3 D
gnd−00FH−16 — 9.1_Horn:3 C
gnd−00FH−18 — 34.1_wiper_washer:1 B
gnd−00FH−18 — 12.1_Brake:2 D
gnd−00FH−18 — 18.1_Defroster:0 B
gnd−00FH1−12 — 18.1_Defroster:2 B
gnd−00FH2−10 — 7.1_Mux_Power:2 B
gnd−00FH2−10 — 7.1_Mux_Power:2 C

1/4

FJB harness

gnd−00F1−12 — 7.1_Mux_Power:1 D
gnd−00F1−12 — 7.1_Mux_Power:1 C
gnd−00F2−12 — 7.1_Mux_Power:1 D
gnd−00F2−12 — 7.1_Mux_Power:1 E
gnd−00F3−16 — 7.1_Mux_Power:1 B
gnd−00F4−18 — 21.1_Converter_interface:2 B

FJB
Electronic GND

gnd−00F−12
gnd−00F−18 — 12.2_Trailler_ParkBrake:2 B
gnd−00F−18 — 14.1_Engine_Ecu:5 C
gnd−00F−14 — 16.1_ESP:2 B
gnd−00F−18 — 30.2_Outlet_12v:1 B
gnd−00F−18 — 4.1_Dist_12V_FJB:2 C
gnd−00F−18 — 37.2_Power_SteeringCtrl:1 B
gnd−00F−18 — 38.1_Fire_Supp:0 C
gnd−00F−18 — 38.1_Fire_Supp:2 C
gnd−00F−18 — 4.1_Dist_12V_FJB:4 A
gnd−00F−18 — 4.1_Dist_12V_FJB:4 B
gnd−00F−18 — 9.1_Horn:1 B

gnd−00FR−6

RJB harness

gnd−00R1−10
gnd−00R1−18 — 27.1_Window_Ajar:0 D
gnd−00R1−18 — 3.1_Main_Disti:1 A
gnd−00R1−18 — 6.2_Network:1 B
gnd−00R1−14 — 15.1_Trans_Allison:0 A
gnd−00R1−16 — 38.1_Fire_Supp:2 C
gnd−00R1−18 — 12.1_Brake:2 C
gnd−00R1−18 — 33.2_LuggageLockSw:1 B

RJB
Electronic GND

gnd−00R6−10 — C17:55 — gnd−00R6−10 — 7.1_Mux_Power:2 D
gnd−00R2−12 — C17:2 — gnd−00R2−12 — 7.1_Mux_Power:2 D
gnd−00R3−12 — 7.1_Mux_Power:4 D
gnd−00R3−12 — 7.1_Mux_Power:4 C
gnd−00R4−12 — 7.1_Mux_Power:4 D
gnd−00R4−12 — 7.1_Mux_Power:4 E
gnd−00R5−8
gnd−00R5−14 — 1.1_batteries:0 B
gnd−00R5−12 — 14.1_Engine_Ecu:3 C
gnd−00R5−14 — 14.2_Urea:1 B
gnd−00R5−18 — 26.4_Trailer:1 D

gnd−00VA−2 — 1.1_batteries:0 C
gnd−00−1/0 — 1.1_batteries:2 B

Dash JB

AE55 I/O_EA, 12WUP
J1:6 — Gnd_Ana_1
J1:18 — Gnd_I/O_2 — gnd−A55RJ1.18−18 — 41.1_Steering:2 B
J2:14

AE56 I/O_EA, 24WUP
J1:6 — Gnd_Ana_1
J1:18 — Gnd_I/O_2
J2:14

FJB

AE41 I/O_EA, 24VD
J1:6 — Gnd_Ana_1 — gnd−A41RJ1.6−18 — 29.1_Entrance_door_Keyless:4 A
J1:18 — Gnd_I/O_2 — gnd−A41RJ1.18−18 — 29.1_Entrance_door_Keyless:4 D
J2:14 — gnd−A41RJ2.14−18 — 21.1_Converter_interface:4 A

AE42 I/O_EA, 24WUP
J1:6 — Gnd_Ana_1
J1:18 — Gnd_I/O_2 — gnd−A42J1.18−16 — 21.1_Converter_interface:4 B
J2:14

AE43 I/O_EB, 12VD
J1:6 — Gnd_Ana_1
J1:17 — Gnd_I/O_2 — gnd−A43RJ1.17−18 — 39.1_TPMS_ACB:0 A
J1:18 — Gnd_I/O_3 — 39.1_TPMS_ACB:2 D
Gnd_I/O_4
J2:2
J2:3
J2:14

AE44 I/O_EB, 24WUP
J1:6 — Gnd_Ana_1
J1:17 — Gnd_I/O_2 — gnd−A44RJ1.17−18 — 26.1_Front_Lighting:4 E
J1:18 — Gnd_I/O_3 — 9.1_Horn:3 D
Gnd_I/O_4
J2:2 — gnd−A44RJ2.2−18 — 19.1_Driver_Lights:3 A
J2:3 — gnd−A44RJ2.3−16 — 34.1_wiper_washer:4 C
J2:14

AE45 I/O_EB, 12WUP
J1:6 — Gnd_Ana_1
J1:17 — Gnd_I/O_2 — gnd−A45RJ1.17−16 — 26.5_Fog_Corn_Dock_Lts:3 B
J1:18 — Gnd_I/O_3
Gnd_I/O_4
J2:2
J2:3
J2:14

AE46 I/O_EB, 12WUp
J1:6 — Gnd_Ana_1
J1:17 — Gnd_I/O_2 — gnd−A46RJ1.17−14 — 26.1_Front_Lighting:3 C
J1:18 — Gnd_I/O_3 — gnd−A46RJ1.18−18 — 26.1_Front_Lighting:4 D
Gnd_I/O_4
J2:2
J2:3
J2:14

RH console JB

AE47 I/O_EB, 24WUP
J1:6 — Gnd_Ana_1 — gnd−A47RJ1.6−18 — 18.3_Small_AC:2 B
J1:17 — Gnd_I/O_2 — gnd−A47RJ1.17−18 — 18.1_Defroster:2 A
J1:18 — Gnd_I/O_3 — gnd−A47RJ1.18−18 — 18.1_Defroster:4 C
Gnd_I/O_4 — 34.1_wiper_washer:3 C
J2:2
J2:3 — gnd−A47RJ2.3−14 — 18.3_Small_AC:4 B
J2:14

AE48 I/O_EB, 12WUp
J1:6 — Gnd_Ana_1
J1:17 — Gnd_I/O_2 — gnd−A48RJ1.17−18 — 26.5_Fog_Corn_Dock_Lts:3 C
J1:18 — Gnd_I/O_3 — gnd−A48RJ1.18−18 — 26.1_Front_Lighting:4 B
Gnd_I/O_4
J2:2 — gnd−A48RJ2.2−14 — 26.1_Front_Lighting:3 A
J2:3
J2:14

Evaporator

AE54 I/O_EB, 24WUp
J1:6 — Gnd_Ana_1 — gnd−A54RJ1.6−18 — 18.2_Full_AC:0 D
J1:17 — Gnd_I/O_2 — gnd−A54RJ1.17−16 — 18.2_Full_AC:0 B
J1:18 — Gnd_I/O_3 — gnd−A54RJ1.18−18 — 18.2_Full_AC:4 C
18.2_Full_AC:1 A
Gnd_I/O_4
J2:2 — gnd−A54RJ2.2−16 — 18.2_Full_AC:4 D
J2:3 — gnd−A54RJ2.3−16 — 18.2_Full_AC:3 C
J2:14

Slide out front left

AE58 I/O_EB, 24WUp
J1:6 — Gnd_Ana_1
J1:17 — Gnd_I/O_2 — gnd−A58RJ1.17−14 — 20.1_SlideOut1:2 B
J1:18 — Gnd_I/O_3
Gnd_I/O_4
J2:2 — gnd−A58RJ2.2−18 — 20.1_SlideOut1:3 B
J2:3
J2:14

Slide out rear left

AE59 I/O_EB, 24WUp
J1:6 — Gnd_Ana_1
J1:17 — Gnd_I/O_2 — gnd−A59RJ1.17−14 — 20.2_SlideOut2:3 B
J1:18 — Gnd_I/O_3
Gnd_I/O_4
J2:2 — gnd−A59RJ2.2−18 — 20.2_SlideOut2:4 B
J2:3
J2:14

RJB

AE49 I/O_EB, 24WUP
J1:6 — Gnd_Ana_1 — gnd−A49RJ1.6−18 — 18.3_Small_AC:2 D
J1:17 — Gnd_I/O_2 — gnd−A49J1.18−18 — 18.3_Small_AC:5 D
J1:18 — Gnd_I/O_3 — gnd−A49RJ1.18−18 — 18.2_Full_AC:4 D
Gnd_I/O_4
J2:2 — gnd−A49RJ2.2−18 — 13.1_FanDriveElectric:1 D
J2:3 — gnd−A49RJ2.3−18 — 18.3_Small_AC:2 D
J2:14

AE50 I/O_EB, 12WUP
J1:6 — Gnd_Ana_1
J1:17 — Gnd_I/O_2 — gnd−A50RJ1.17−18 — 26.2_Rear_lighting:2 F
J1:18 — Gnd_I/O_3 — gnd−A50RJ1.18−18 — 26.2_Rear_lighting:2 B
Gnd_I/O_4
J2:2 — gnd−A50RJ2.2−18 — 26.3_Backup_Warnings:3 B
J2:3 — gnd−A50RJ2.3−18 — 37.1_VLink_ADryer:2 D
J2:14

AE51 I/O_EB, 12WUp
J1:6 — Gnd_Ana_1
J1:17 — Gnd_I/O_2 — gnd−A51RJ1.17−18 — 26.2_Rear_lighting:2 D
J1:18 — Gnd_I/O_3 — gnd−A51RJ1.18−16 — 26.5_Fog_Corn_Dock_Lts:3 E
Gnd_I/O_4
J2:2
J2:3
Gnd_I/O_5
J2:14

AE52 I/O_EB, 24WUP
J1:6 — Gnd_Ana_1
J1:17 — Gnd_I/O_2 — gnd−A52RJ1.17−18 — 1.1_batteries:1 D
J1:18 — Gnd_I/O_3 — gnd−A52RJ1.18−18 — 25.1_Cmpt_Lighting:4 B
Gnd_I/O_4
J2:2
Gnd_I/O_5
J2:3 — gnd−A52RJ2.3−18 — 3.2_Ign_Start:1 C
J2:14

Electronic ground distribution

Ground distribution:
0-Electric gnd
00- Electronic Gnd

A-Dash - Lh console harness
F-Front junction box harness
FH-Front harness
R-Rear junction box harness
FR-Front to rear

Dash harness

gnd−00A1−16 — 7.1_Mux_Power:4 B
gnd−00A−18 — 34.1_wiper_washer:1 C
gnd−00A−18 — 29.1_Entrance_door_Keyless:0 C
gnd−00A−18 — 29.1_Entrance_door_Keyless:0 A
gnd−00A−18 — 41.1_Steering:1 D
gnd−00A−18 — 19.1_Driver_Lights:1 E
gnd−00A−18 — 30.1_Drivers_Window:1 D
gnd−00A−18 — 25.1_Cmpt_Lighting:0 E
gnd−00A−18 — 16.1_ESP:0 A
gnd−00A−18 — 10.1_Cluster:4 C
gnd−00A−18 — 14.1_Engine_Ecu:8 D
gnd−00A−18 — 26.1_Front_Lighting:0 D
gnd−00A−18 — 12.1_Brake:2 B
gnd−00A−18 — 26.1_Front_Lighting:0 A
gnd−00A−18 — 26.5_Fog_Corn_Dock_Lts:1 B
gnd−00A−18 — 26.1_Front_Lighting:1 E
gnd−00A−18 — 6.2_Network:4 C

gnd−00A1−16 — C71:4
gnd−00A−14 — C71:5

Lh console harness

C171:16
gnd−00A−16 — 9.1_Horn:1 D
gnd−00A−18 — 12.2_Trailler_ParkBrake:2 B
gnd−00A−18 — 14.1_Engine_Ecu:8 C
gnd−00A−18 — 26.3_Backup_Warnings:1 C
gnd−00A−18 — 32.1_Level_low:1 E
gnd−00A−18 — 33.1_Luggage_LockUnlock:1 B
gnd−00A−18 — 31.1_Mirror:1 A
gnd−00A−18 — 30.1_Drivers_Window:1 B
gnd−00A−18 — 32.1_Level_low:1 D

Front harness

gnd−00FH−14
gnd−00FH−18 — 29.1_Entrance_door_Keyless:2 A
gnd−00FH−16 — 32.1_Level_low:3 D
gnd−00FH−16 — 9.1_Horn:3 C
gnd−00FH−18 — 34.1_wiper_washer:1 B
gnd−00FH−18 — 12.1_Brake:2 D
gnd−00FH−18 — 18.1_Defroster:0 B
gnd−00FH1−12 — 18.1_Defroster:2 B
gnd−00FH2−10 — 7.1_Mux_Power:2 B
gnd−00FH2−10 — 7.1_Mux_Power:2 C

1/4

FJB harness

gnd−00F1−12 — 7.1_Mux_Power:1 D
gnd−00F1−12 — 7.1_Mux_Power:1 C
gnd−00F2−12 — 7.1_Mux_Power:1 D
gnd−00F2−12 — 7.1_Mux_Power:1 E
gnd−00F3−16 — 7.1_Mux_Power:1 B
gnd−00F4−18 — 21.1_Converter_interface:2 B

FJB
Electronic GND

gnd−00F−12
gnd−00F−18 — 12.2_Trailler_ParkBrake:2 B
gnd−00F−18 — 14.1_Engine_Ecu:5 C
gnd−00F−14 — 16.1_ESP:2 B
gnd−00F−18 — 30.2_Outlet_12v:1 B
gnd−00F−18 — 4.1_Dist_12V_FJB:2 C
gnd−00F−18 — 37.2_Power_SteeringCtrl:1 B
gnd−00F−18 — 38.1_Fire_Supp:0 C
gnd−00F−18 — 38.1_Fire_Supp:2 C
gnd−00F−18 — 4.1_Dist_12V_FJB:4 A
gnd−00F−18 — 4.1_Dist_12V_FJB:4 B
gnd−00F−18 — 9.1_Horn:1 B

gnd−00FR−6

RJB harness

gnd−00R1−10
gnd−00R1−18 — 27.1_Window_Ajar:0 D
gnd−00R1−18 — 3.1_Main_Disti:1 A
gnd−00R1−18 — 6.2_Network:1 B
gnd−00R1−14 — 15.1_Trans_Allison:0 A
gnd−00R1−16 — 38.1_Fire_Supp:2 C
gnd−00R1−18 — 12.1_Brake:2 C
gnd−00R1−18 — 33.2_LuggageLockSw:1 B

gnd−00R6−10 — C17:55 — gnd−00R6−10 — 7.1_Mux_Power:2 D
gnd−00R2−12 — C17:2 — gnd−00R2−12 — 7.1_Mux_Power:2 D
gnd−00R3−12 — 7.1_Mux_Power:4 D
gnd−00R3−12 — 7.1_Mux_Power:4 C

RJB
Electronic GND

gnd−00R4−12 — 7.1_Mux_Power:4 D
gnd−00R4−12 — 7.1_Mux_Power:4 E
gnd−00R5−8
gnd−00R5−14 — 1.1_batteries:0 B
gnd−00R5−12 — 14.1_Engine_Ecu:3 C
gnd−00R5−14 — 14.2_Urea:1 B
gnd−00R5−18 — 26.4_Trailer:1 D

gnd−00VA−2 — 1.1_batteries:0 C
gnd−00−1/0 — 1.1_batteries:2 B

Dash JB

AE55 (I/O_EA, 12WUP): J1:6, J1:18 — gnd−A55RJ1.18−18 — 41.1_Steering:2 B; J2:14
AE56 (I/O_EA, 24WUP): J1:6, J1:18; J2:14

FJB

AE41 (I/O_EA, 24VD): J1:6, J1:18 — gnd−A41RJ1.6−18 — 29.1_Entrance_door_Keyless:4 A; gnd−A41RJ1.18−18 — 29.1_Entrance_door_Keyless:4 D; J2:14 — gnd−A41RJ2.14−18 — 21.1_Converter_interface:4 A
AE42 (I/O_EA, 24WUP): J1:6, J1:18 — gnd−A42J1.18−16 — 21.1_Converter_interface:4 B; J2:14
AE43 (I/O_EB, 12VD): J1:6, J1:17 — gnd−A43RJ1.17−18 — 39.1_TPMS_ACB:0 A; 39.1_TPMS_ACB:2 D; J1:18; J2:2, J2:3, J2:14
AE44 (I/O_EB, 24WUP): J1:6, J1:17 — gnd−A44RJ1.17−18 — 26.1_Front_Lighting:4 E; 9.1_Horn:3 D; J1:18; J2:2 — gnd−A44RJ2.2−18 — 19.1_Driver_Lights:3 A; J2:3 — gnd−A44RJ2.3−16 — 34.1_wiper_washer:4 C; J2:14
AE45 (I/O_EB, 12WUP): J1:6, J1:17 — gnd−A45RJ1.17−16 — 26.5_Fog_Corn_Dock_Lts:3 B; J1:18; J2:2, J2:3, J2:14
AE46 (I/O_EB, 12WUp): J1:6, J1:17 — gnd−A46RJ1.17−14 — 26.1_Front_Lighting:3 C; gnd−A46RJ1.18−18 — 26.1_Front_Lighting:4 D; J1:18; J2:2, J2:3, J2:14

RH console JB

AE47 (I/O_EB, 24WUP): J1:6 — gnd−A47RJ1.6−18 — 18.3_Small_AC:2 B; 18.1_Defroster:2 A; J1:17 — gnd−A47RJ1.17−18 — 18.1_Defroster:4 C; J1:18 — gnd−A47RJ1.18−18 — 34.1_wiper_washer:3 C; J2:2; J2:3 — gnd−A47RJ2.3−14 — 18.3_Small_AC:4 B; J2:14
AE48 (I/O_EB, 12WUp): J1:6, J1:17 — gnd−A48RJ1.17−18 — 26.5_Fog_Corn_Dock_Lts:3 C; J1:18 — gnd−A48RJ1.18−18 — 26.1_Front_Lighting:4 B; J2:2 — gnd−A48RJ2.2−14 — 26.1_Front_Lighting:3 A; J2:3, J2:14

Evaporator

AE54 (I/O_EB, 24WUp): J1:6 — gnd−A54RJ1.6−18 — 18.2_Full_AC:0 D; 18.2_Full_AC:0 B; J1:17 — gnd−A54RJ1.17−16 — 18.2_Full_AC:4 C; J1:18 — gnd−A54RJ1.18−18 — 18.2_Full_AC:1 A; J2:2 — gnd−A54RJ2.2−16 — 18.2_Full_AC:4 D; J2:3 — gnd−A54RJ2.3−16 — 18.2_Full_AC:3 C; J2:14

Slide out front left

AE58 (I/O_EB, 24WUp): J1:6, J1:17 — gnd−A58RJ1.17−14 — 20.1_SlideOut1:2 B; J1:18; J2:2 — gnd−A58RJ2.2−18 — 20.1_SlideOut1:3 B; J2:3, J2:14

Slide out rear left

AE59 (I/O_EB, 24WUp): J1:6, J1:17 — gnd−A59RJ1.17−14 — 20.2_SlideOut2:3 B; J1:18; J2:2 — gnd−A59RJ2.2−18 — 20.2_SlideOut2:4 B; J2:3, J2:14

RJB

AE49 (I/O_EB, 24WUP): J1:6 — gnd−A49RJ1.6−18 — 18.3_Small_AC:2 D; J1:17 — gnd−A49J1.18−18 — 18.3_Small_AC:5 D; J1:18 — gnd−A49RJ1.18−18 — 18.2_Full_AC:4 D; J2:2 — gnd−A49RJ2.2−18 — 13.1_FanDriveElectric:1 D; J2:3 — gnd−A49RJ2.3−18 — 18.3_Small_AC:2 D; J2:14
AE50 (I/O_EB, 12WUP): J1:6, J1:17 — gnd−A50RJ1.17−18 — 26.2_Rear_lighting:2 F; J1:18 — gnd−A50RJ1.18−18 — 26.2_Rear_lighting:2 B; J2:2 — gnd−A50RJ2.2−18 — 26.3_Backup_Warnings:3 B; J2:3 — gnd−A50RJ2.3−18 — 37.1_VLink_ADryer:2 D; J2:14
AE51 (I/O_EB, 12WUp): J1:6, J1:17 — gnd−A51RJ1.17−18 — 26.2_Rear_lighting:2 D; J1:18 — gnd−A51RJ1.18−16 — 26.5_Fog_Corn_Dock_Lts:3 E; J2:2; J2:3; J2:14
AE52 (I/O_EB, 24WUP): J1:6, J1:17 — gnd−A52RJ1.17−18 — 1.1_batteries:1 D; J1:18 — gnd−A52RJ1.18−18 — 25.1_Cmpt_Lighting:4 B; J2:2; J2:3 — gnd−A52RJ2.3−18 — 3.2_Ign_Start:1 C; J2:14

Chassis ground distribution

Ground distribution:
0-Electric gnd
00- Electronic Gnd

A-Dash - Lh console harness
F-Front junction box harness
FH-Front harness
R-Rear junction box harness
FR-Front to rear

Front GND stud

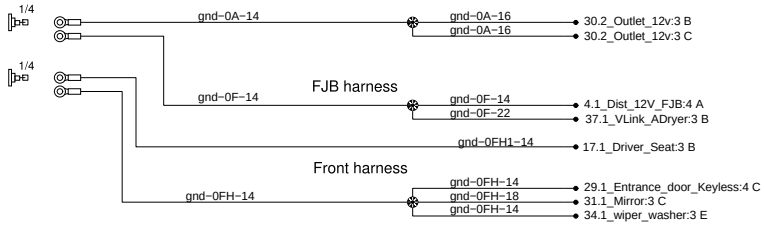

Evaporator cmpt. stud

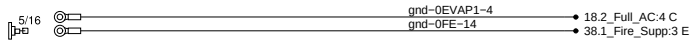

Urea cmpt. stud

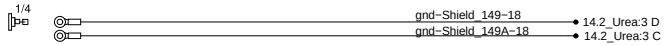

Condensor cmpt. stud

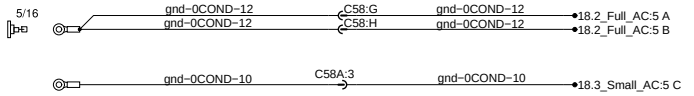

RJB stud

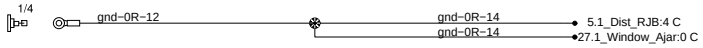

Front radiator stud



Rear radiator stud

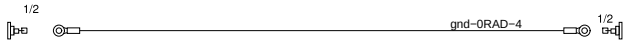

Radiator on door stud

Trailer stud



Engine studs

Engine cmpt. studs

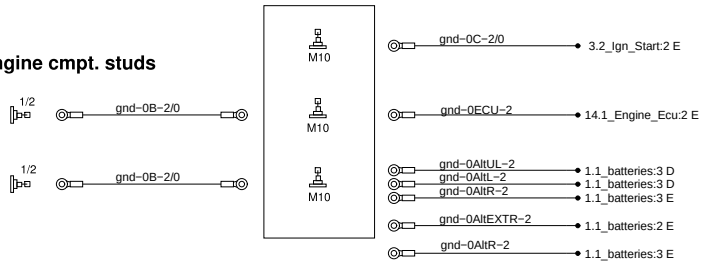

Ground distribution:
0-Electric gnd
00- Electronic Gnd

A-Dash - Lh console harness
F-Front junction box harness
FH-Front harness
R-Rear junction box harness
FR-Front to rear

Chassis ground distribution

Front GND stud

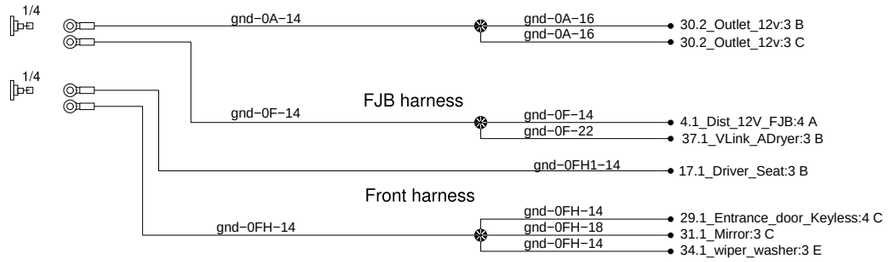

Evaporator cmpt. stud

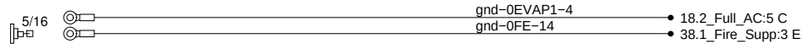

Urea cmpt. stud

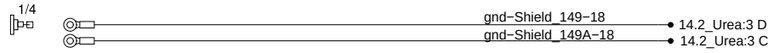

Condensor cmpt. stud

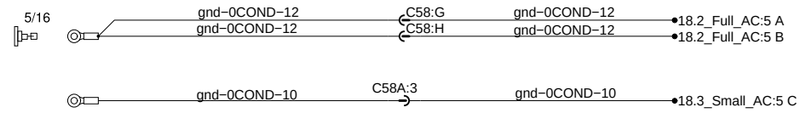

RJB stud

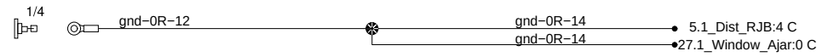

Front radiator stud



Rear radiator stud

Radiator on door stud



Trailer stud



Engine studs

Engine cmpt. studs

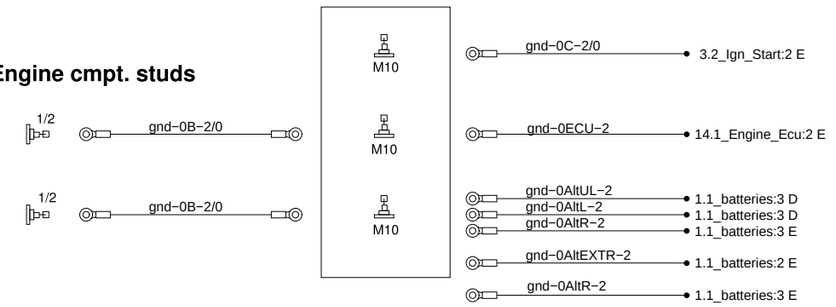

Ground distribution:
0-Electric gnd
00- Electronic Gnd

A-Dash - Lh console harness
F-Front junction box harness
FH-Front harness
R-Rear junction box harness
FR-Front to rear

Chassis ground distribution

Front GND stud

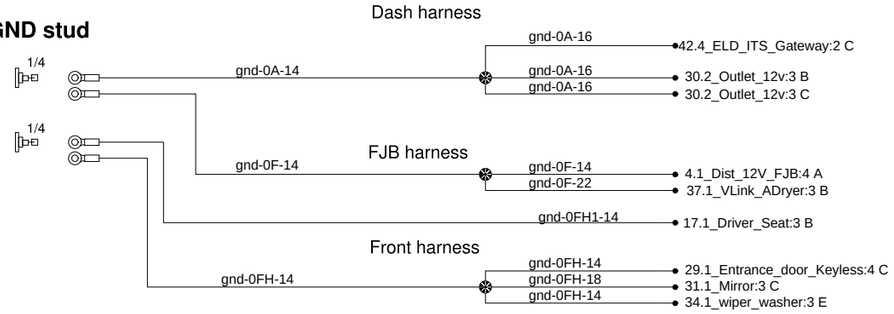

Evaporator cmpt. stud

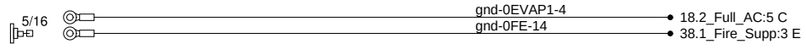

Urea cmpt. stud

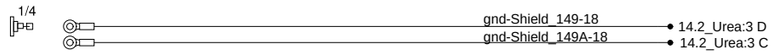

Condensor cmpt. stud

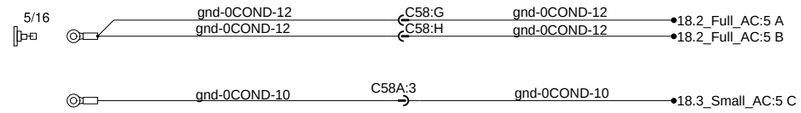

RJB stud

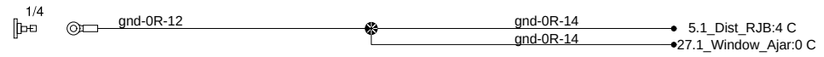

Front radiator stud



Rear radiator stud

Radiator on door stud



Trailer stud



Engine studs

Engine cmpt. studs

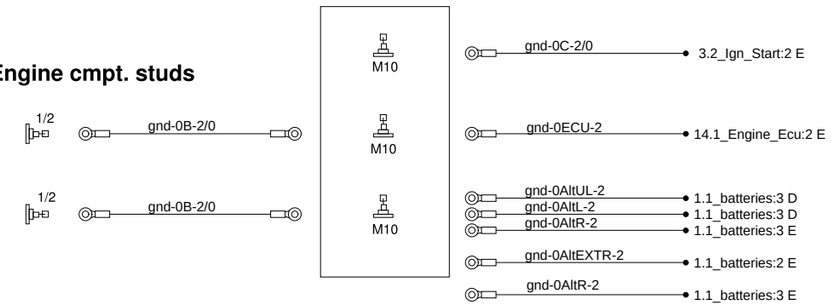

Ground distribution:
0-Electric gnd
00- Electronic Gnd

A-Dash - Lh console harness
F-Front junction box harness
FH-Front harness
R-Rear junction box harness
FR-Front to rear

Chassis ground distribution

Front GND stud

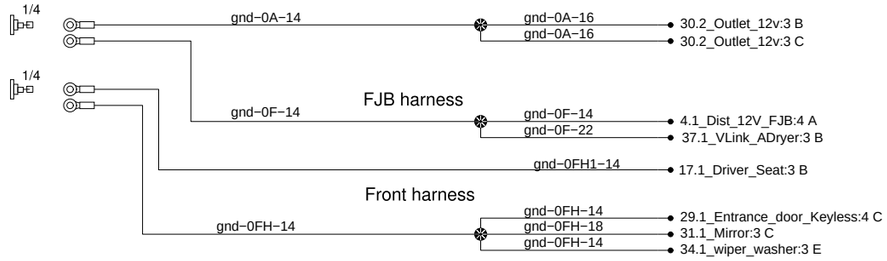

Evaporator cmpt. stud

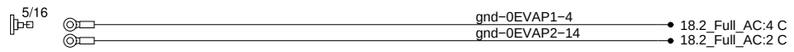

Urea cmpt. stud

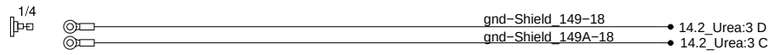

Located on the top of the luggage compartment



Condensor cmpt. stud

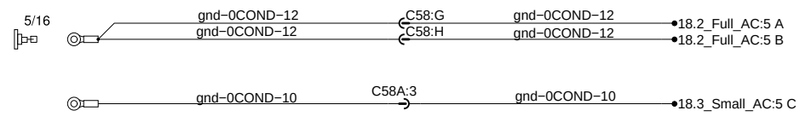

RJB stud

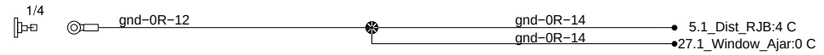

Front radiator stud



Rear radiator stud

Radiator on door stud

Trailer stud

Engine studs

Engine cmpt. studs

Main distribution batteries & ignition

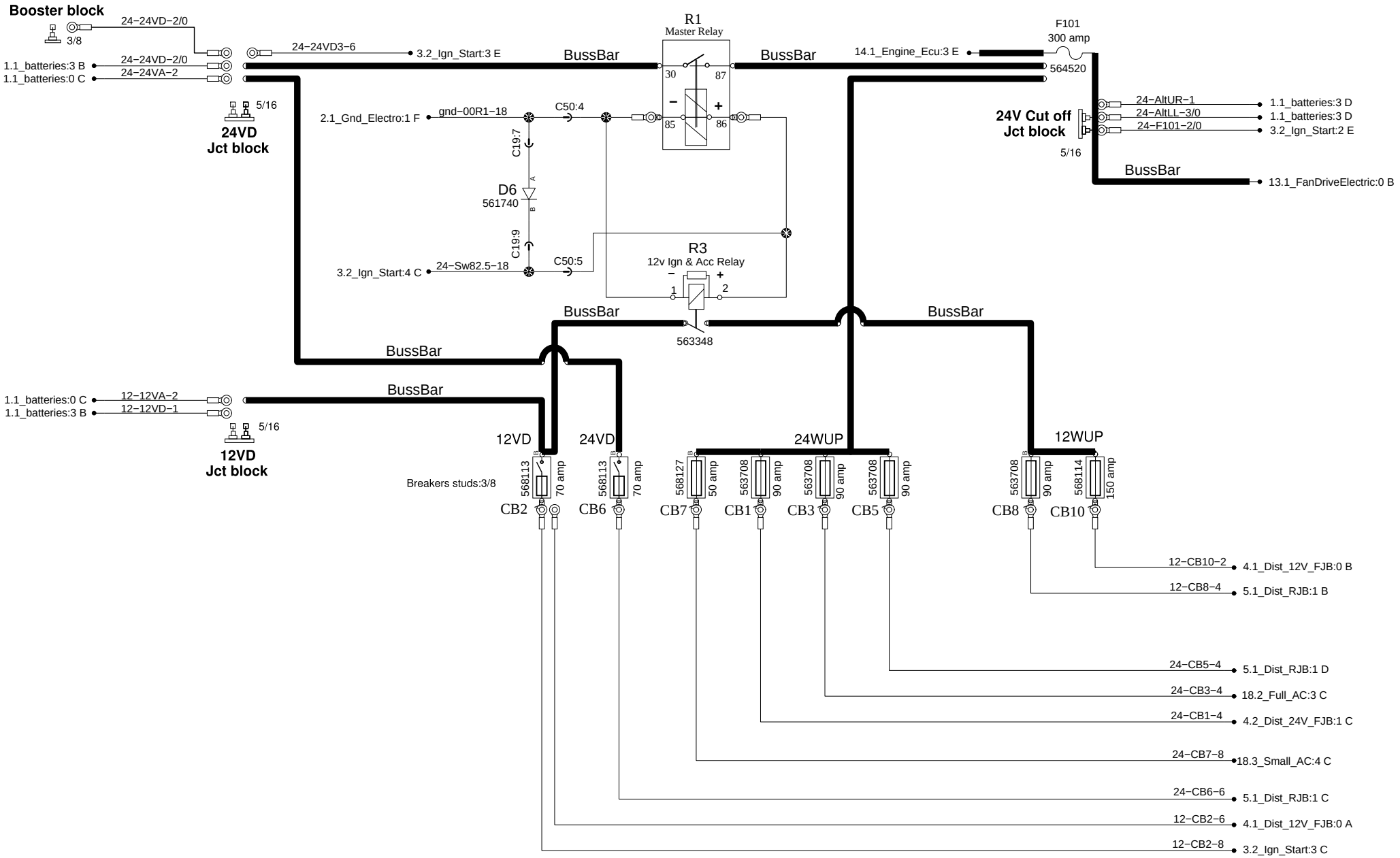

PREVOST®	WIRING DIAGRAM	No:D061670	Page:3.1	Rev:2

Main distribution batteries & ignition

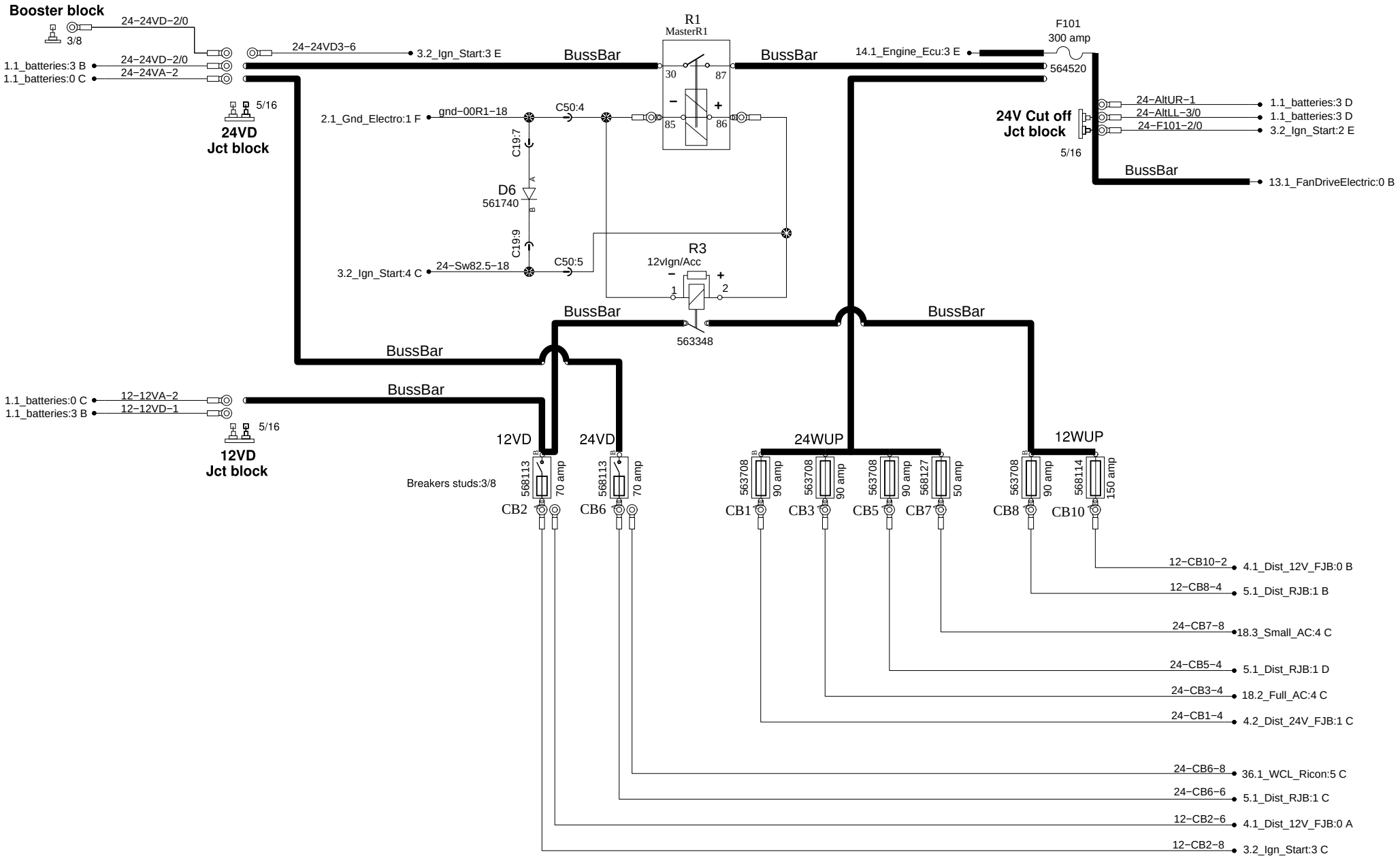

Main distribution batteries & ignition

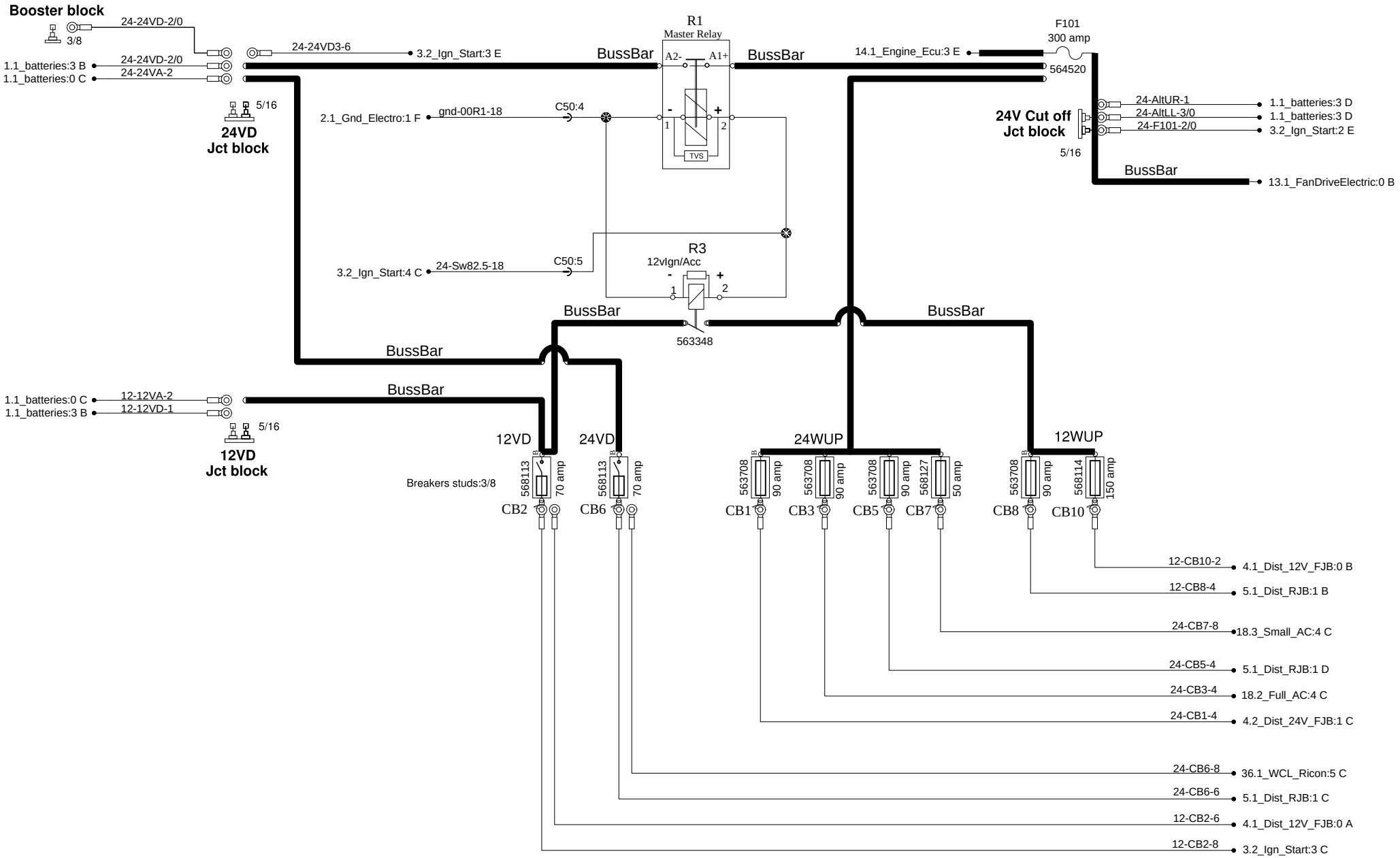

PREVOST®	WIRING DIAGRAM	No:D061670	Page:3.1	Rev:17

Main distribution batteries & ignition

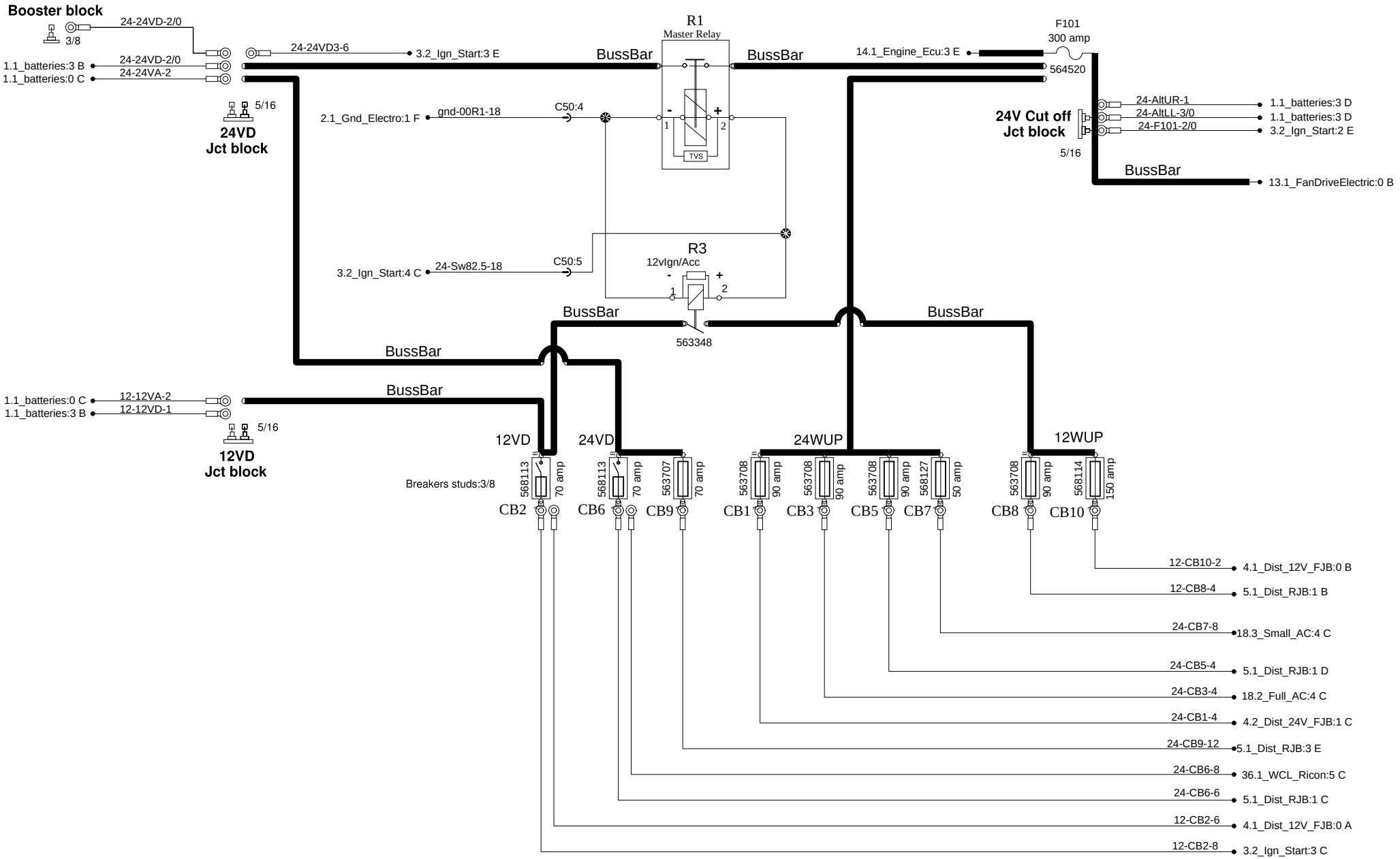

PREVOST®	WIRING DIAGRAM	No:D061670	Page:3.1	Rev:20

Main distribution batteries & ignition

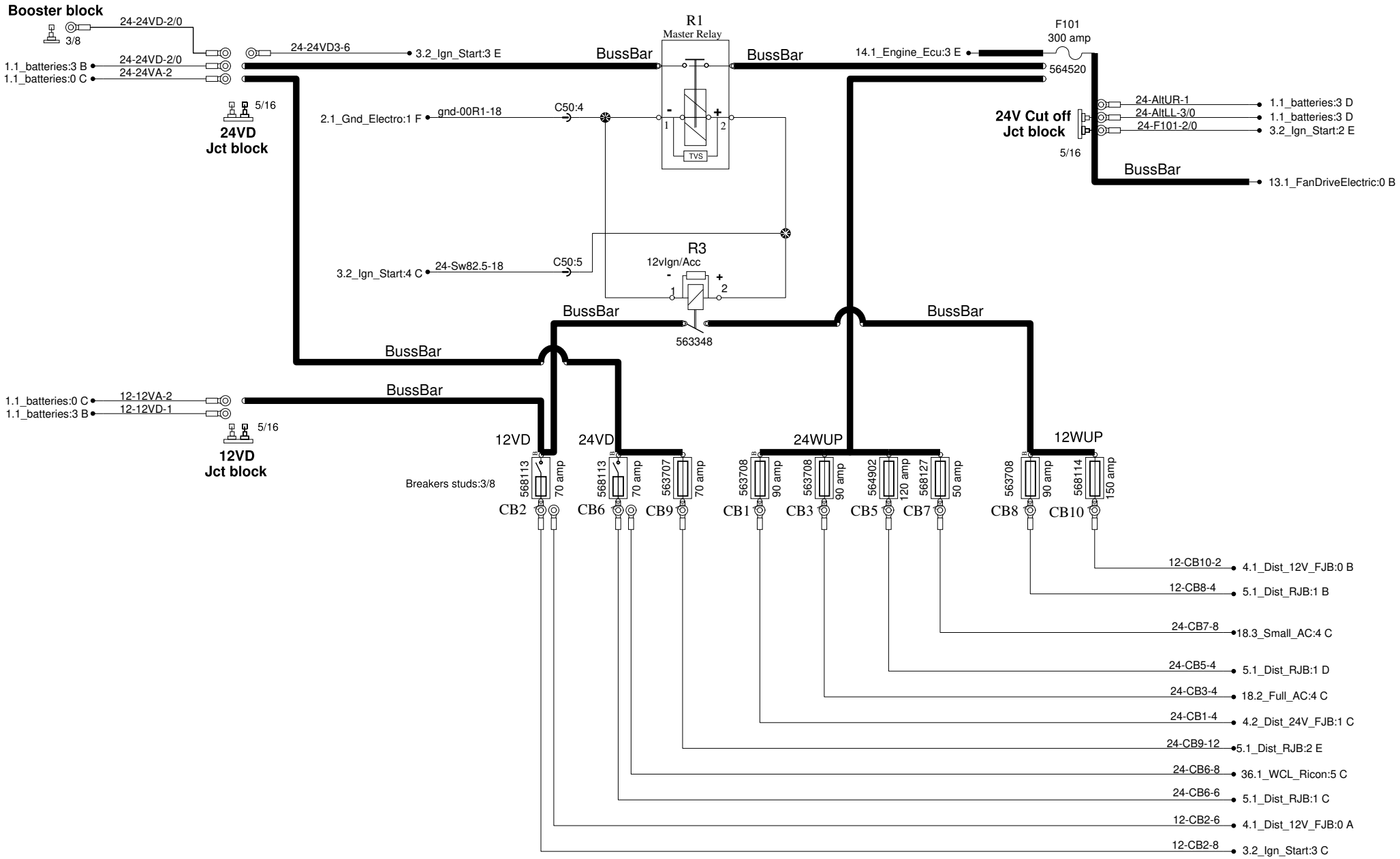

PREVOST®	WIRING DIAGRAM	No:D061670	Page:3.1	Rev:28

Ignition and engine start

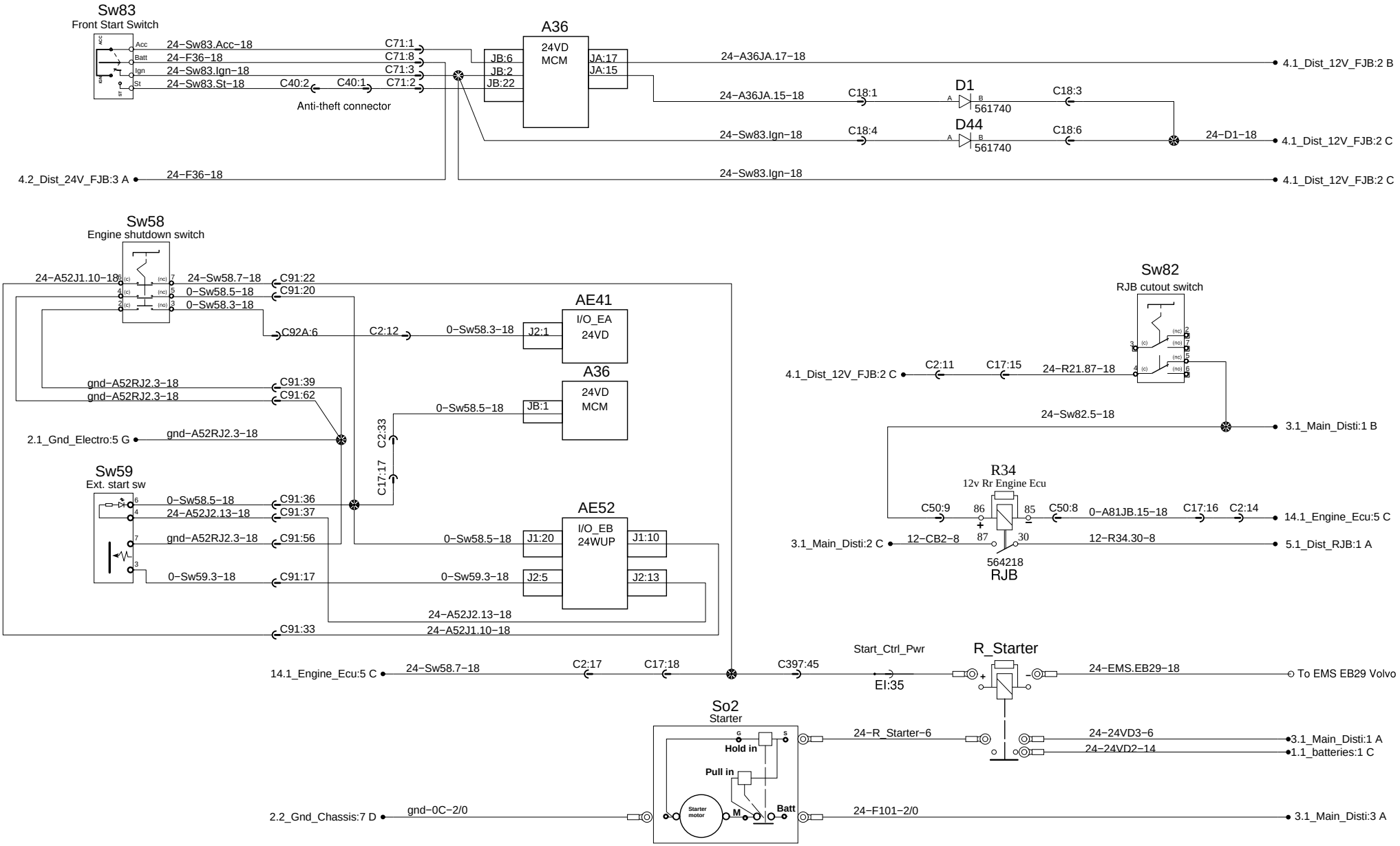

Ignition and engine start

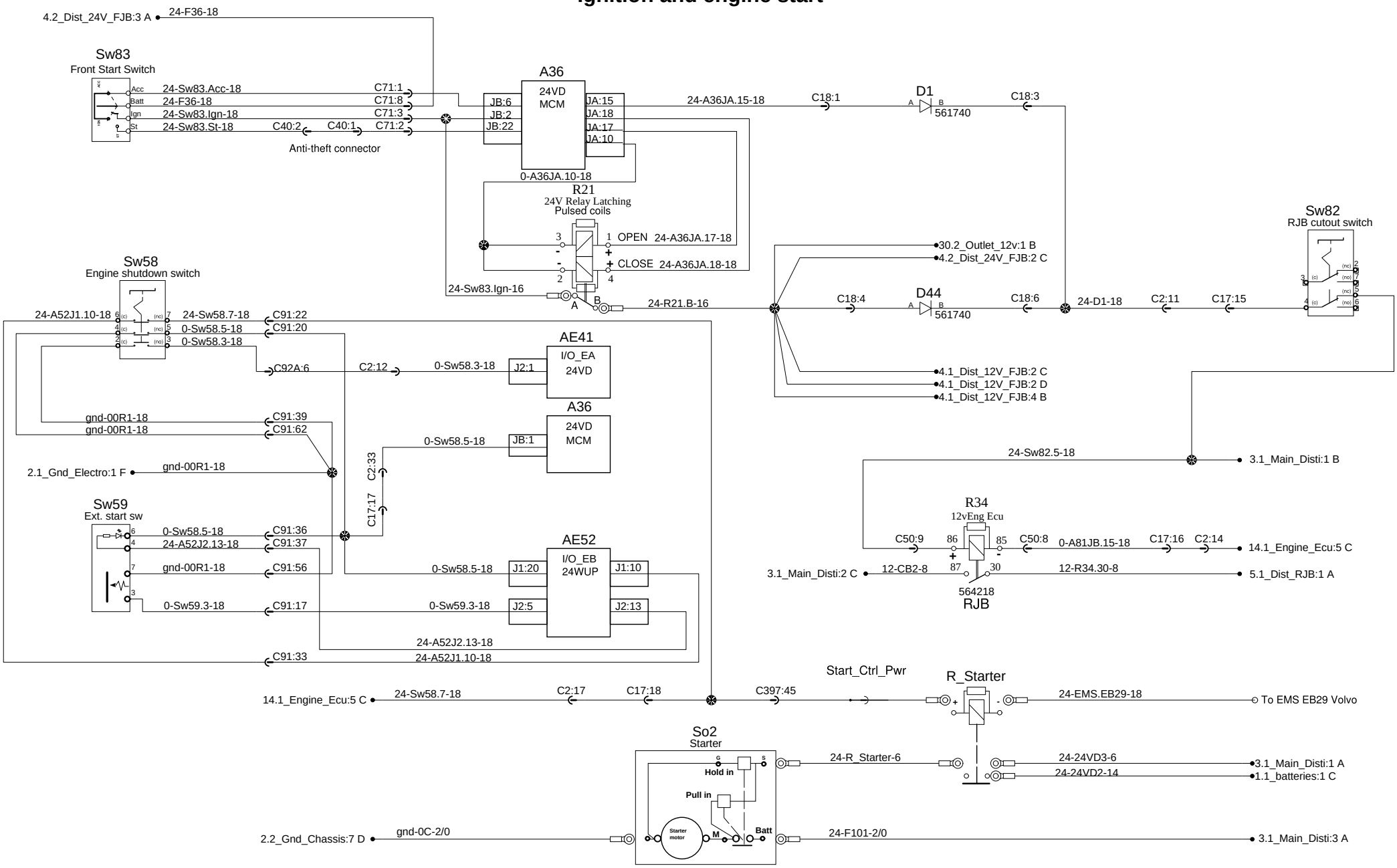

Ignition and engine start

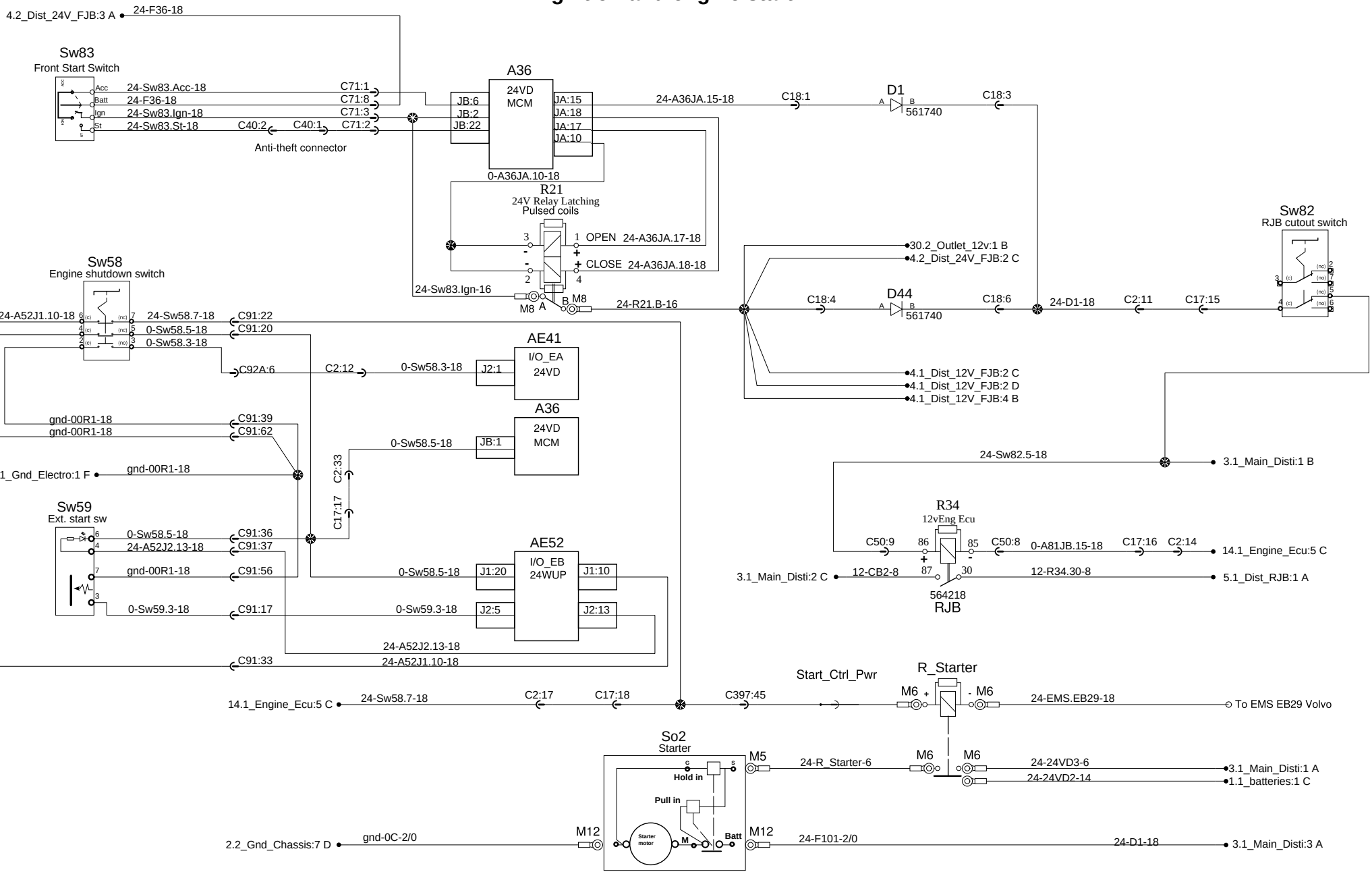

PREVOST®	WIRING DIAGRAM	No:D061670	Page:3.2	Rev:14

Ignition and engine start

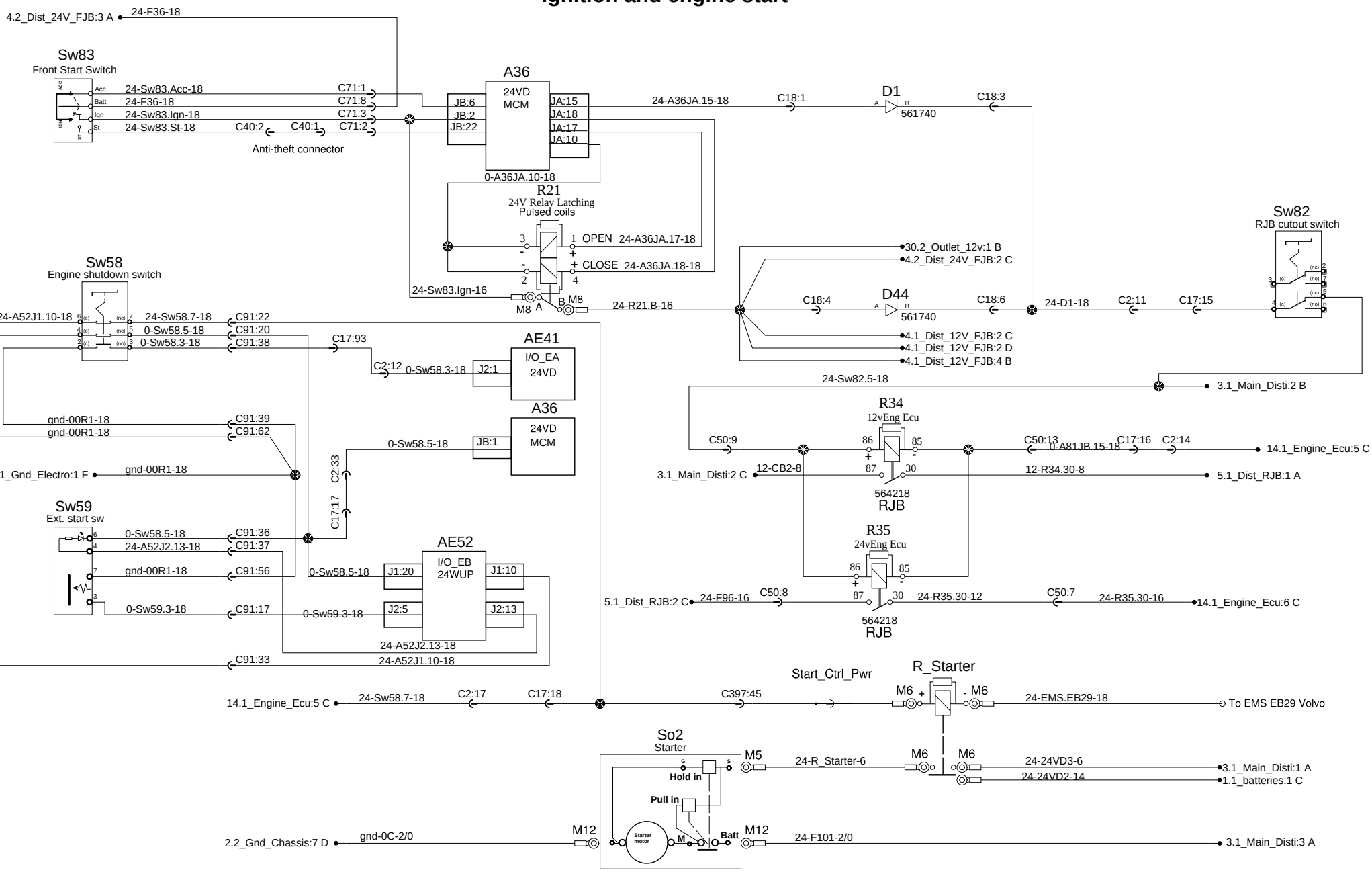

Ignition and engine start

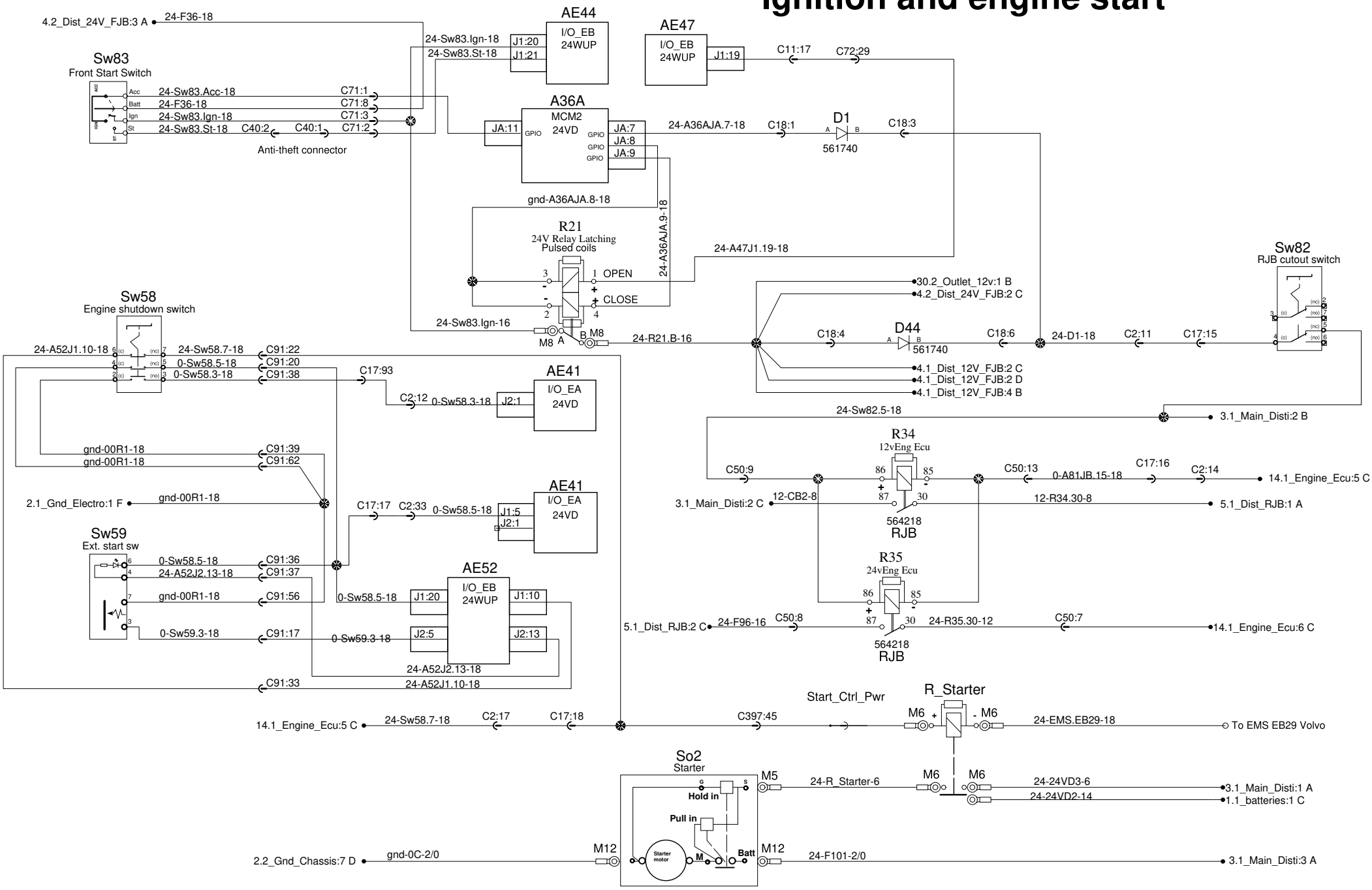

12V Power distribution front junction box

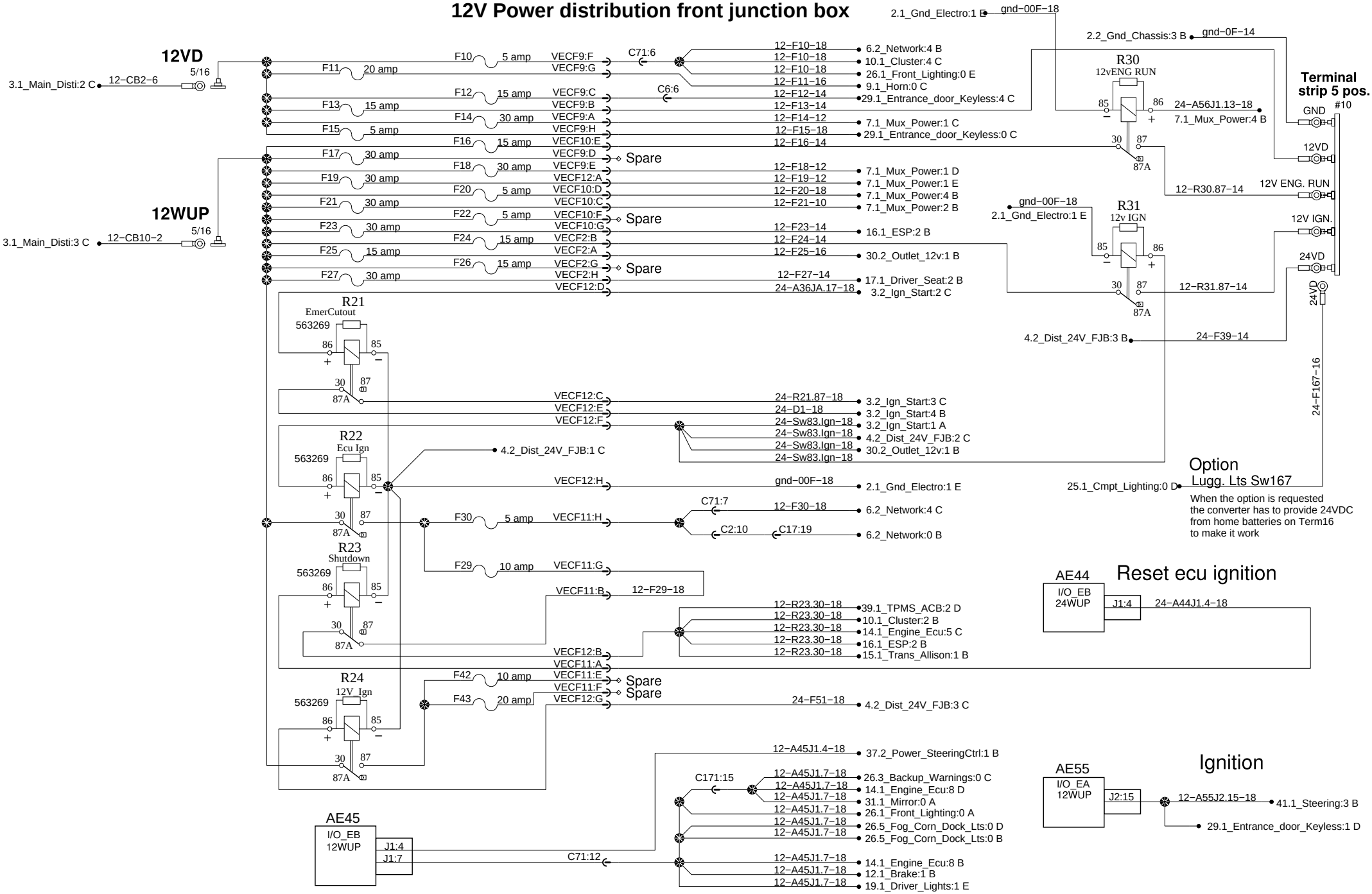

PREVOST®	WIRING DIAGRAM	No:D061670	Page:4.1	Rev:6

12V Power distribution front junction box

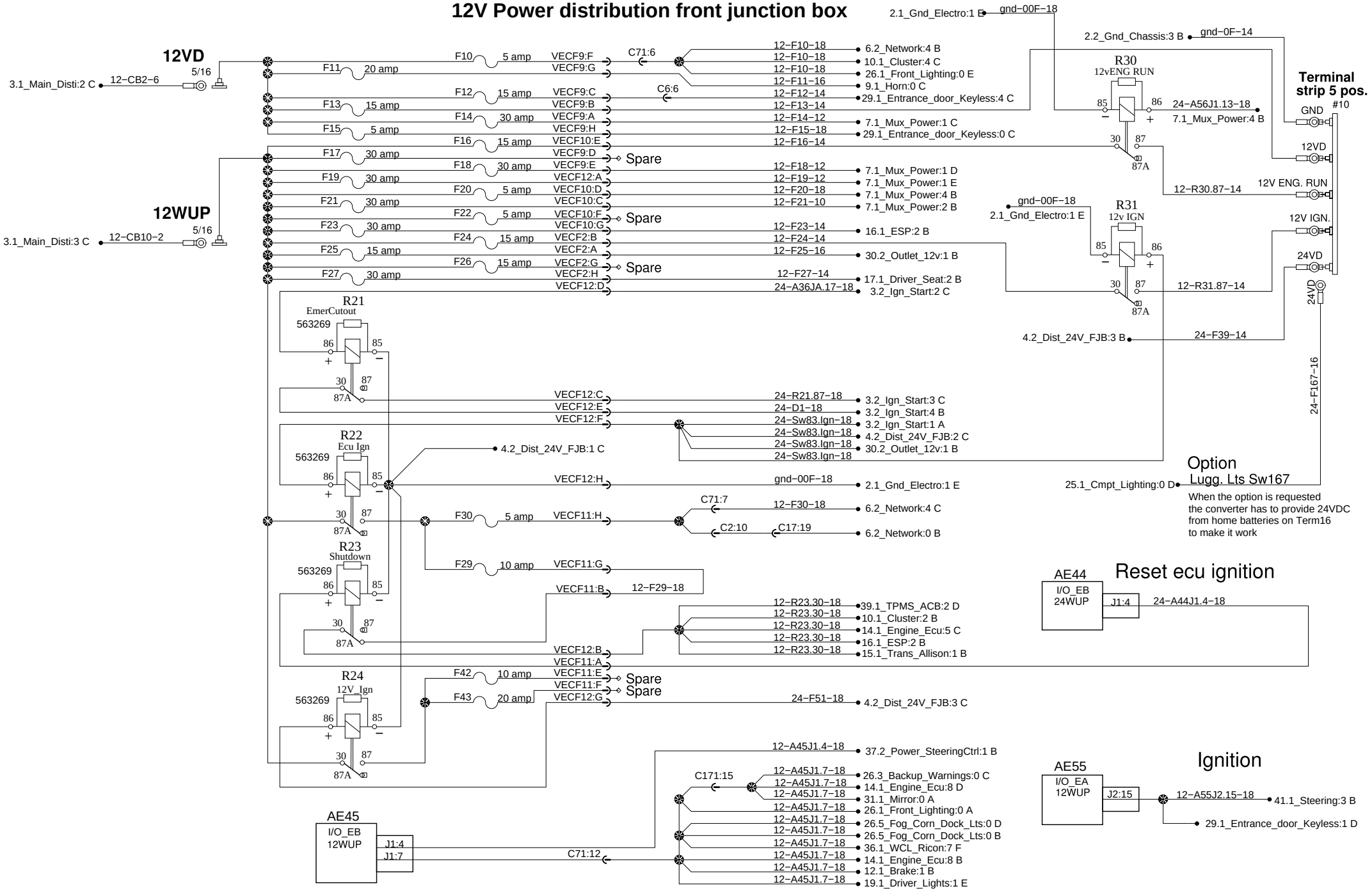

PREVOST®	WIRING DIAGRAM	No:D061670	Page:4.1	Rev:9

12V Power distribution front junction box

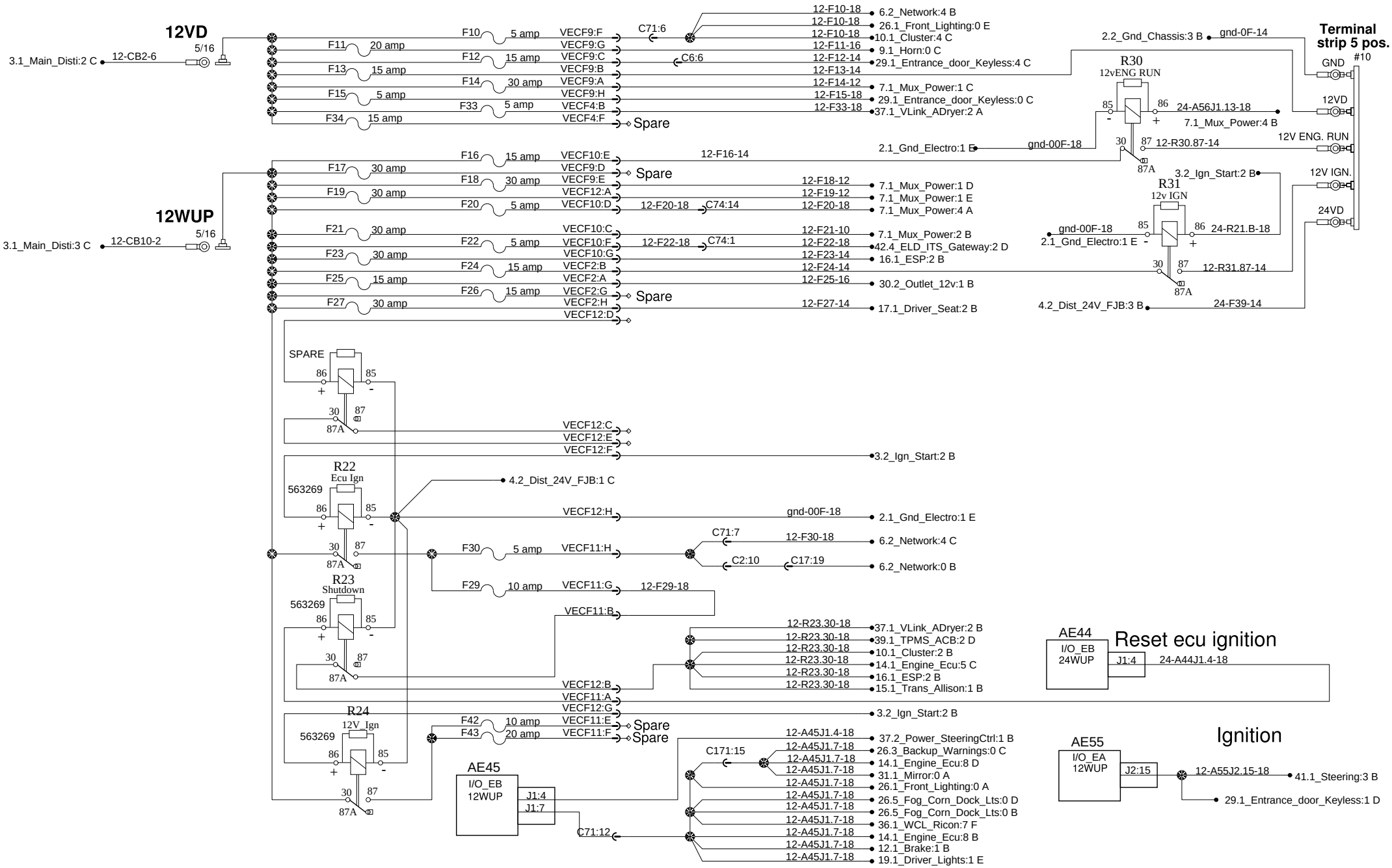

PREVOST®	WIRING DIAGRAM	No:D061670	Page:4.1	Rev:11

12V Power distribution front junction box

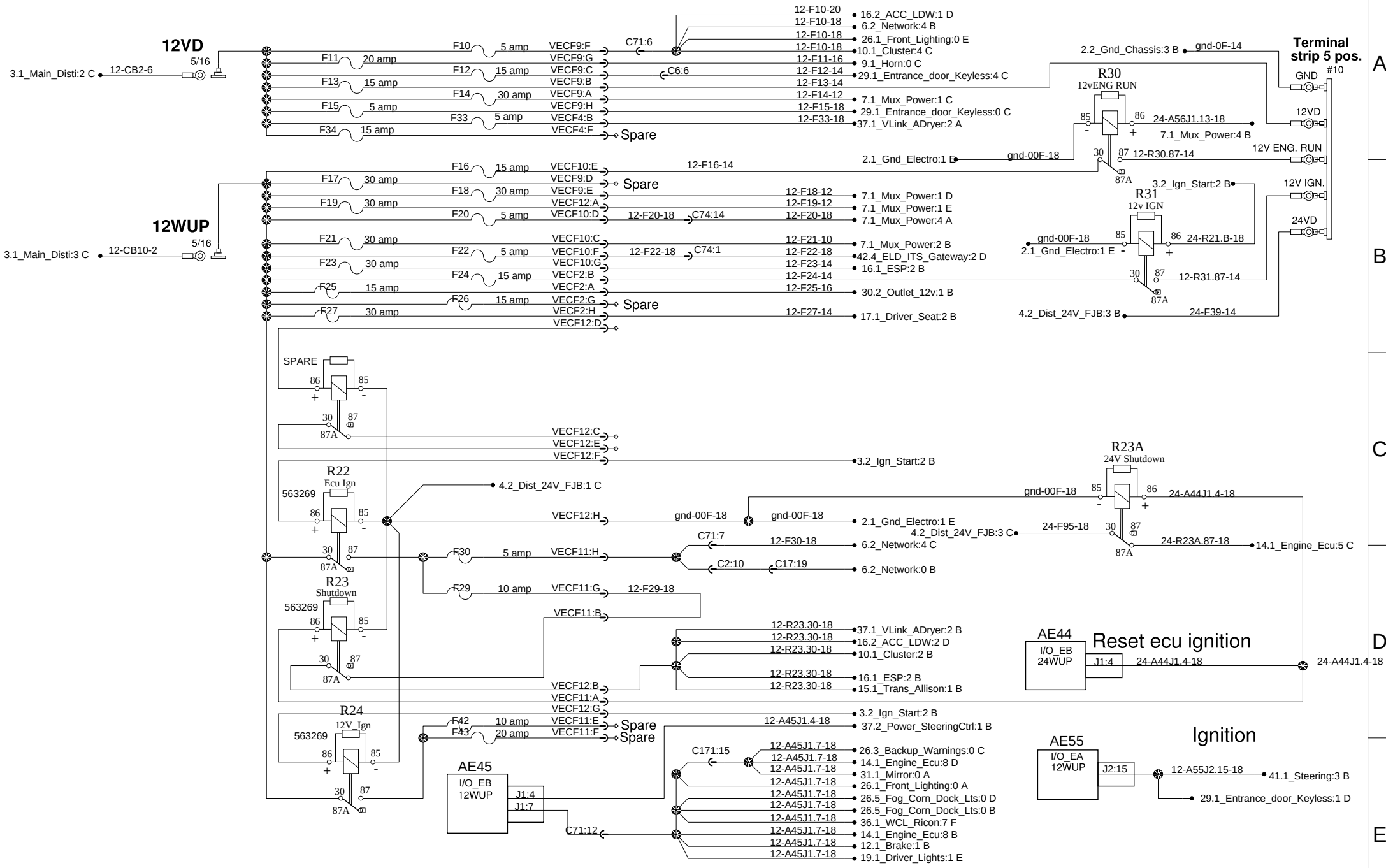

PREVOST®	WIRING DIAGRAM	No:D061670	Page:4.1	Rev:22

12V Power distribution front junction box

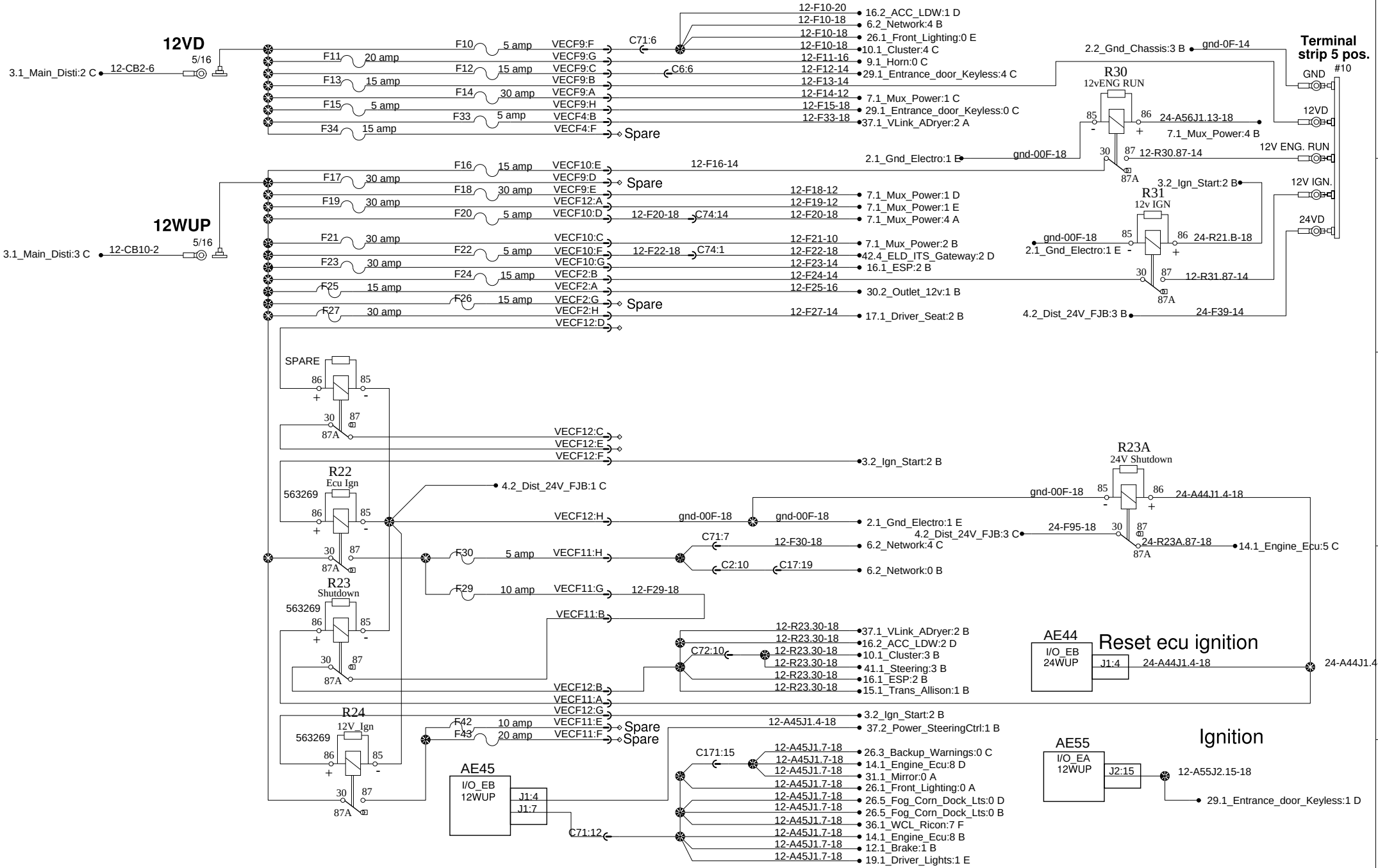

12V Power distribution front junction box

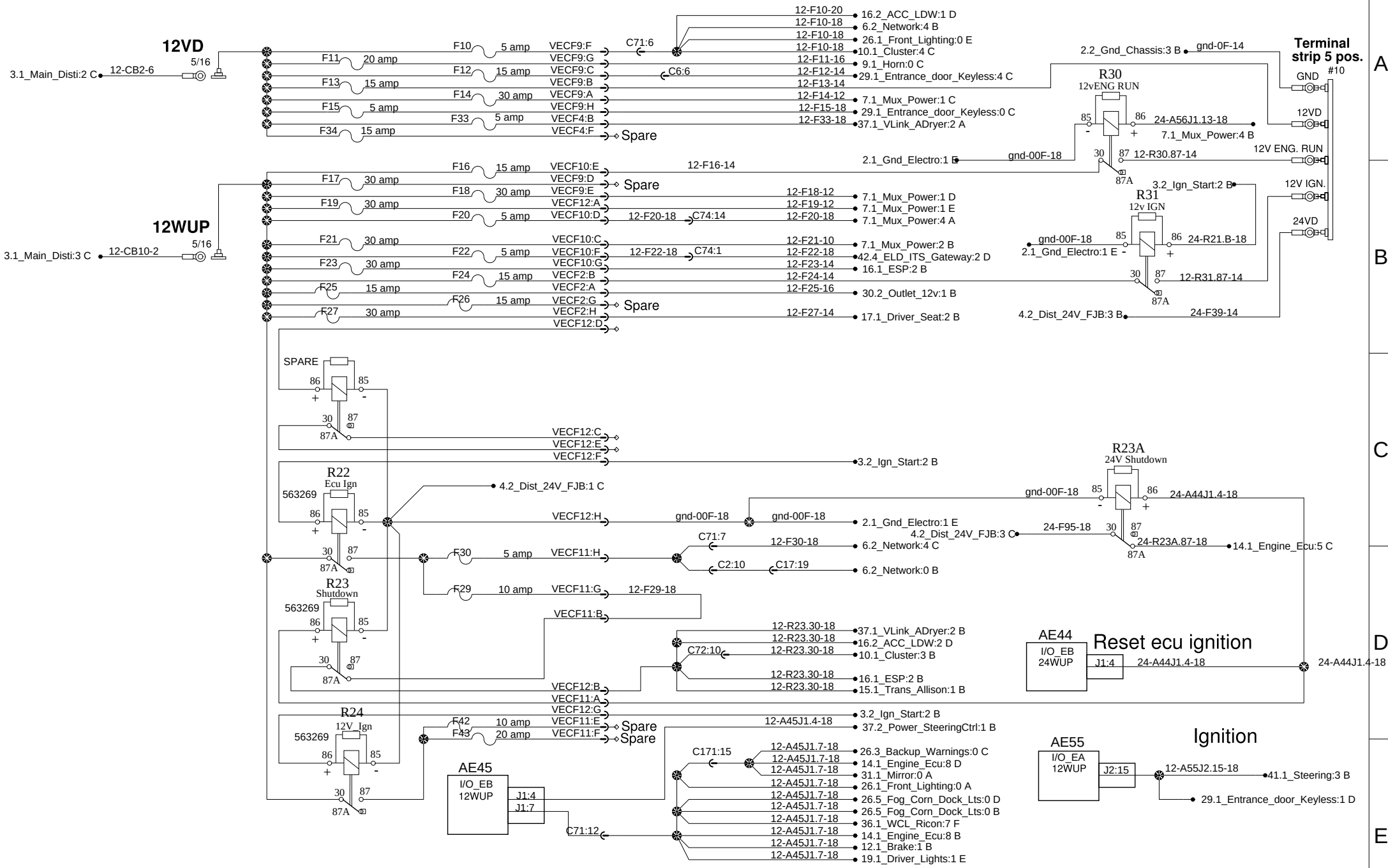

PREVOST®	WIRING DIAGRAM	No:D061670	Page:4.1	Rev:26

12-24V Power distribution FJB
Customer adaptation option RH console switch

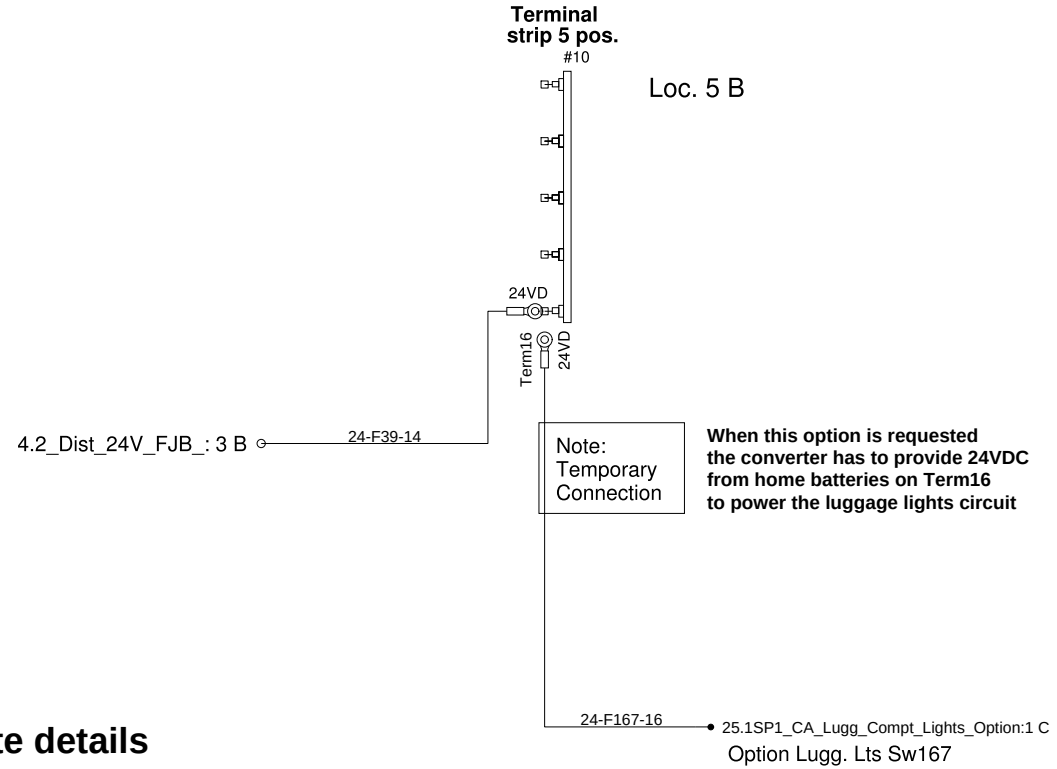

Refer to page 4.1 for complete details

24V Power distribution front junction box

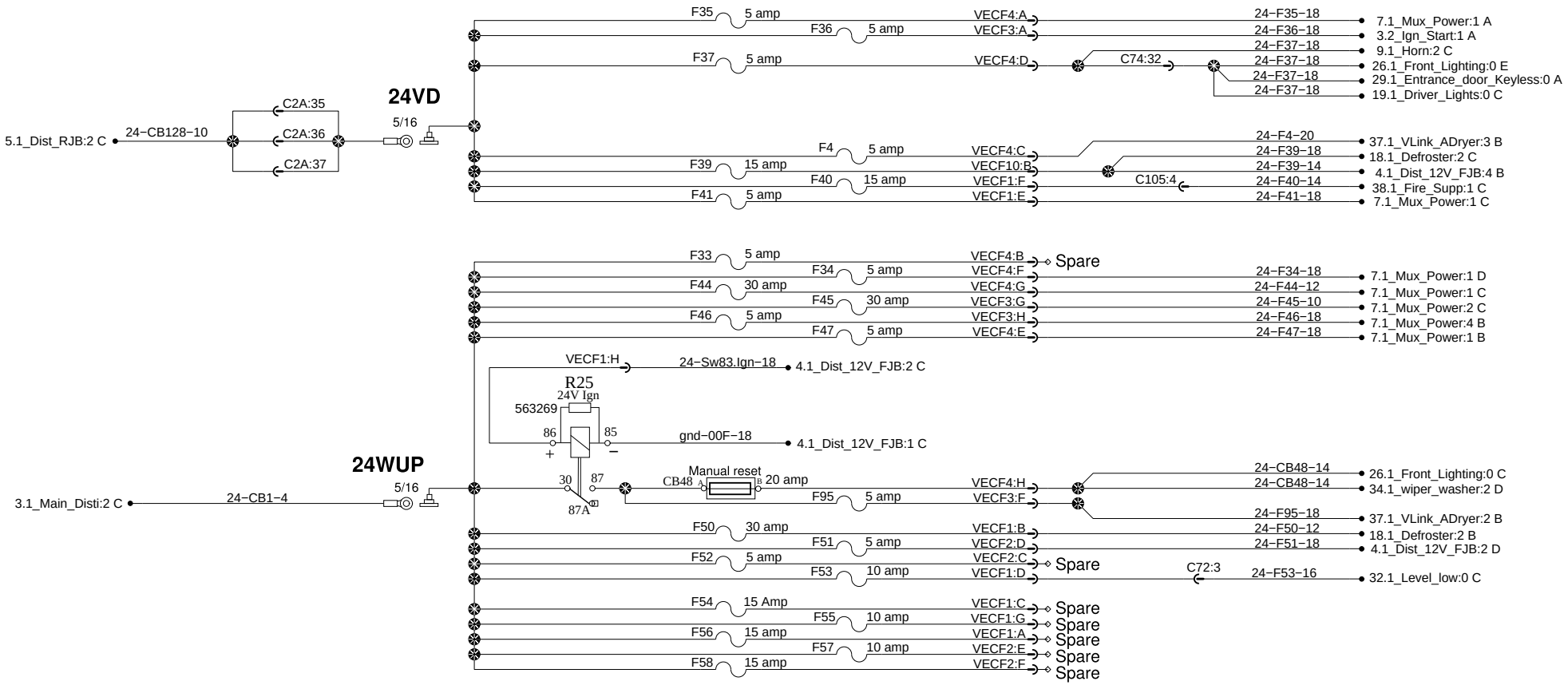

Ignition

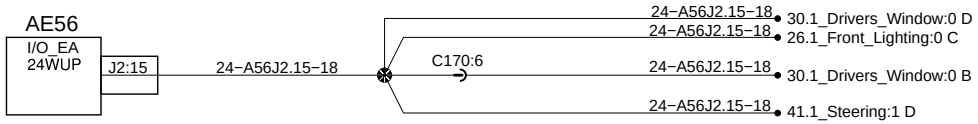

24V Power distribution front junction box

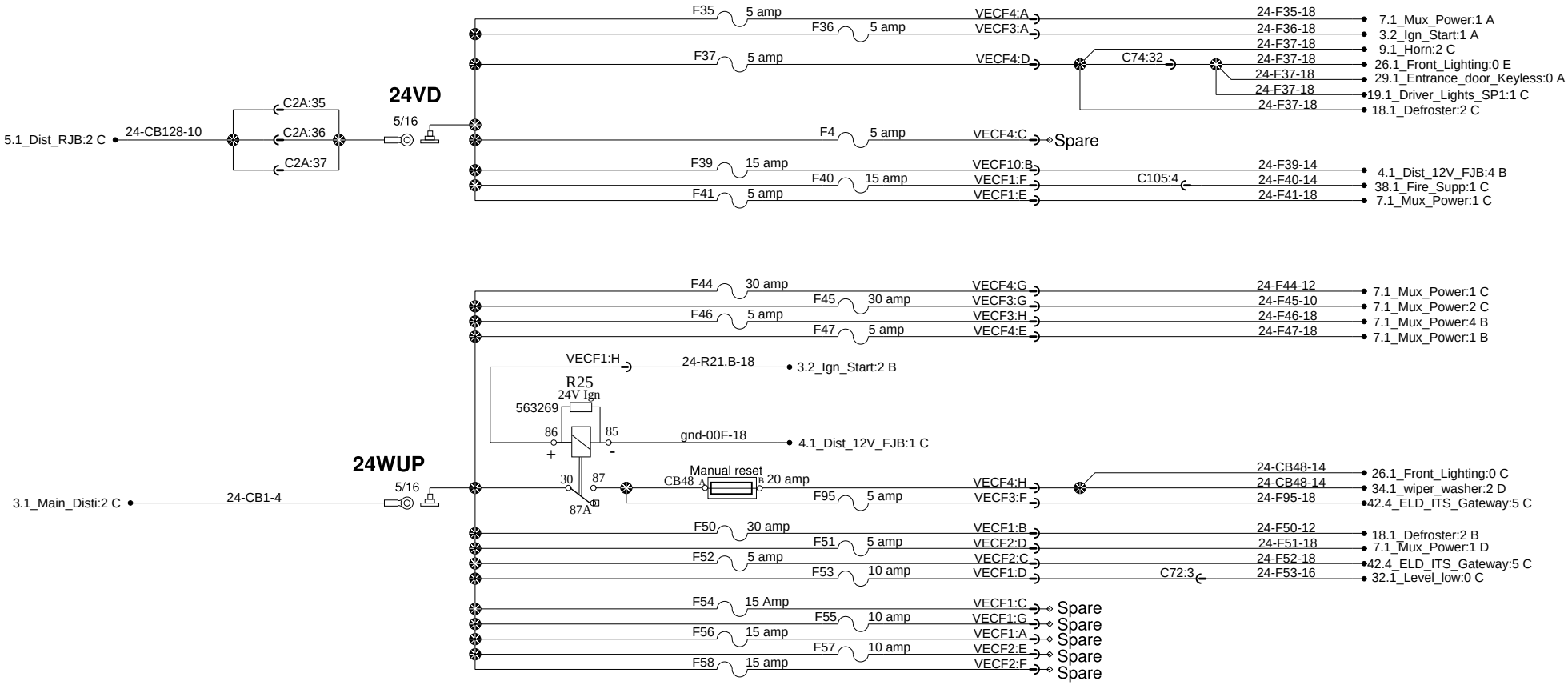

Ignition

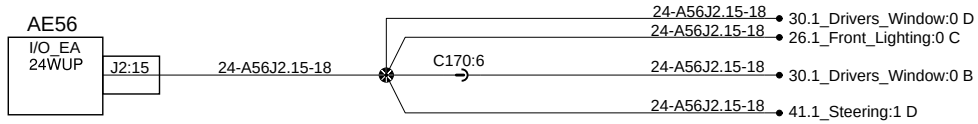

24V Power distribution front junction box

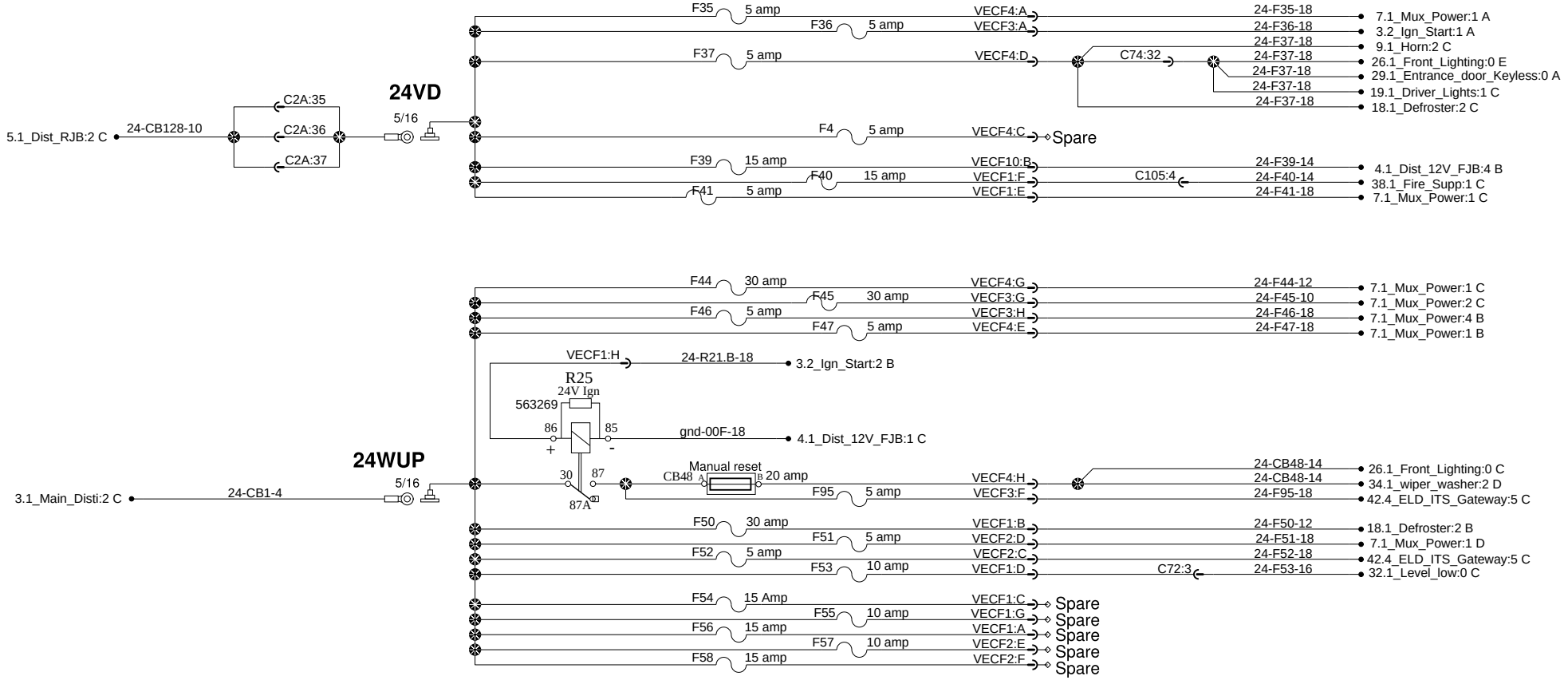

Ignition

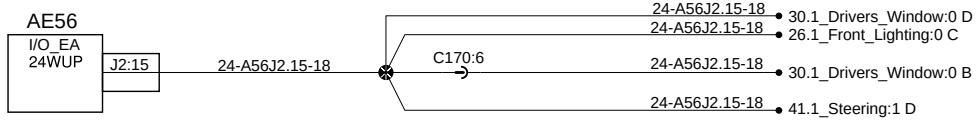

24V Power distribution front junction box

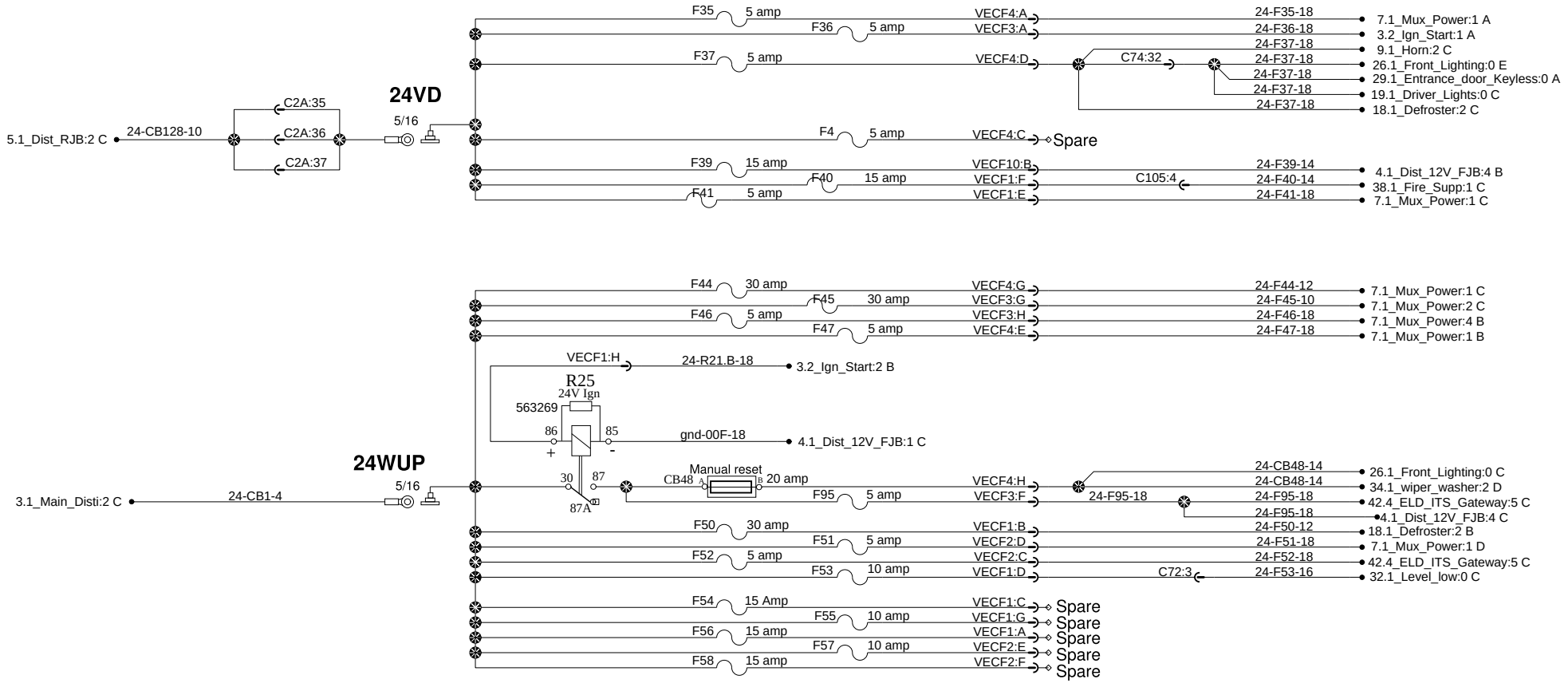

Ignition

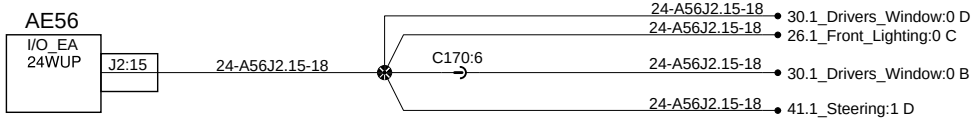

24V Power distribution front junction box

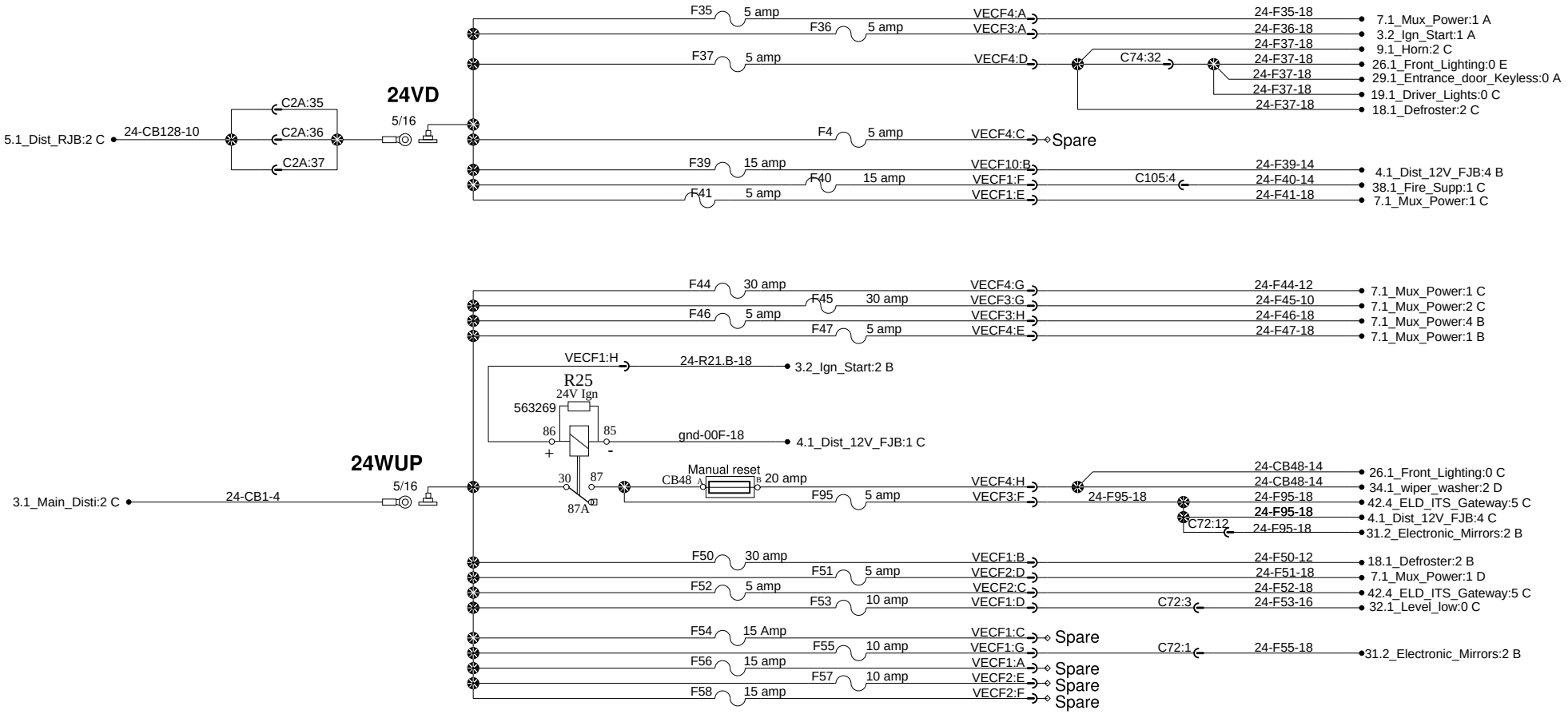

Ignition

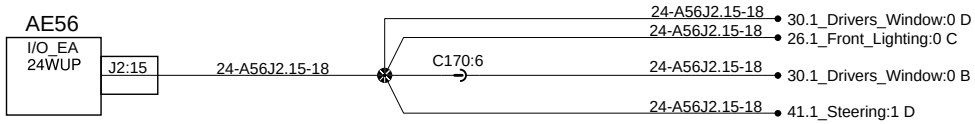

24V Power distribution front junction box

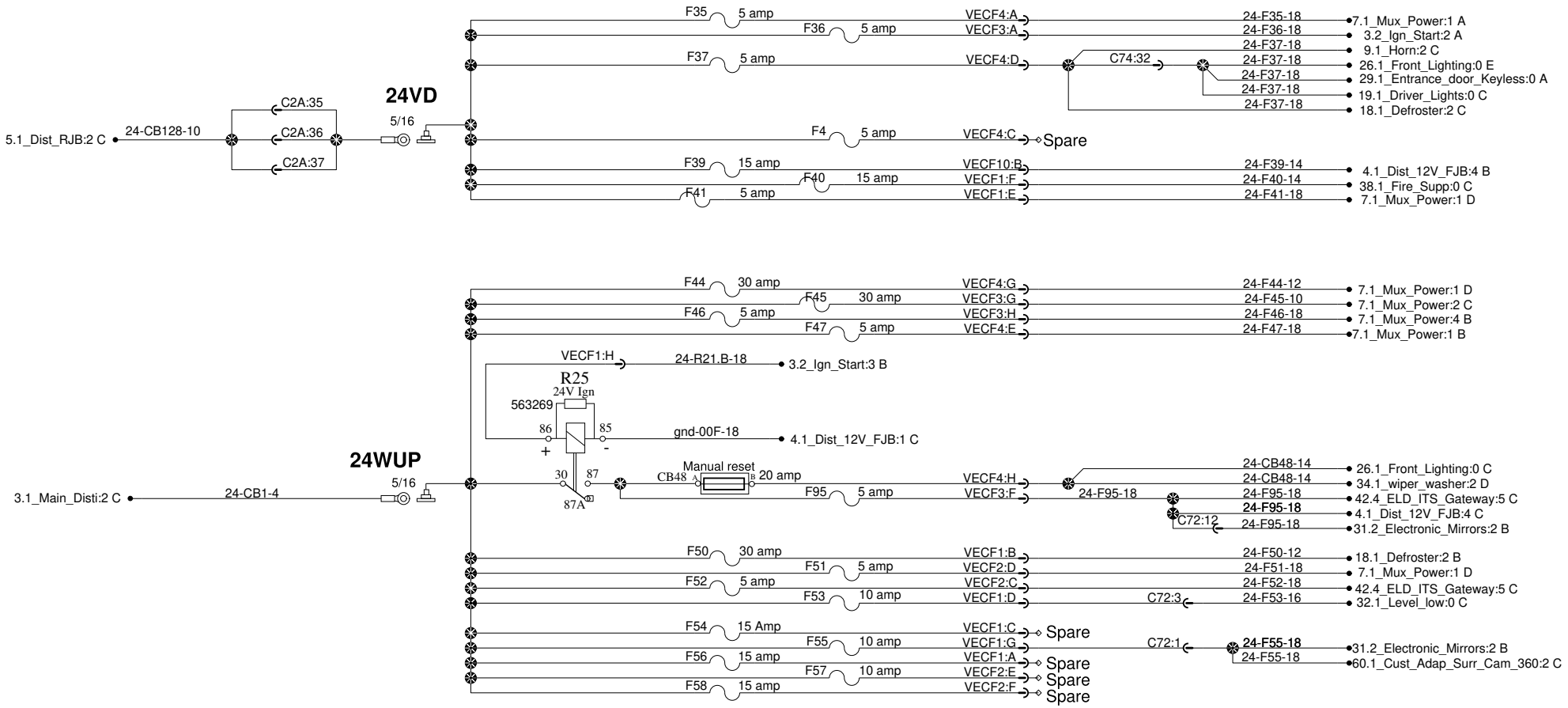

Ignition

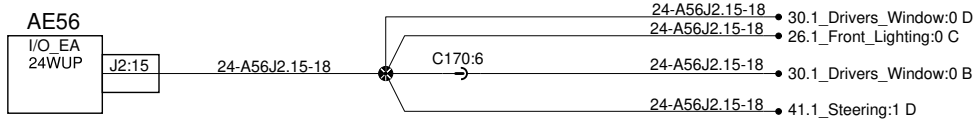

Power distribution rear junction box

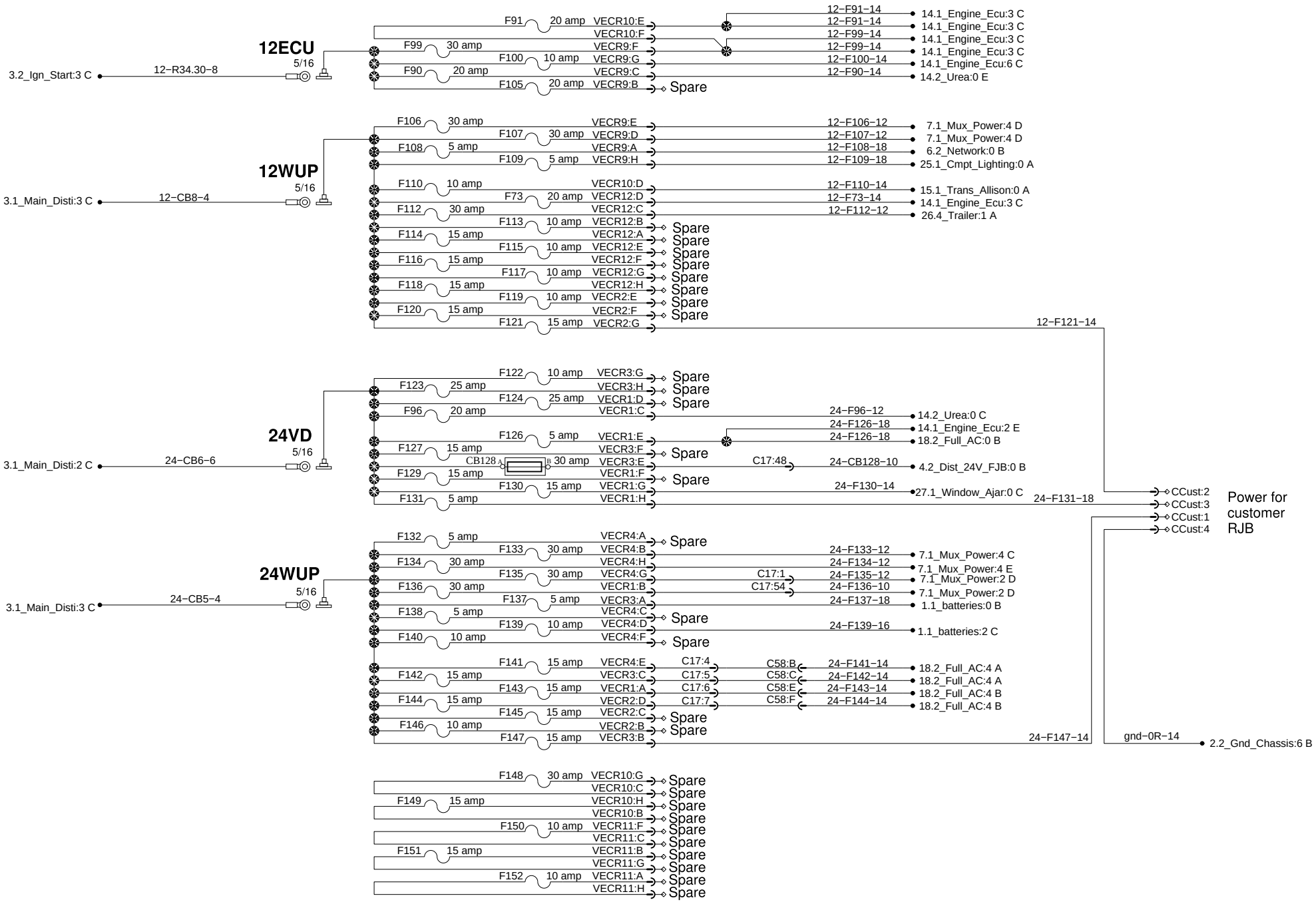

Power distribution rear junction box

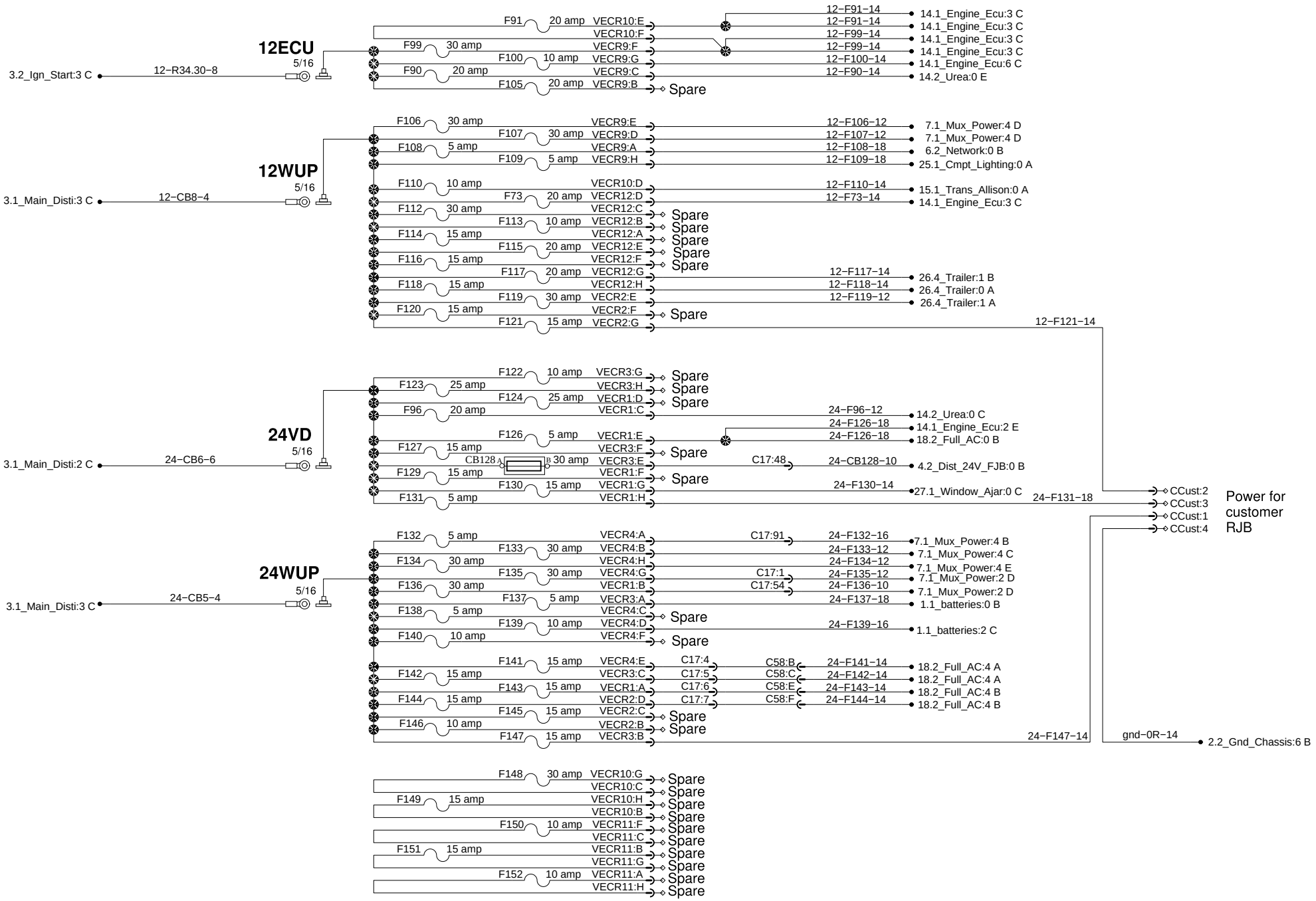

Power distribution rear junction box

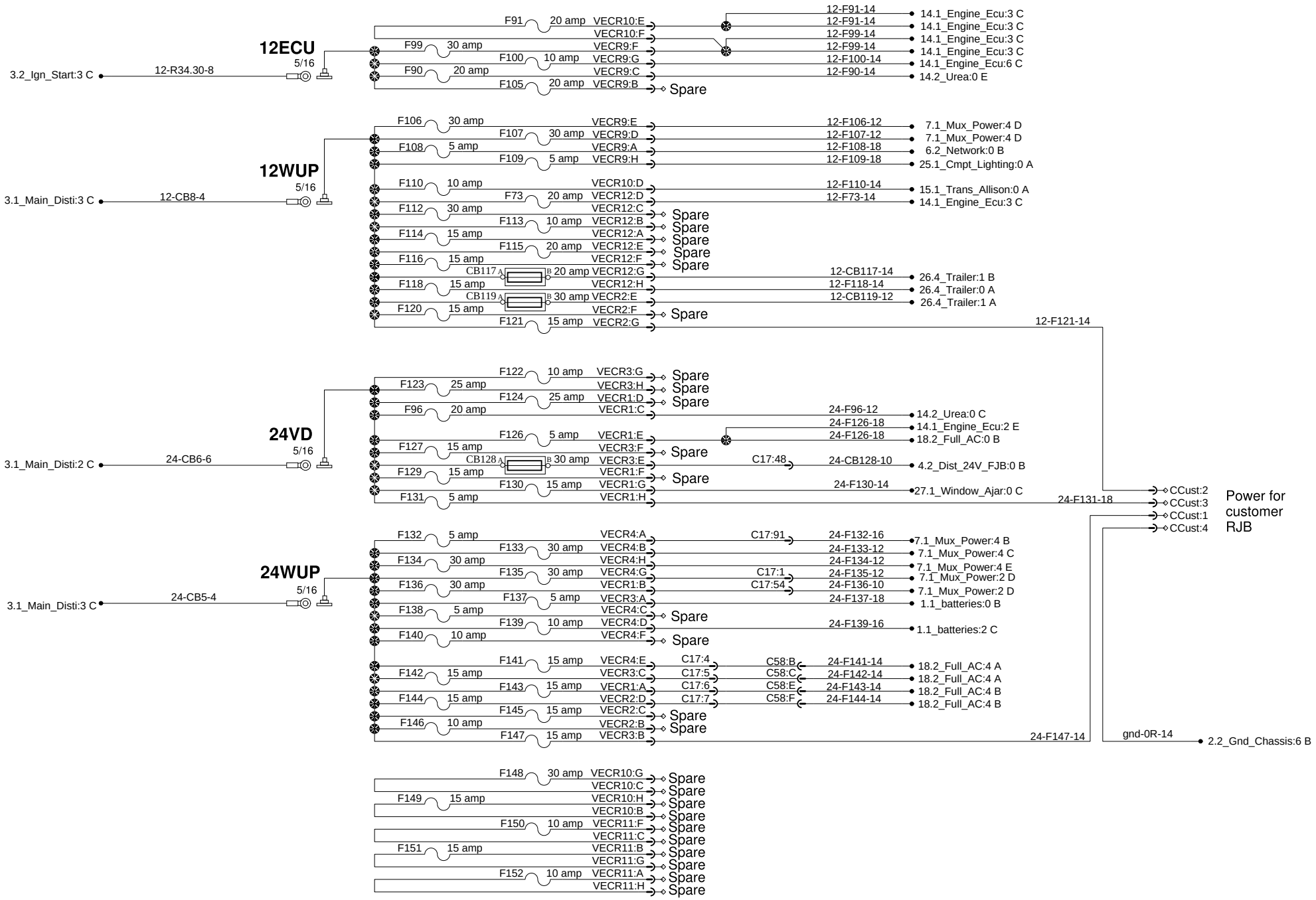

Power distribution rear junction box

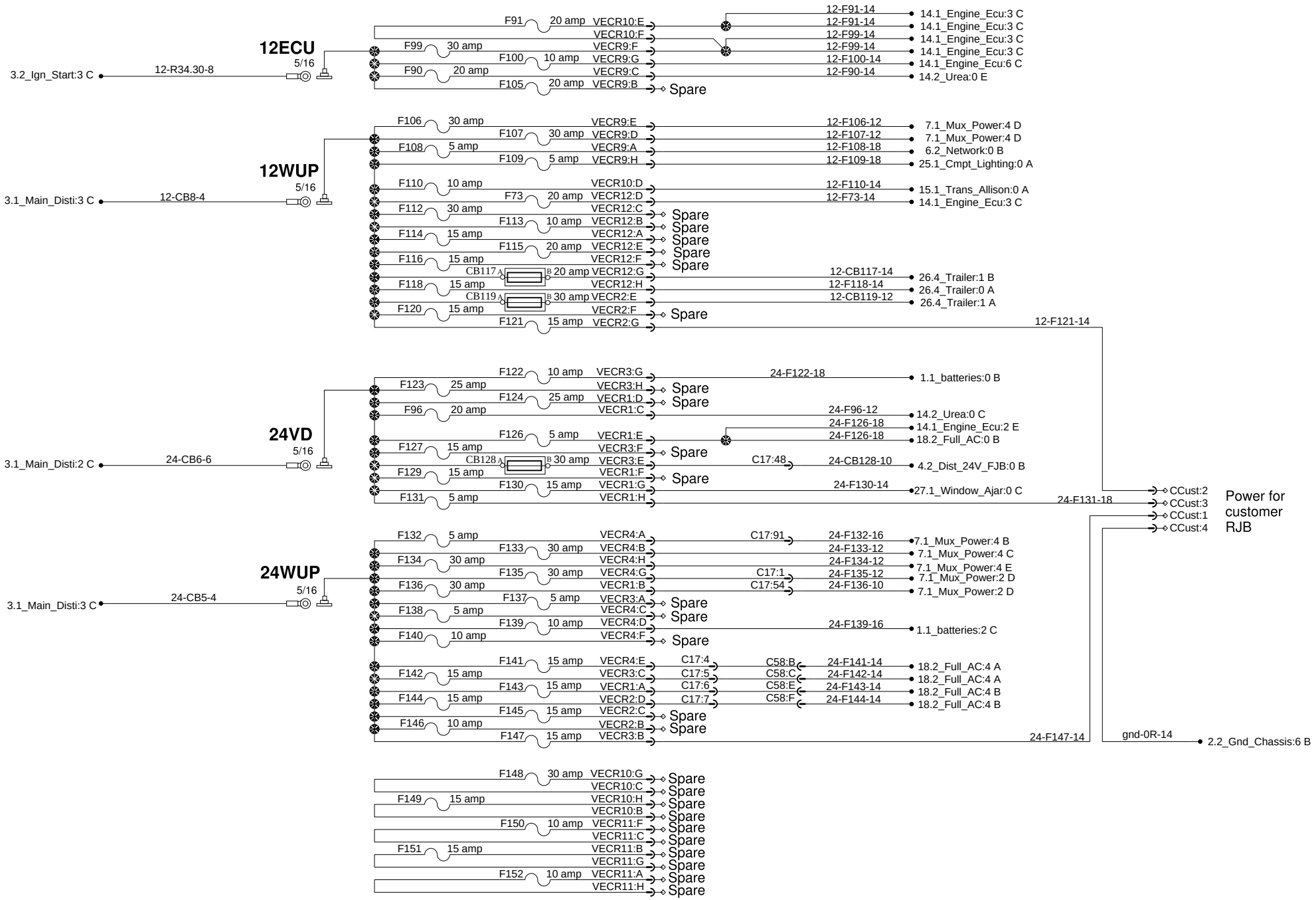

Power distribution rear junction box

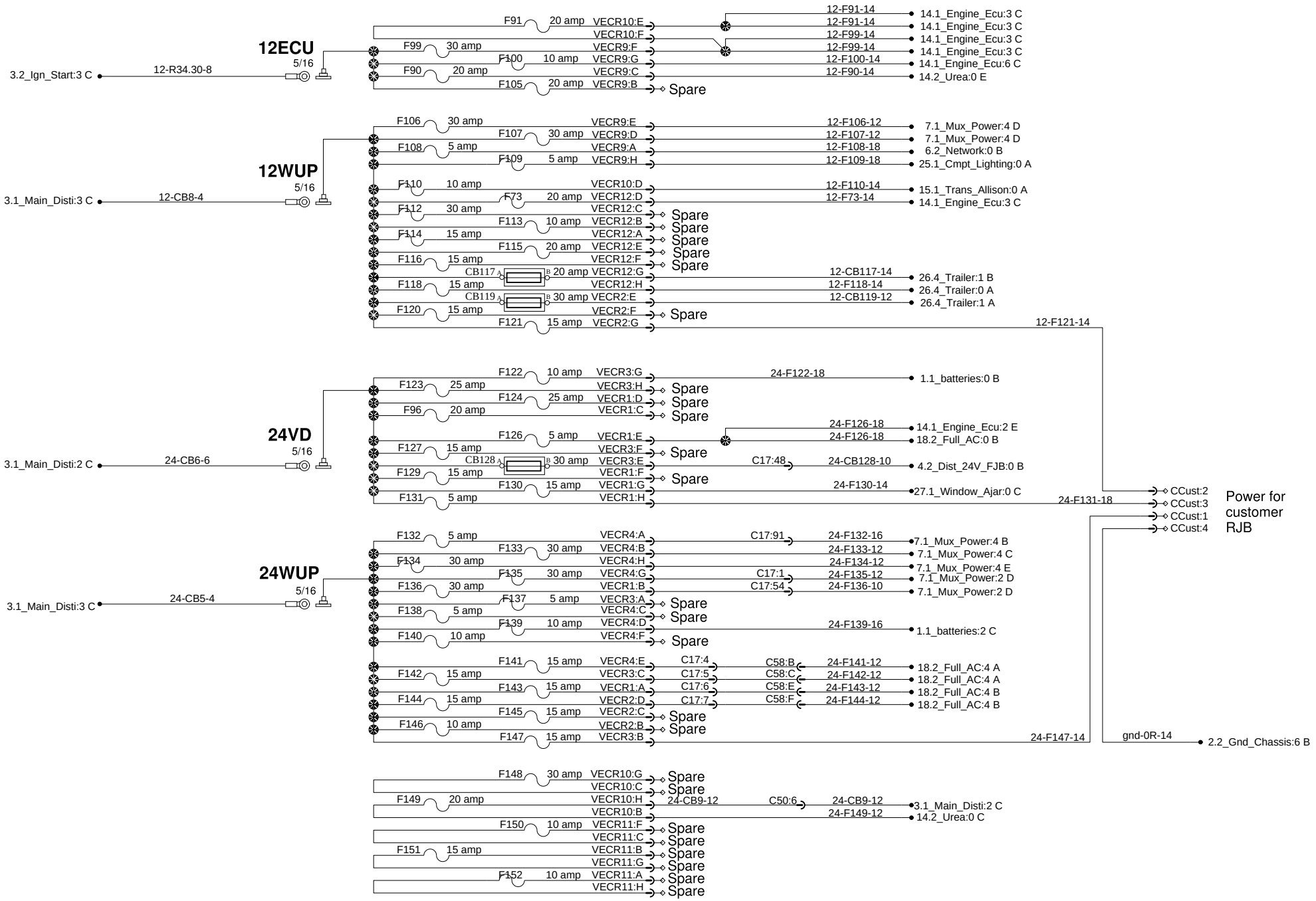

Power distribution rear junction box

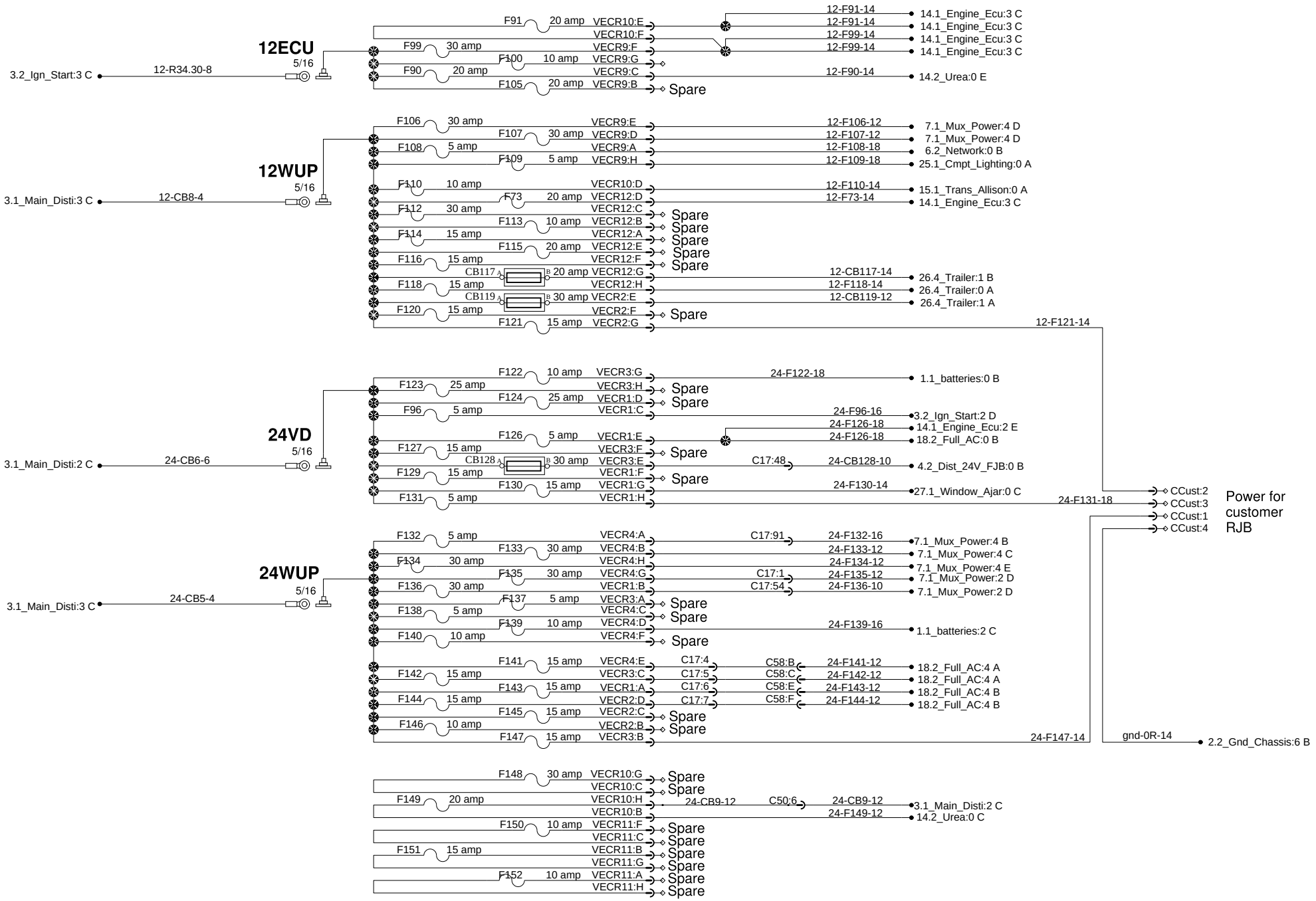

PREVOST®	WIRING DIAGRAM	No:D061670	Page:5.1	Rev:22

Power distribution rear junction box

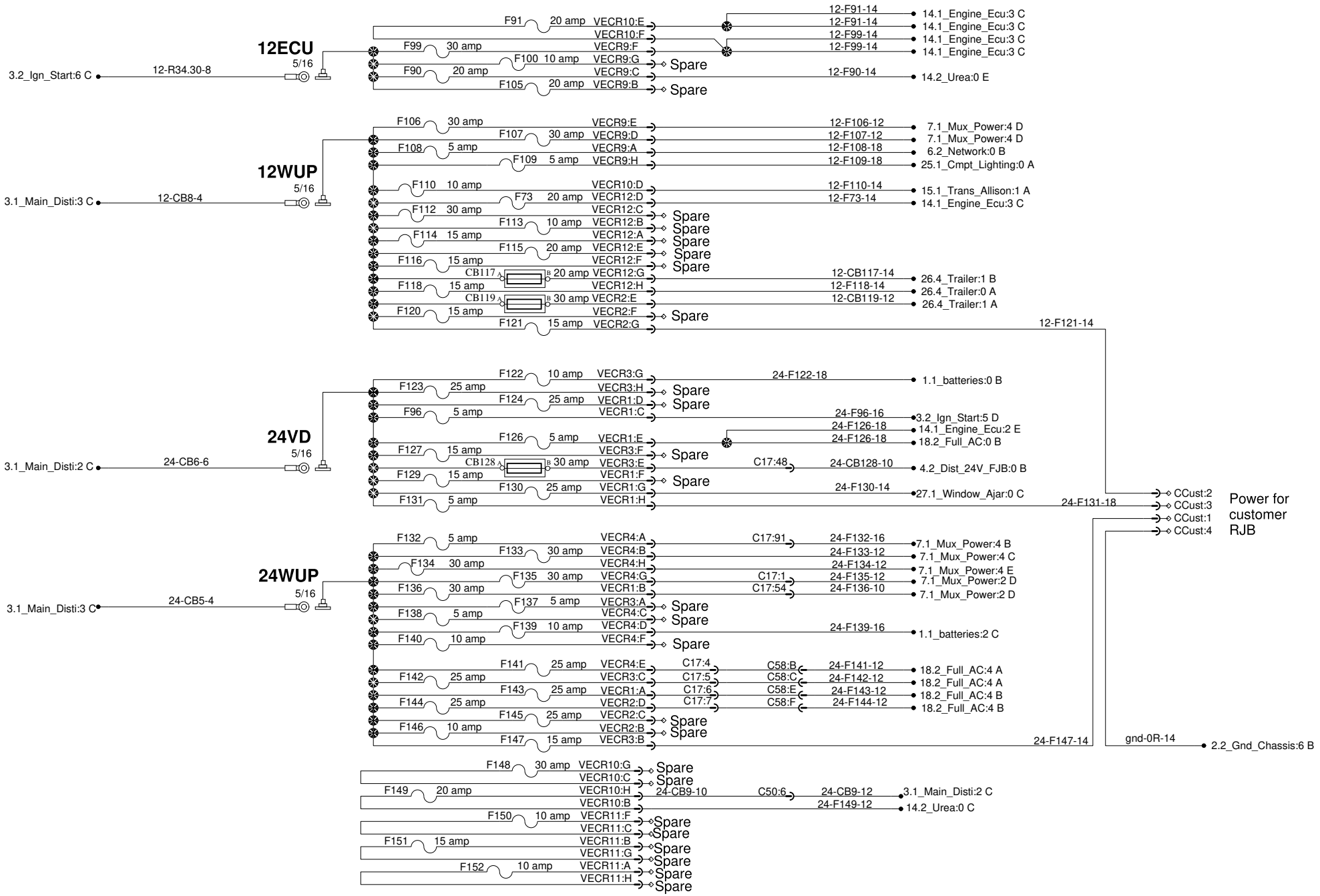

Multiplex Can, J1587, 1939 network and addressing

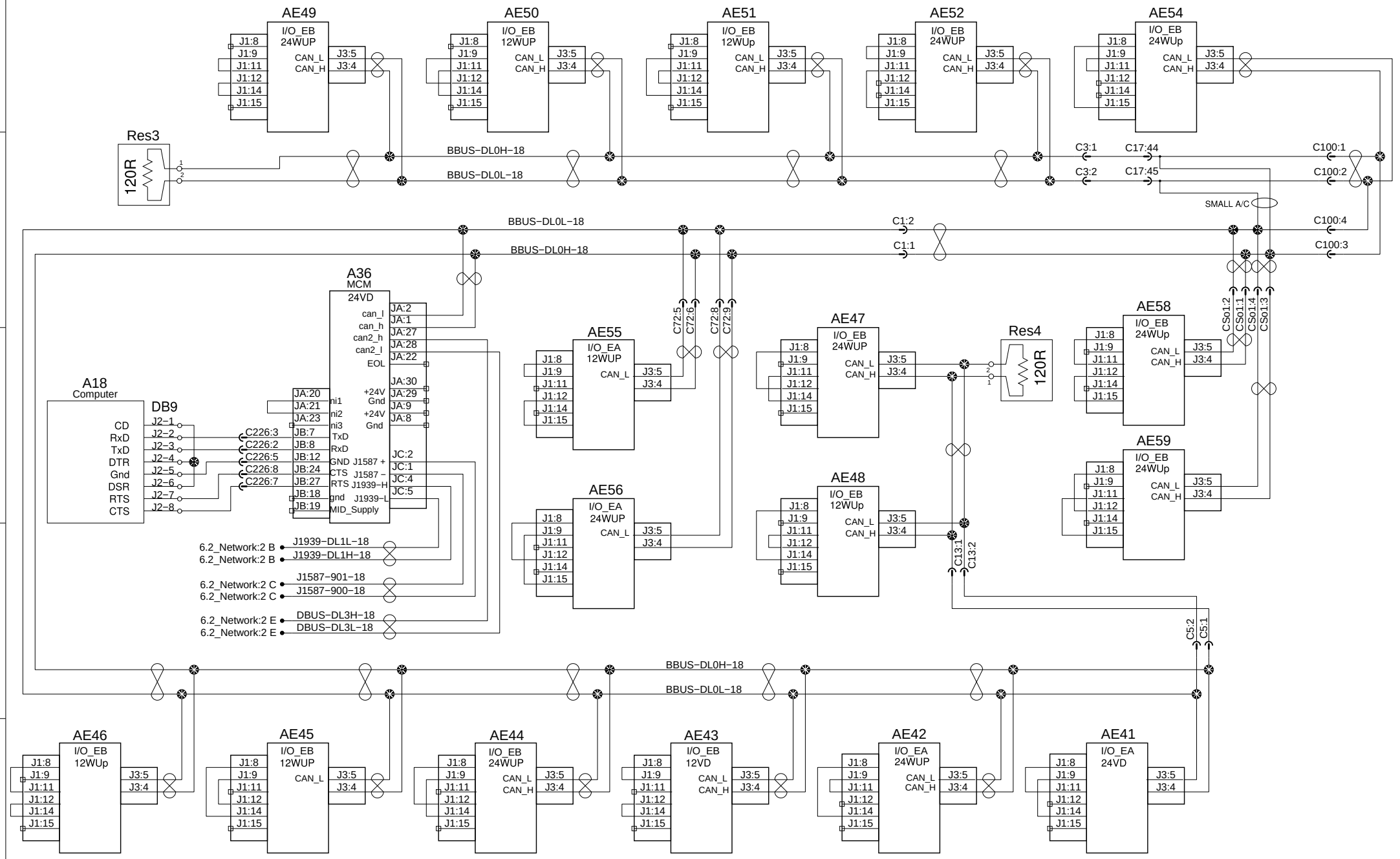

PREVOST®	WIRING DIAGRAM	No:D061670	Page:6.1	Rev:5

Multiplex Can, J1587, 1939 network and addressing

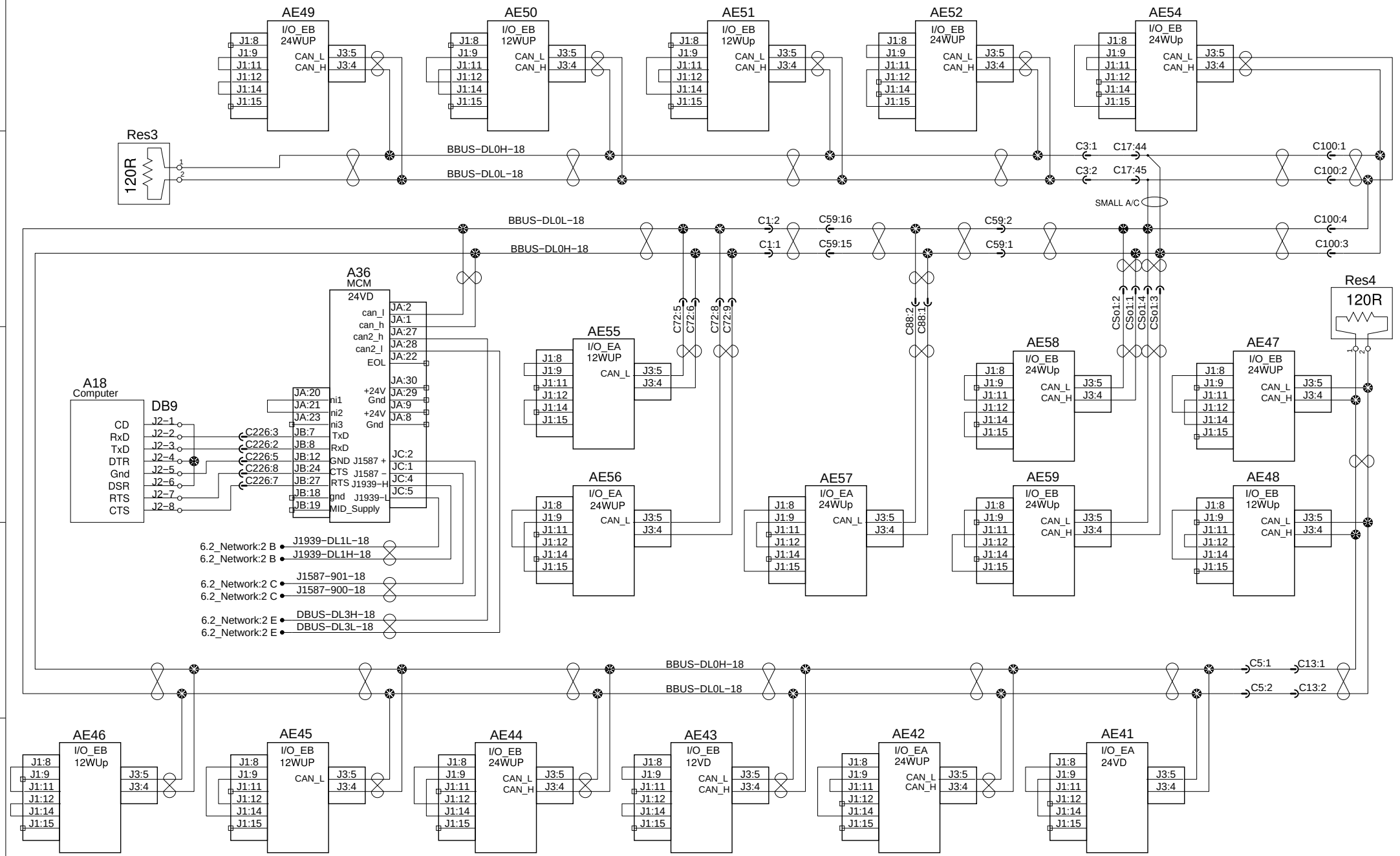

PREVOST®	WIRING DIAGRAM	No:D061670	Page:6.1	Rev:9

Multiplex Can, J1587, 1939 network and addressing

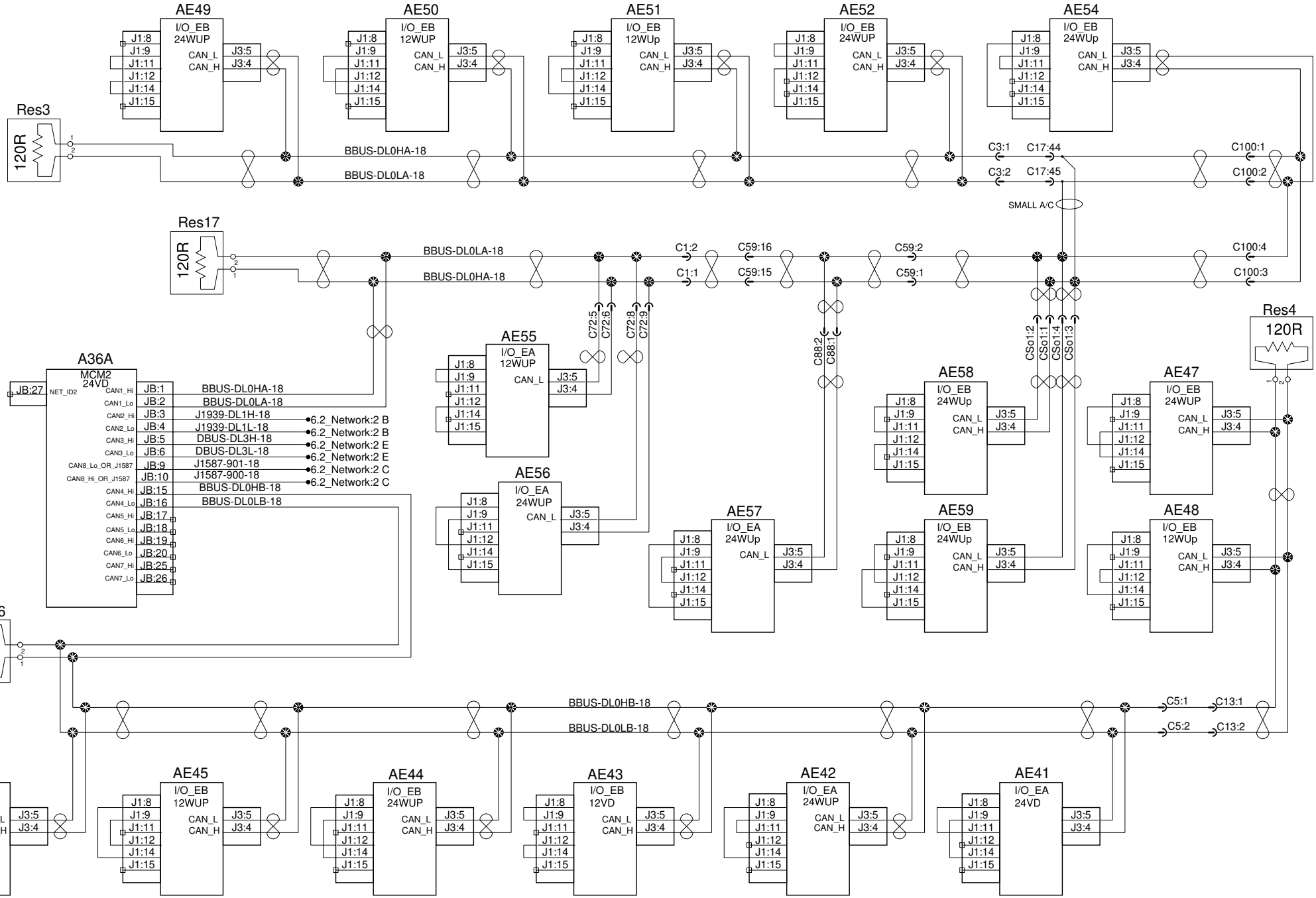

PREVOST®	WIRING DIAGRAM	No:D061670	Page:6.1	Rev:30

J1939, Can Iso J2284, J1587 and DBUS

Open C194 and connect C194spA and C194spB to connect Vansco gateway.

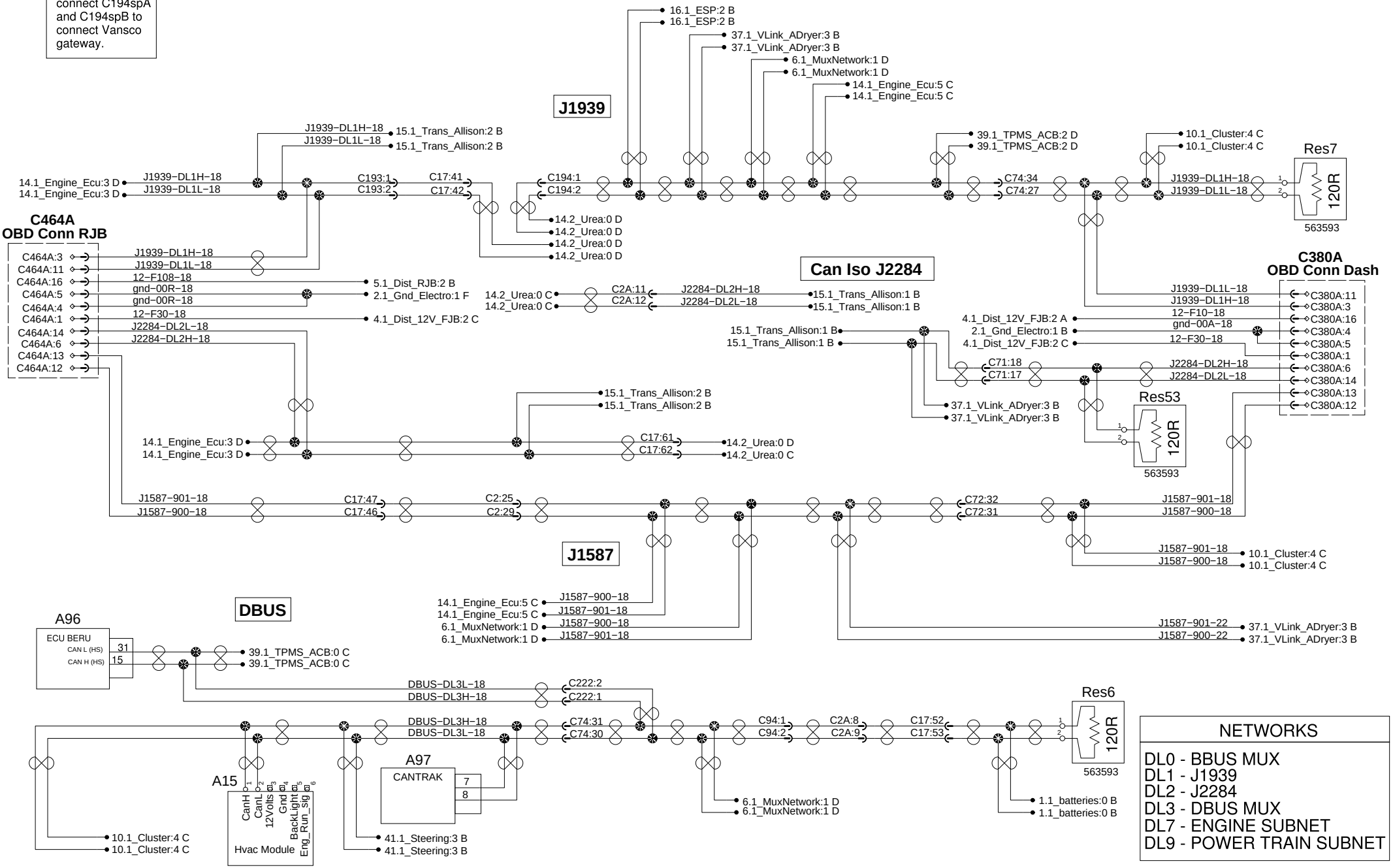

NETWORKS

DL0 - BBUS MUX
DL1 - J1939
DL2 - J2284
DL3 - DBUS MUX
DL7 - ENGINE SUBNET
DL9 - POWER TRAIN SUBNET

J1939, Can Iso J2284, J1587 and DBUS

Open C194 and connect C194spA and C194spB to connect Vansco gateway.

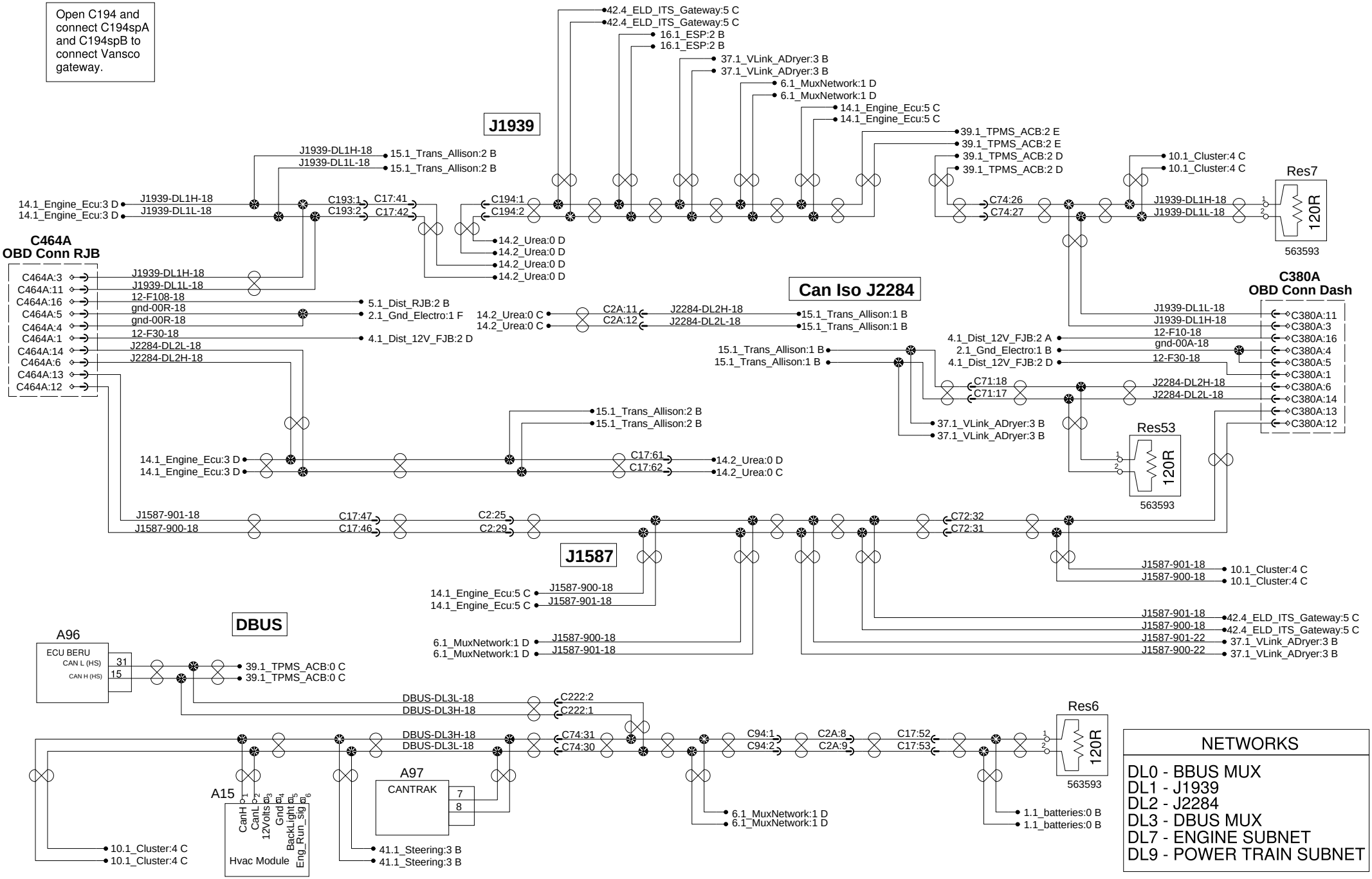

J1939, Can Iso J2284, J1587 and DBUS

Open C194 and connect C194spA and C194spB to connect Vansco gateway.

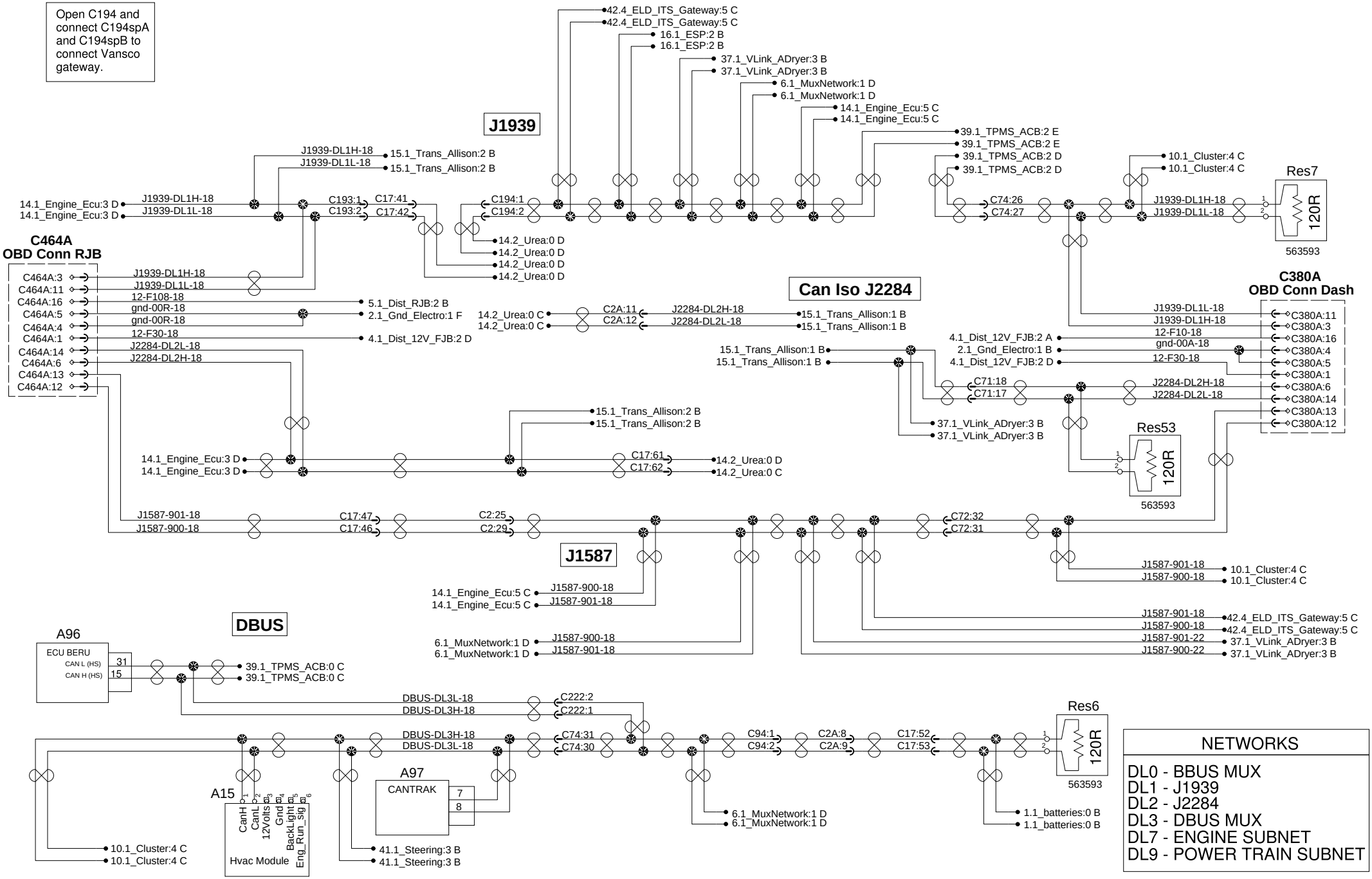

NETWORKS

DL0 - BBUS MUX
DL1 - J1939
DL2 - J2284
DL3 - DBUS MUX
DL7 - ENGINE SUBNET
DL9 - POWER TRAIN SUBNET

J1939, Can Iso J2284, J1587 and DBUS

Open C194 and connect C194spA and C194spB to connect Vansco gateway.

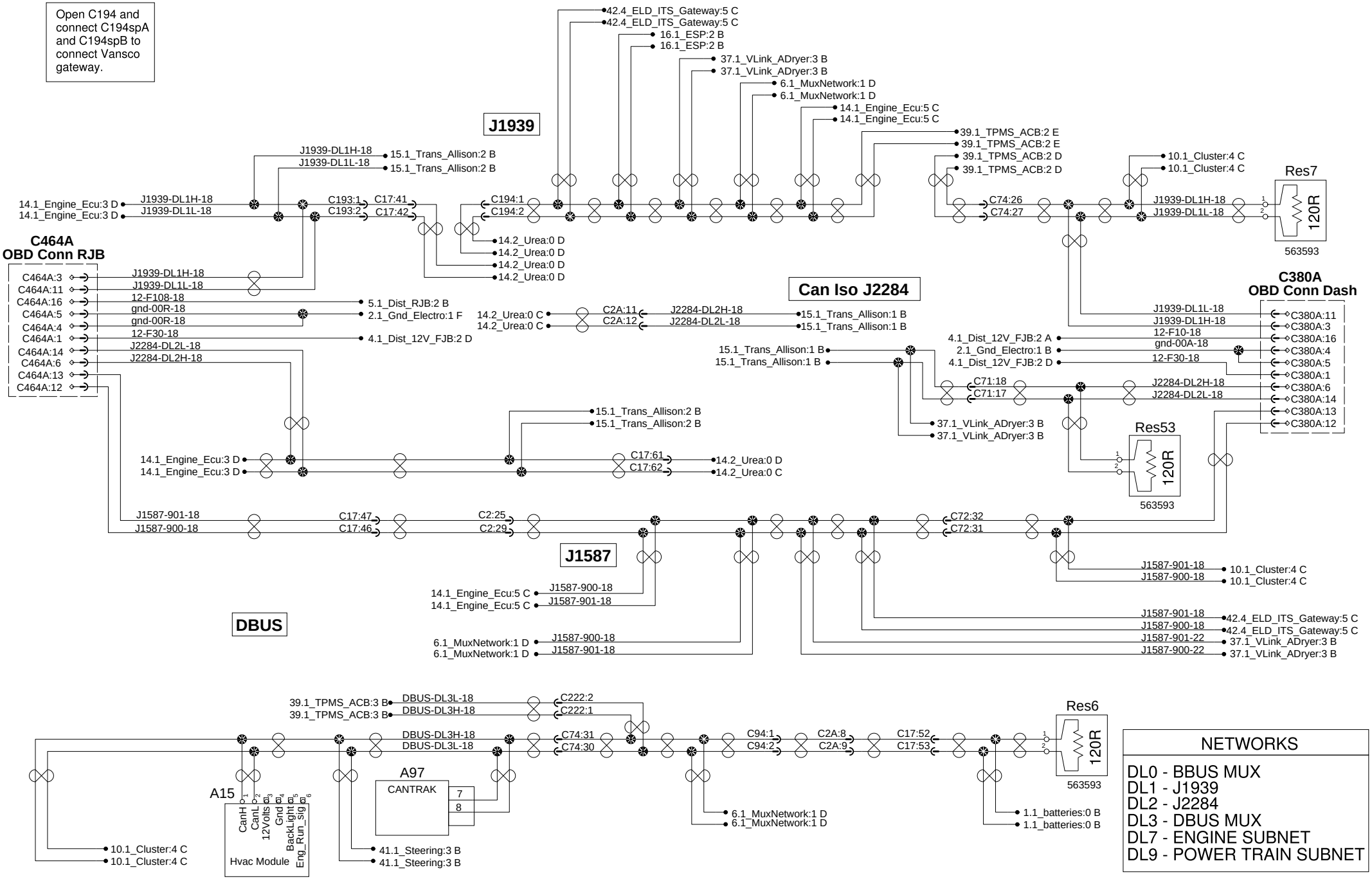

NETWORKS

DL0 - BBUS MUX
DL1 - J1939
DL2 - J2284
DL3 - DBUS MUX
DL7 - ENGINE SUBNET
DL9 - POWER TRAIN SUBNET

J1939, Can Iso J2284, J1587 and DBUS

Open C194 and connect C194spA and C194spB to connect Vansco gateway.

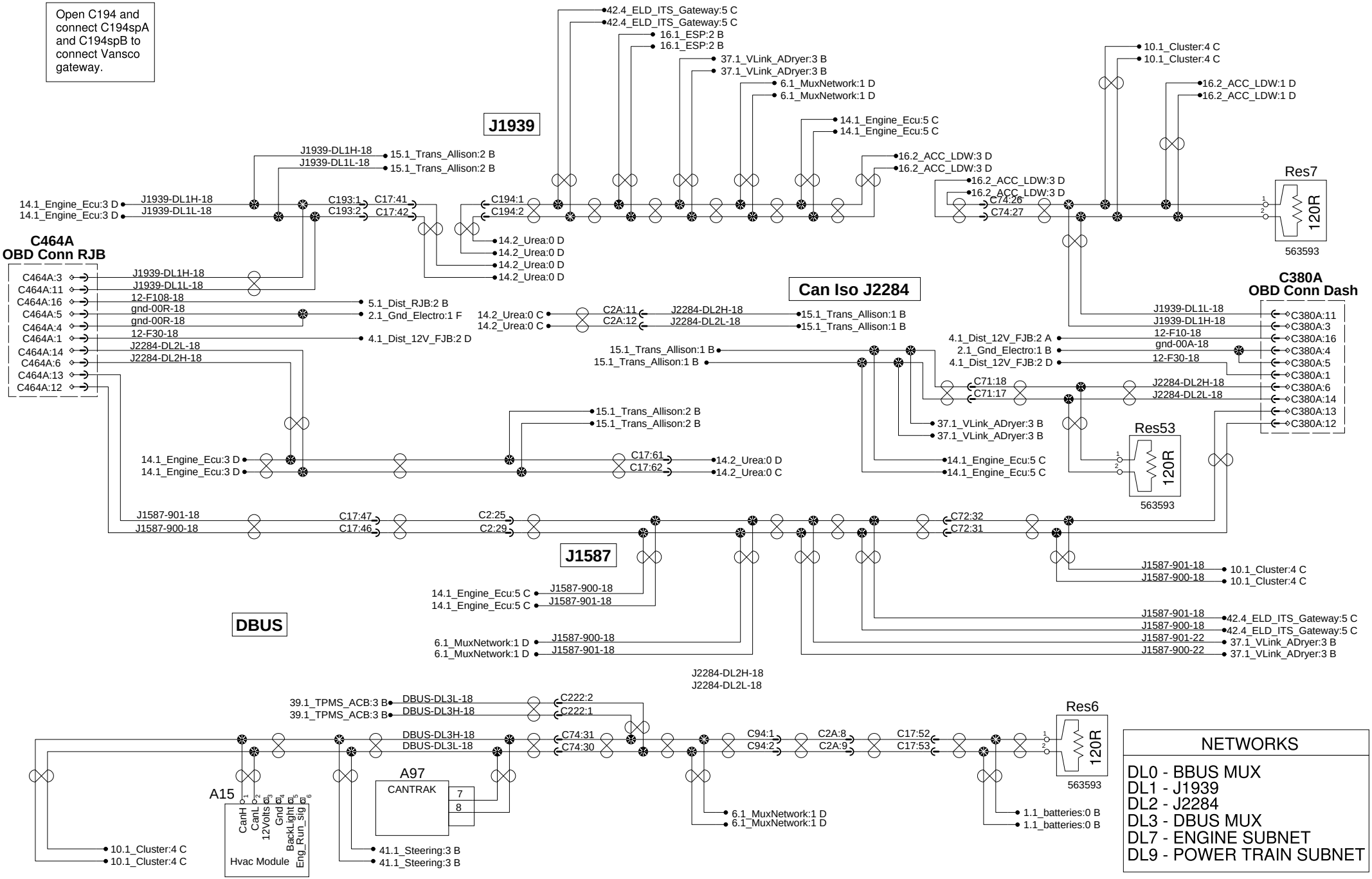

NETWORKS

DL0 - BBUS MUX
DL1 - J1939
DL2 - J2284
DL3 - DBUS MUX
DL7 - ENGINE SUBNET
DL9 - POWER TRAIN SUBNET

J1939, Can Iso J2284, J1587 and DBUS

Open C194 and connect C194spA and C194spB to connect Vansco gateway.

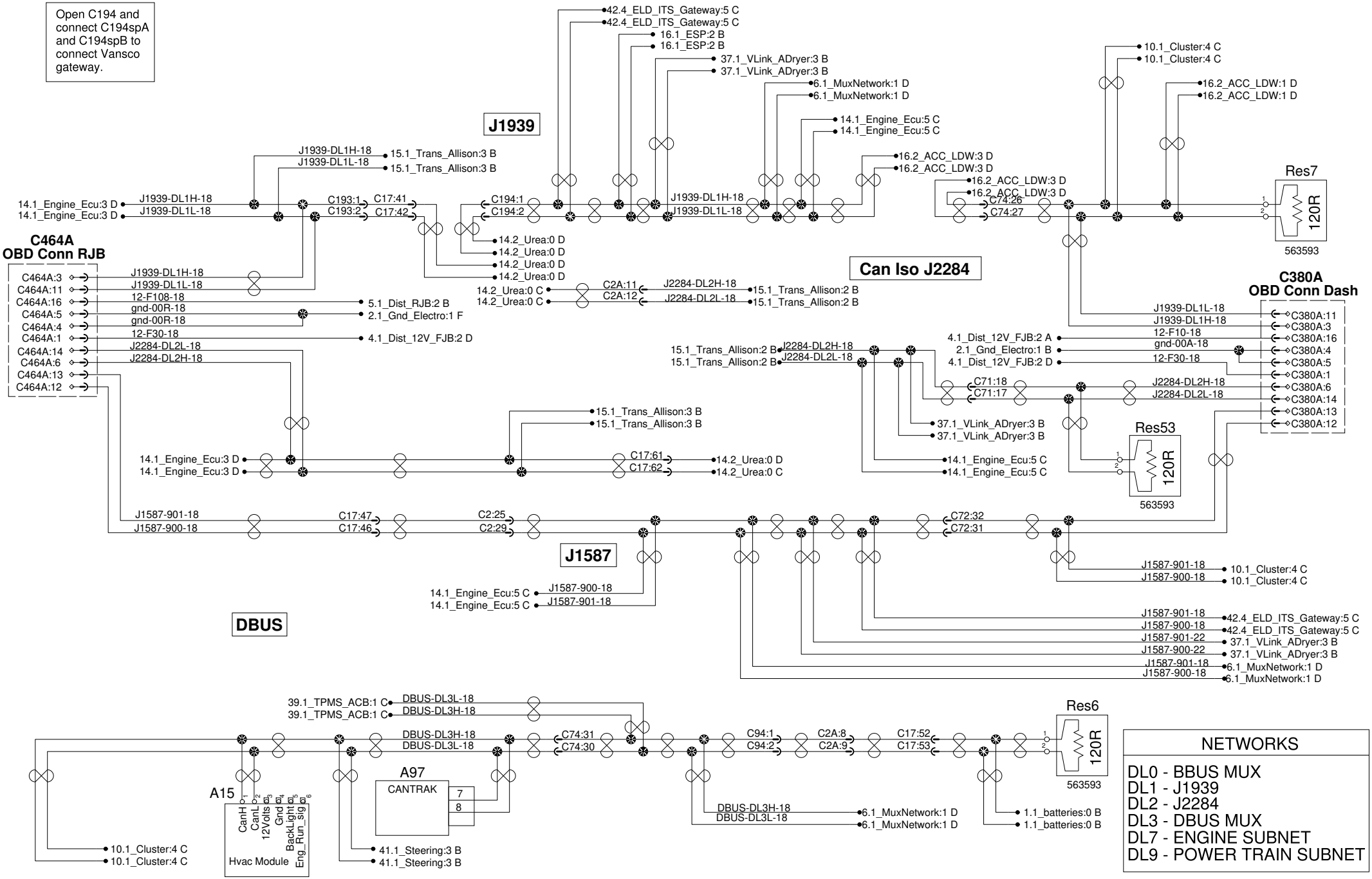

NETWORKS

DL0 - BBUS MUX
DL1 - J1939
DL2 - J2284
DL3 - DBUS MUX
DL7 - ENGINE SUBNET
DL9 - POWER TRAIN SUBNET

Multiplex power supply distribution

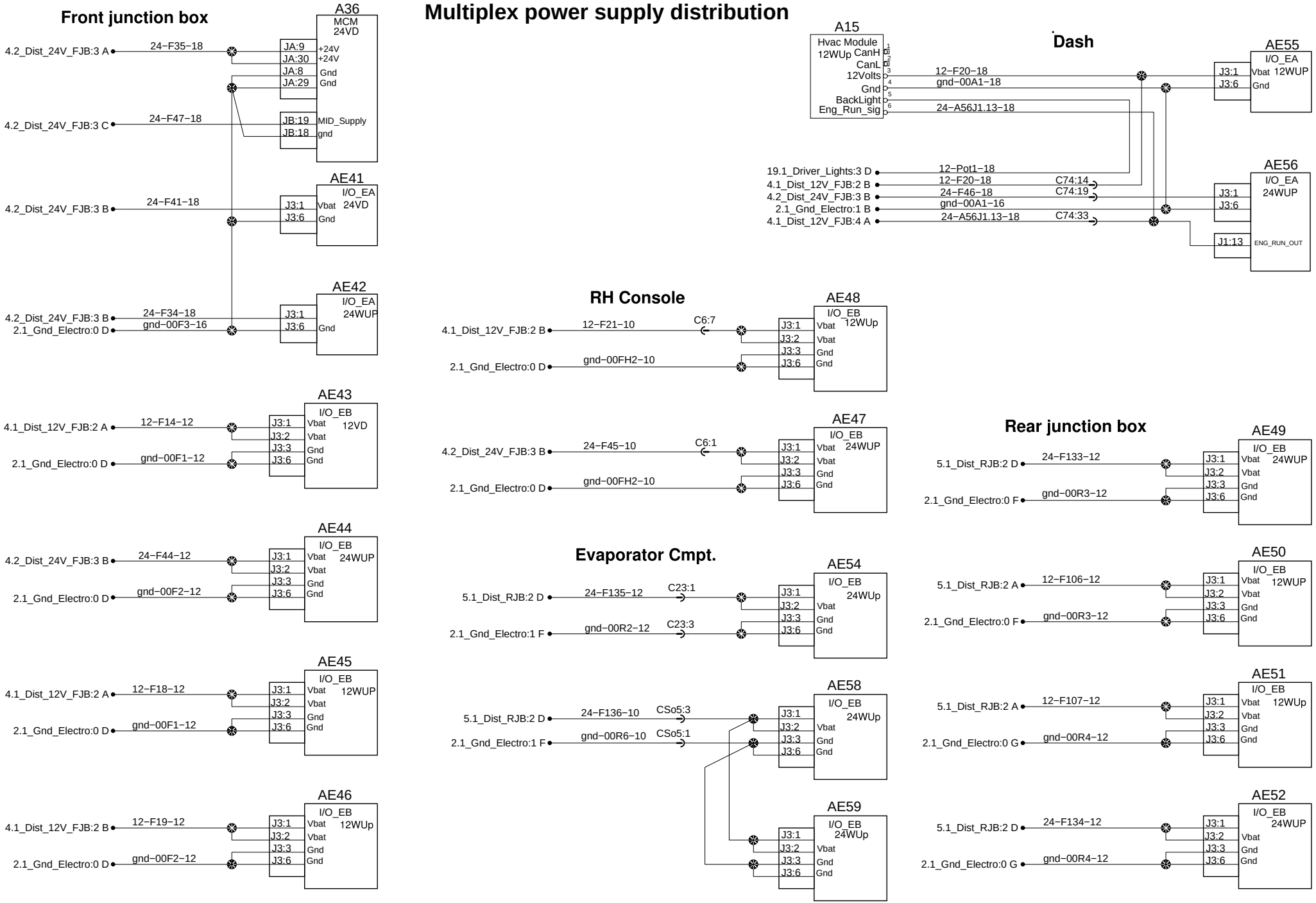

Multiplex power supply distribution

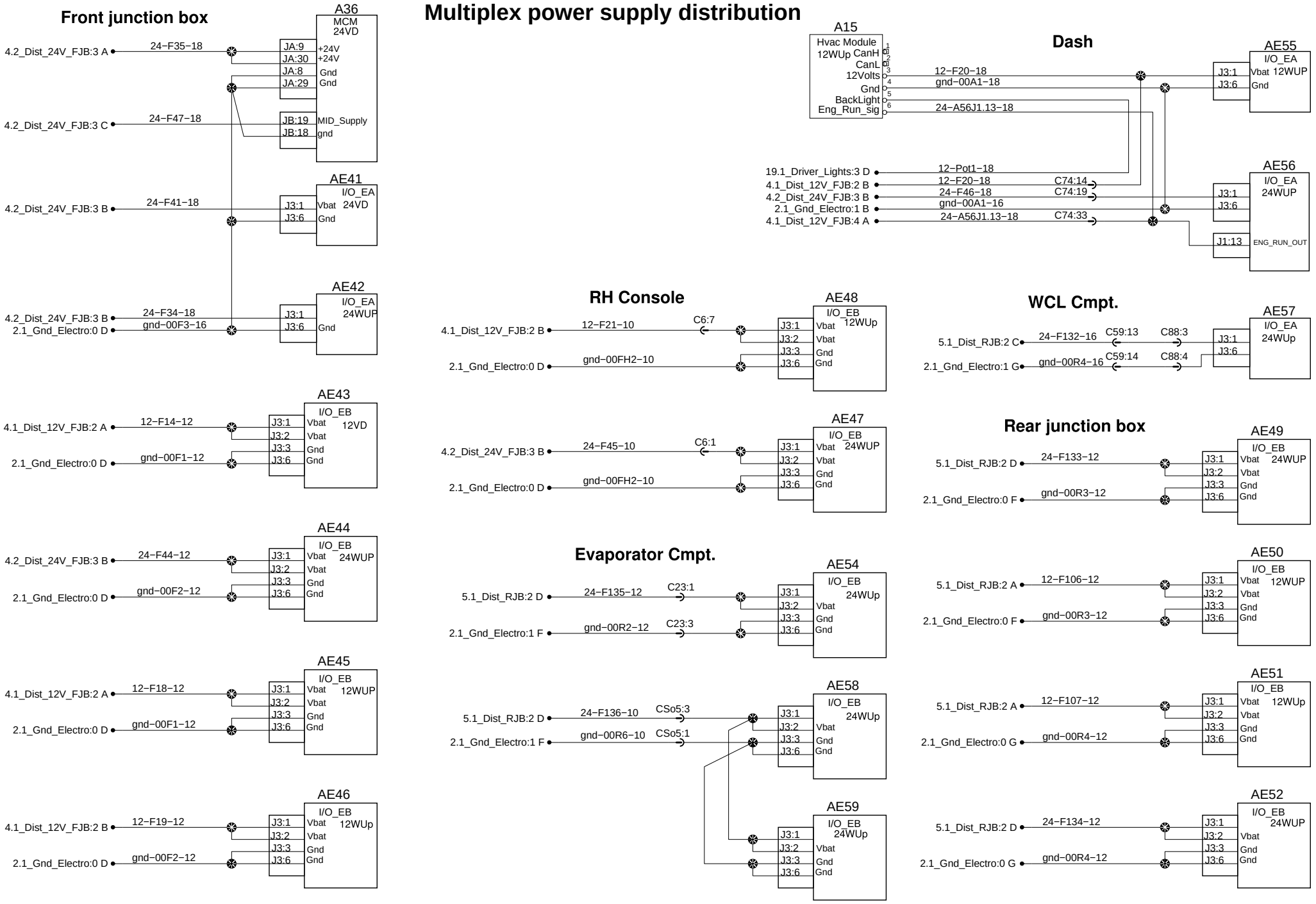

Multiplex power supply distribution

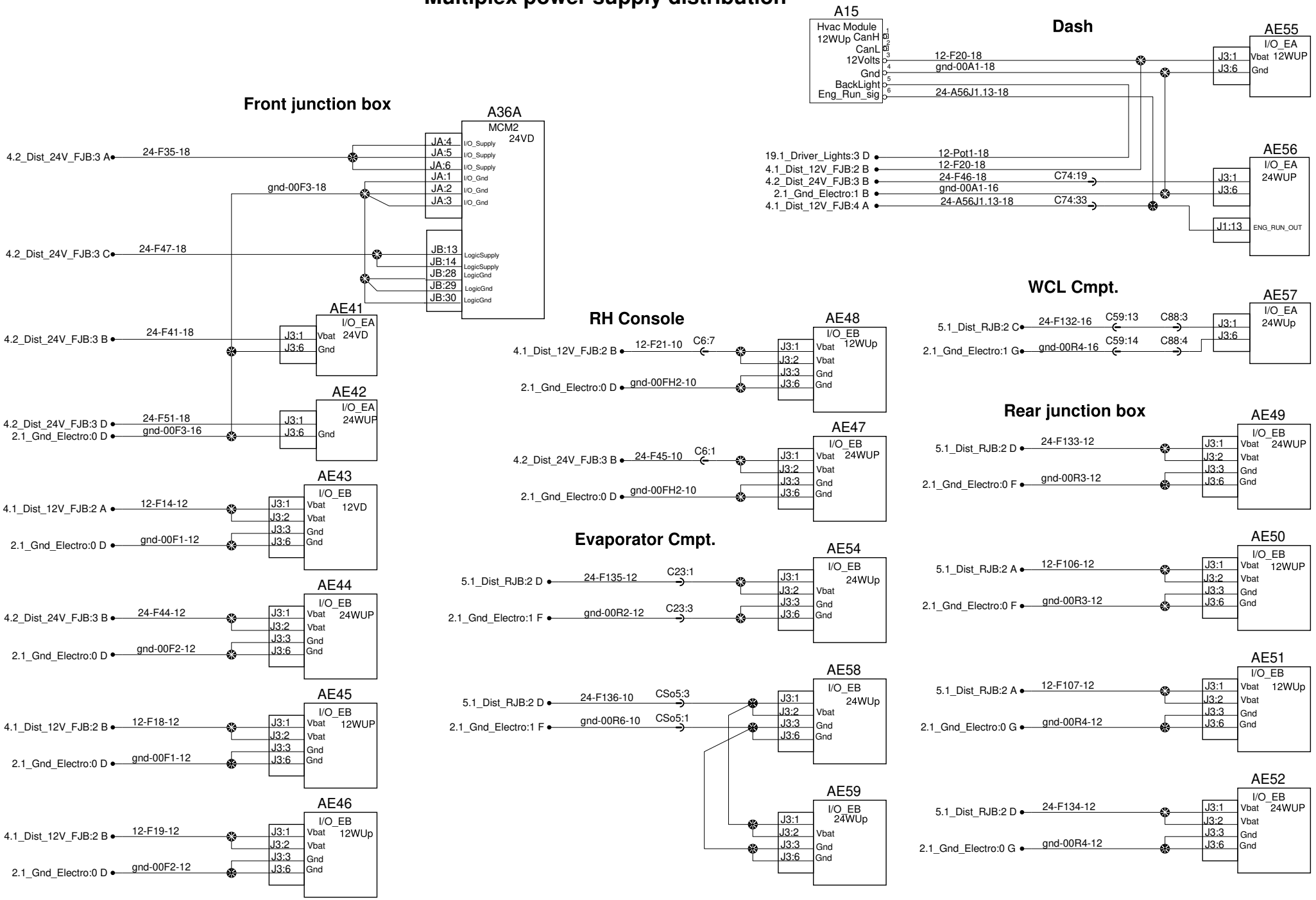

Spares wires

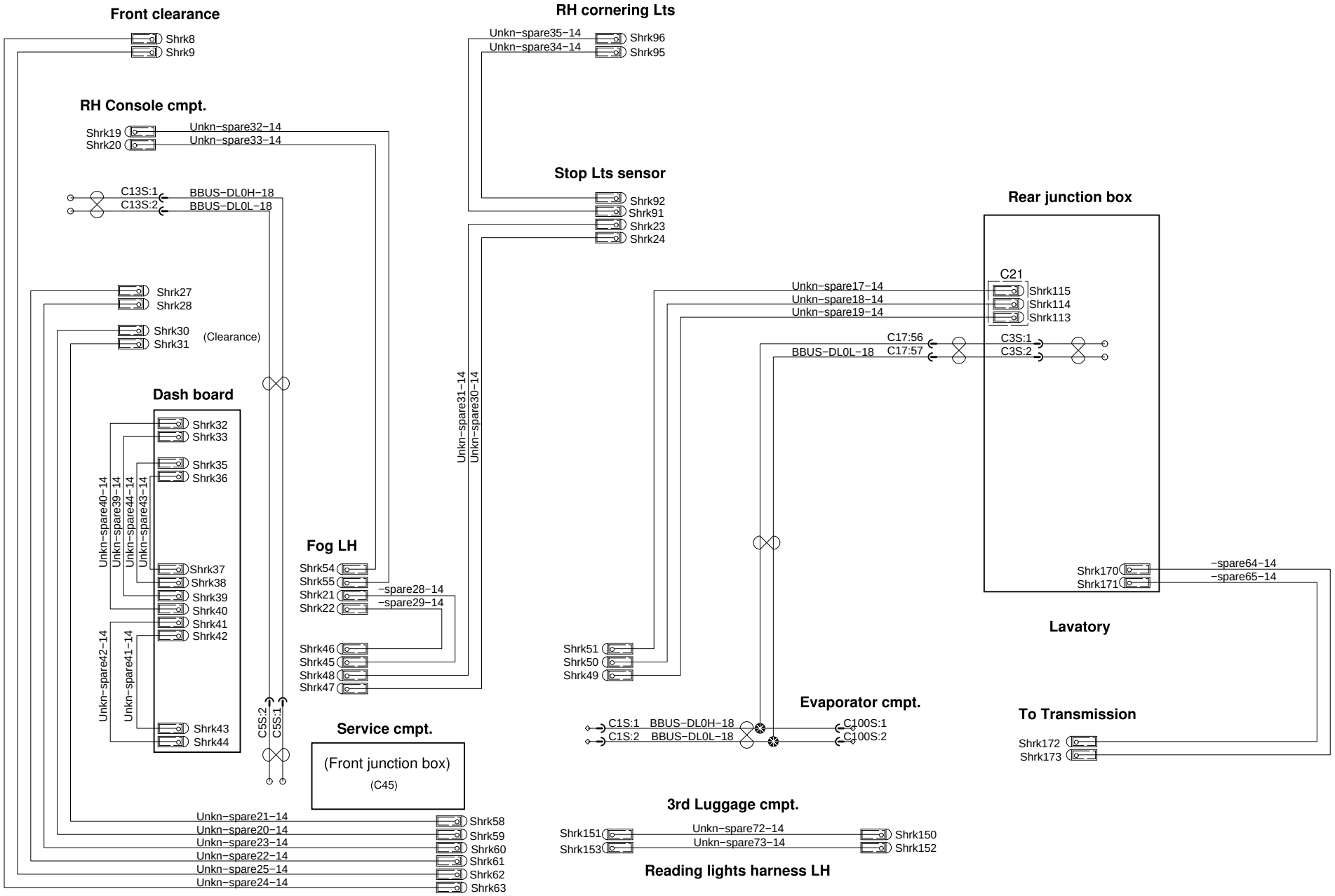

PREVOST®	WIRING DIAGRAM	No:D061670	Page:8.1	Rev:1

Spares wires

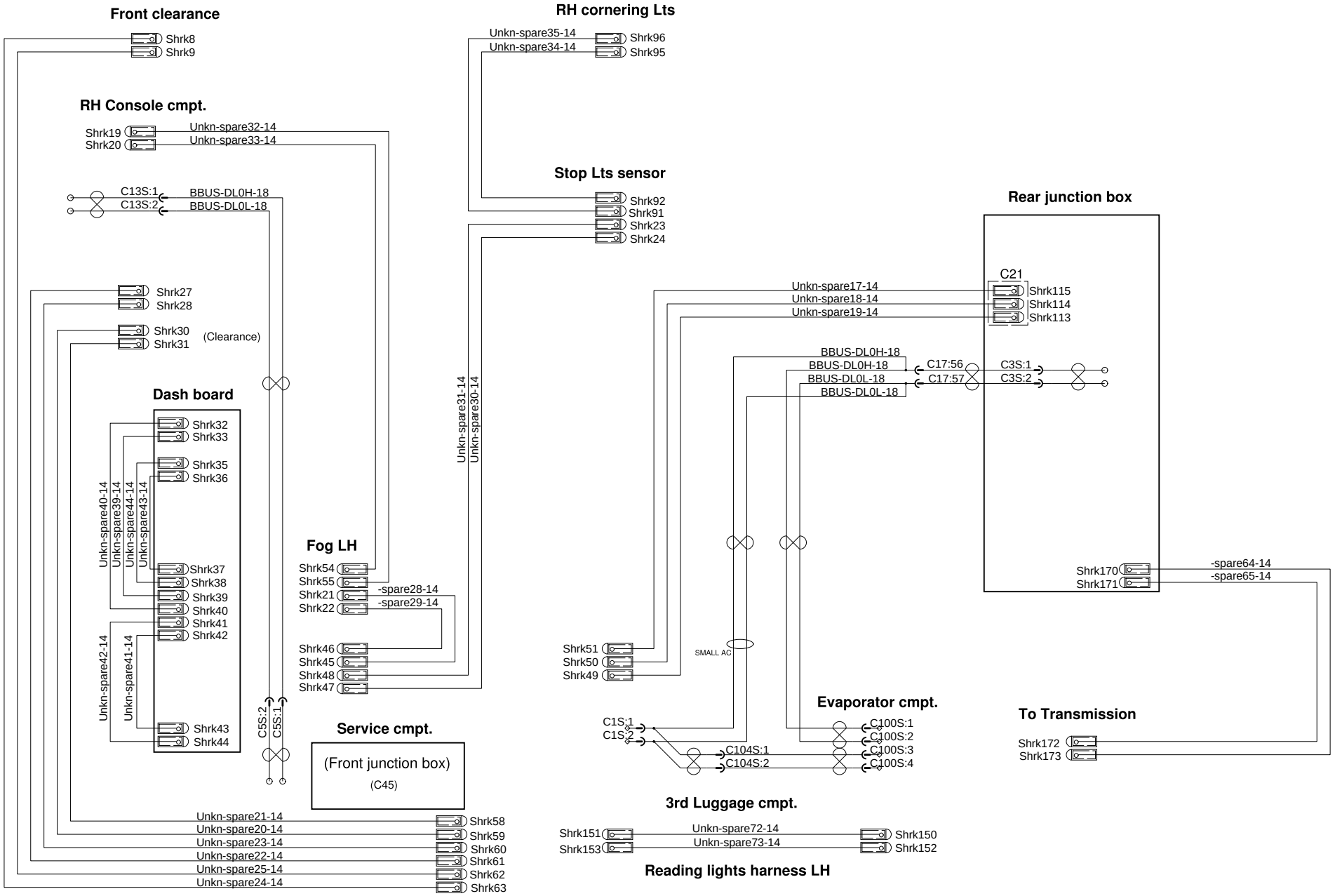

Horn

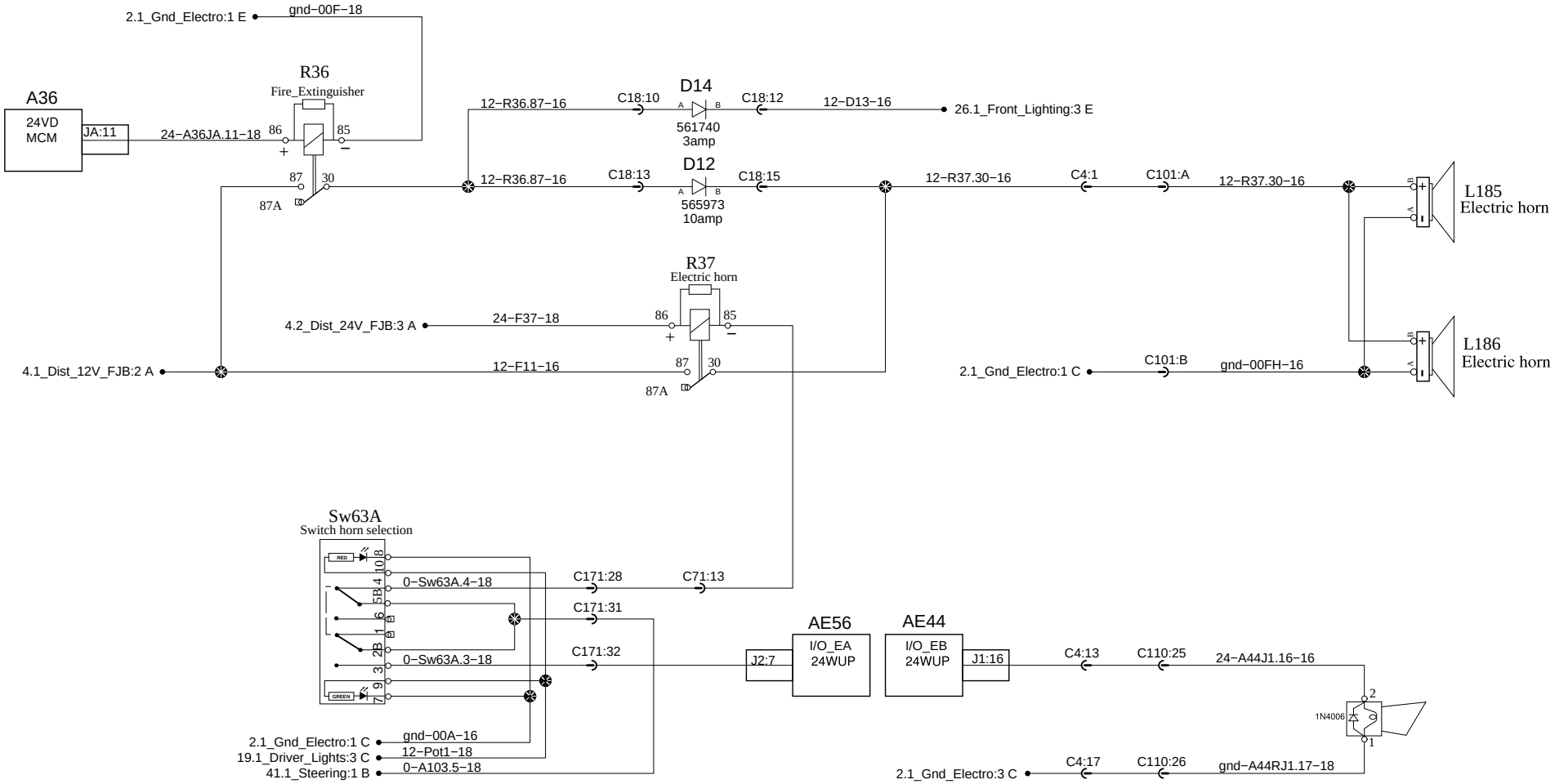
2.1_Gnd_Electro:1 E
gnd−00F−18
R36
Fire_Extinguisher
A36
24VD
MCM
JA:11
24−A36JA.11−18
86
85
87
30
87A
12−R36.87−16
C18:10
D14
A
B
561740
3amp
C18:12
12−D13−16
26.1_Front_Lighting:3 E
C18:13
D12
565973
10amp
C18:15
12−R37.30−16
C4:1
C101:A
L185
Electric horn
R37
Electric horn
4.2_Dist_24V_FJB:3 A
24−F37−18
4.1_Dist_12V_FJB:2 A
12−F11−16
L186
Electric horn
2.1_Gnd_Electro:1 C
C101:B
gnd−00FH−16
Sw63A
Switch horn selection
RED
GREEN
0−Sw63A.4−18
C171:28
C71:13
C171:31
0−Sw63A.3−18
C171:32
AE56
I/O_EA
24WUP
J2:7
AE44
I/O_EB
24WUP
J1:16
C4:13
C110:25
24−A44J1.16−16
1N4006
2.1_Gnd_Electro:1 C
gnd−00A−16
19.1_Driver_Lights:3 C
12−Pot1−18
41.1_Steering:1 B
0−A103.5−18
C4:17
C110:26
gnd−A44RJ1.17−18
2.1_Gnd_Electro:3 C

Horn

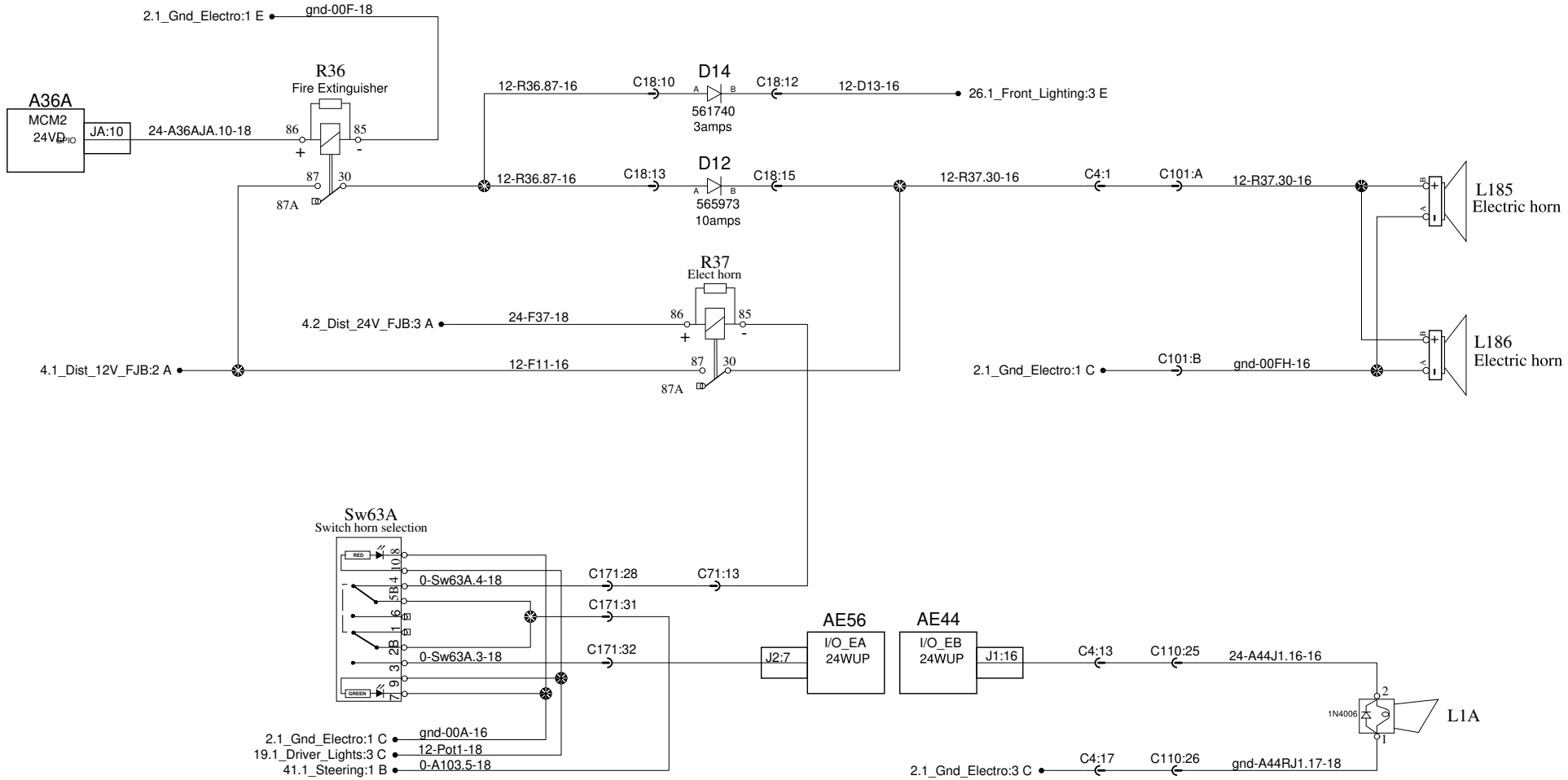
2.1_Gnd_Electro:1 E
gnd-00F-18
R36
Fire Extinguisher
A36A
MCM2
24VDC
JA:10
24-A36AJA.10-18
86
85
87
30
87A
12-R36.87-16
C18:10
D14
C18:12
12-D13-16
26.1_Front_Lighting:3 E
561740
3amps
C18:13
D12
C18:15
565973
10amps
12-R37.30-16
C4:1
C101:A
L185
Electric horn
R37
Elect horn
4.2_Dist_24V_FJB:3 A
24-F37-18
4.1_Dist_12V_FJB:2 A
12-F11-16
L186
Electric horn
2.1_Gnd_Electro:1 C
C101:B
gnd-00FH-16
Sw63A
Switch horn selection
RED
GREEN
0-Sw63A.4-18
0-Sw63A.3-18
C171:28
C71:13
C171:31
C171:32
AE56
I/O_EA
24WUP
J2:7
AE44
I/O_EB
24WUP
J1:16
C4:13
C110:25
24-A44J1.16-16
1N4006
L1A
2.1_Gnd_Electro:1 C
19.1_Driver_Lights:3 C
41.1_Steering:1 B
gnd-00A-16
12-Pot1-18
0-A103.5-18
2.1_Gnd_Electro:3 C
C4:17
C110:26
gnd-A44RJ1.17-18

Cluster

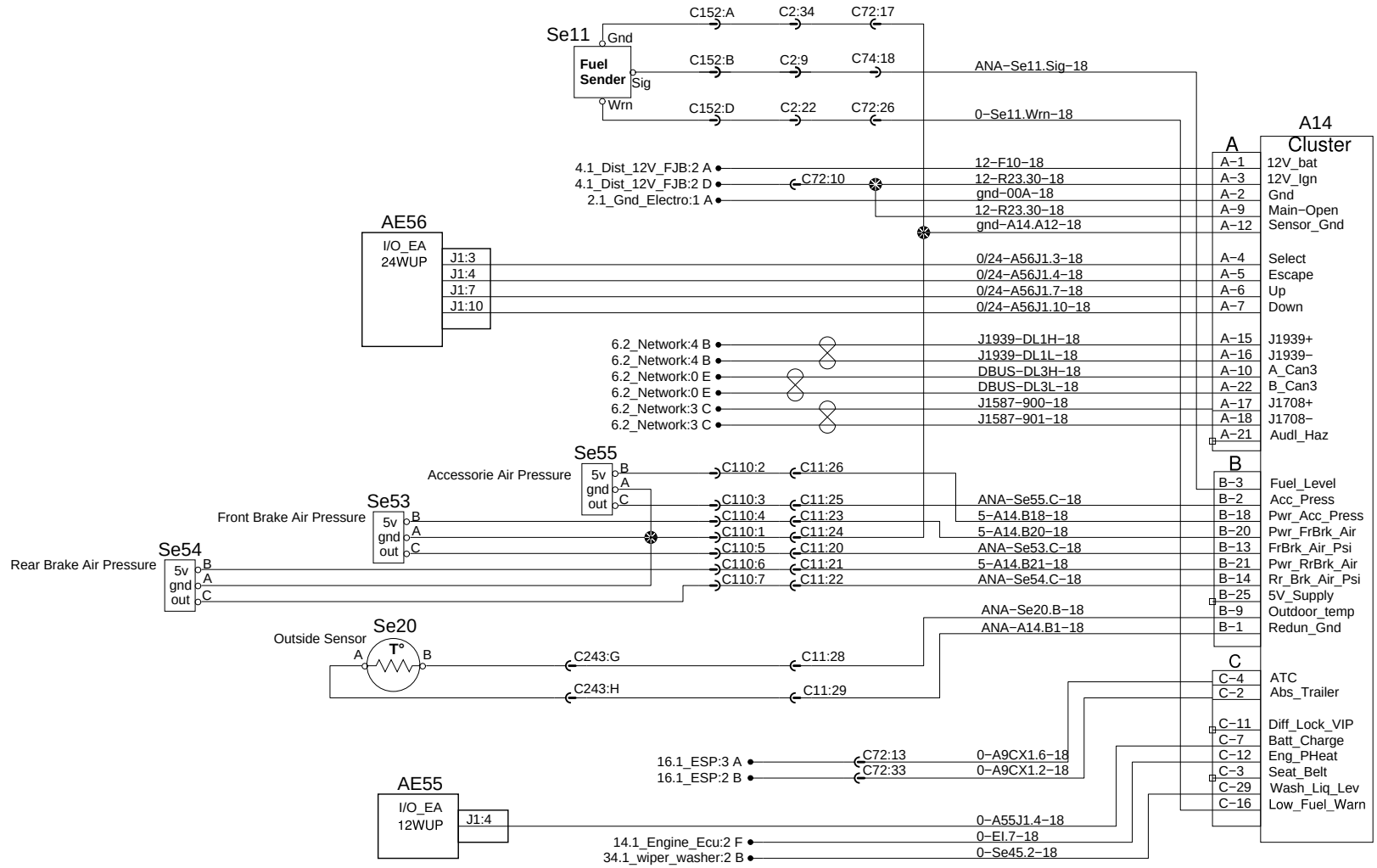
Se11
Gnd
Fuel Sender
Sig
Wrn
C152:A
C2:34
C72:17
C152:B
C2:9
C74:18
C152:D
C2:22
C72:26
ANA−Se11.Sig−18
0−Se11.Wrn−18
A14 Cluster
A
4.1_Dist_12V_FJB:2 A
4.1_Dist_12V_FJB:2 D
2.1_Gnd_Electro:1 A
C72:10
12−F10−18
12−R23.30−18
gnd−00A−18
12−R23.30−18
gnd−A14.A12−18
A−1 12V_bat
A−3 12V_Ign
A−2 Gnd
A−9 Main−Open
A−12 Sensor_Gnd
AE56
I/O_EA 24WUP
J1:3
J1:4
J1:7
J1:10
0/24−A56J1.3−18
0/24−A56J1.4−18
0/24−A56J1.7−18
0/24−A56J1.10−18
A−4 Select
A−5 Escape
A−6 Up
A−7 Down
6.2_Network:4 B
6.2_Network:4 B
6.2_Network:0 E
6.2_Network:0 E
6.2_Network:3 C
6.2_Network:3 C
J1939−DL1H−18
J1939−DL1L−18
DBUS−DL3H−18
DBUS−DL3L−18
J1587−900−18
J1587−901−18
A−15 J1939+
A−16 J1939−
A−10 A_Can3
A−22 B_Can3
A−17 J1708+
A−18 J1708−
A−21 Audl_Haz
Se55
Accessorie Air Pressure
5v
gnd
out
B
A
C
C110:2
C110:3
C110:4
C110:1
C110:5
C110:6
C110:7
C11:26
C11:25
C11:23
C11:24
C11:20
C11:21
C11:22
B
ANA−Se55.C−18
5−A14.B18−18
5−A14.B20−18
ANA−Se53.C−18
5−A14.B21−18
ANA−Se54.C−18
B−3 Fuel_Level
B−2 Acc_Press
B−18 Pwr_Acc_Press
B−20 Pwr_FrBrk_Air
B−13 FrBrk_Air_Psi
B−21 Pwr_RrBrk_Air
B−14 Rr_Brk_Air_Psi
Se53
Front Brake Air Pressure
Se54
Rear Brake Air Pressure
B−25 5V_Supply
B−9 Outdoor_temp
B−1 Redun_Gnd
Se20
Outside Sensor
T°
A
B
C243:G
C243:H
C11:28
C11:29
ANA−Se20.B−18
ANA−A14.B1−18
C
C−4 ATC
C−2 Abs_Trailer
C−11 Diff_Lock_VIP
C−7 Batt_Charge
C−12 Eng_PHeat
C−3 Seat_Belt
C−29 Wash_Liq_Lev
C−16 Low_Fuel_Warn
16.1_ESP:3 A
16.1_ESP:2 B
C72:13
C72:33
0−A9CX1.6−18
0−A9CX1.2−18
AE55
I/O_EA 12WUP
J1:4
0−A55J1.4−18
14.1_Engine_Ecu:2 F
34.1_wiper_washer:2 B
0−EI.7−18
0−Se45.2−18

Cluster

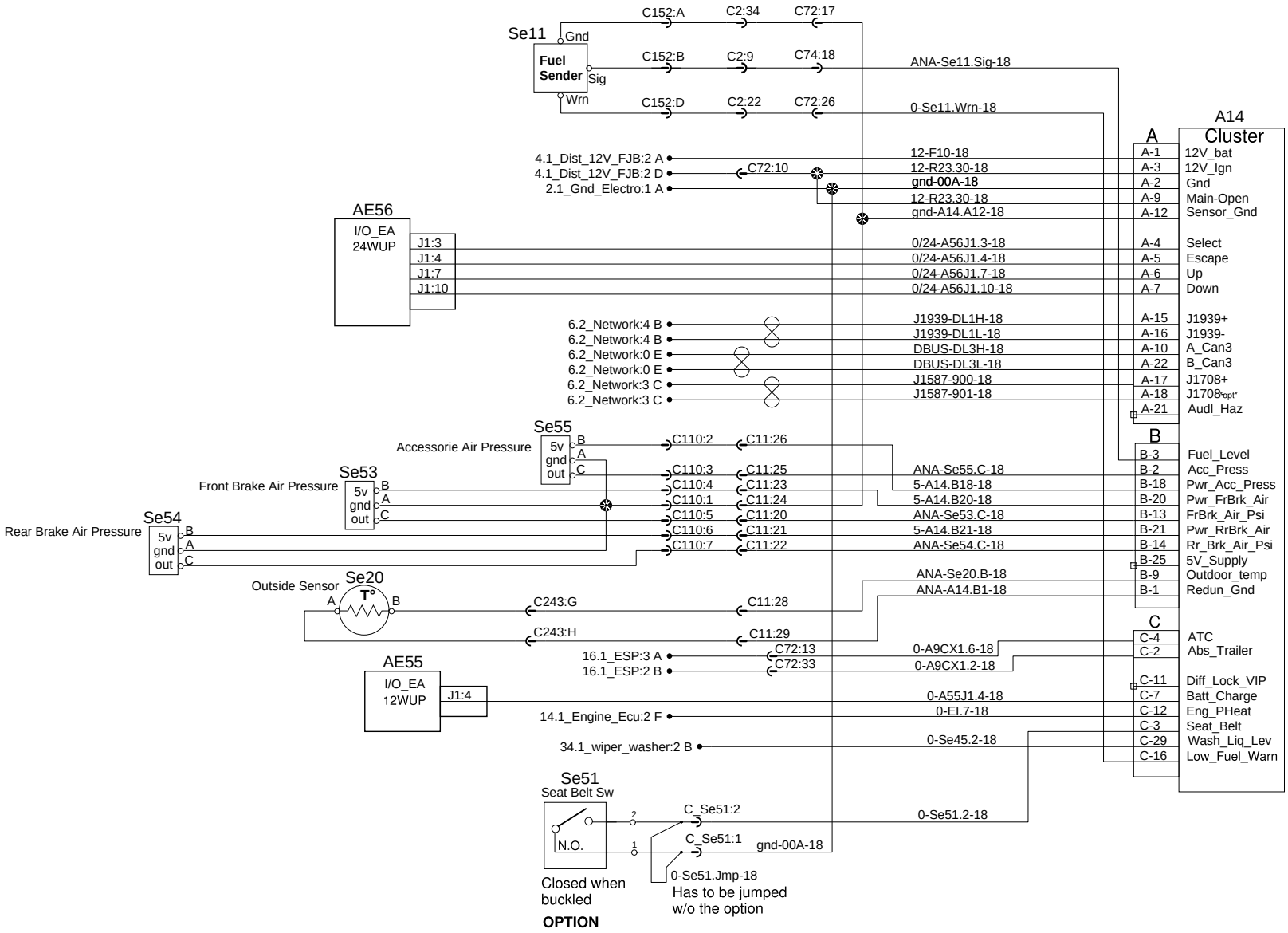
Se11
Fuel Sender
Gnd
Sig
Wrn
C152:A
C2:34
C72:17
C152:B
C2:9
C74:18
C152:D
C2:22
C72:26
ANA-Se11.Sig-18
0-Se11.Wrn-18
A14
Cluster
A
4.1_Dist_12V_FJB:2 A
4.1_Dist_12V_FJB:2 D
2.1_Gnd_Electro:1 A
C72:10
12-F10-18
12-R23.30-18
gnd-00A-18
12-R23.30-18
gnd-A14.A12-18
A-1 12V_bat
A-3 12V_Ign
A-2 Gnd
A-9 Main-Open
A-12 Sensor_Gnd
AE56
I/O_EA
24WUP
J1:3
J1:4
J1:7
J1:10
0/24-A56J1.3-18
0/24-A56J1.4-18
0/24-A56J1.7-18
0/24-A56J1.10-18
A-4 Select
A-5 Escape
A-6 Up
A-7 Down
6.2_Network:4 B
6.2_Network:4 B
6.2_Network:0 E
6.2_Network:0 E
6.2_Network:3 C
6.2_Network:3 C
J1939-DL1H-18
J1939-DL1L-18
DBUS-DL3H-18
DBUS-DL3L-18
J1587-900-18
J1587-901-18
A-15 J1939+
A-16 J1939-
A-10 A_Can3
A-22 B_Can3
A-17 J1708+
A-18 J1708opt*
A-21 Audl_Haz
Se55
5v
gnd
out
Accessorie Air Pressure
C110:2
C11:26
B
Se53
Front Brake Air Pressure
C110:3
C110:4
C110:1
C11:25
C11:23
C11:24
ANA-Se55.C-18
5-A14.B18-18
5-A14.B20-18
Se54
Rear Brake Air Pressure
C110:5
C110:6
C110:7
C11:20
C11:21
C11:22
ANA-Se53.C-18
5-A14.B21-18
ANA-Se54.C-18
B
B-3 Fuel_Level
B-2 Acc_Press
B-18 Pwr_Acc_Press
B-20 Pwr_FrBrk_Air
B-13 FrBrk_Air_Psi
B-21 Pwr_RrBrk_Air
B-14 Rr_Brk_Air_Psi
B-25 5V_Supply
B-9 Outdoor_temp
B-1 Redun_Gnd
Se20
Outside Sensor
T°
A
B
C243:G
C243:H
C11:28
C11:29
ANA-Se20.B-18
ANA-A14.B1-18
C
C-4 ATC
C-2 Abs_Trailer
C-11 Diff_Lock_VIP
C-7 Batt_Charge
C-12 Eng_PHeat
C-3 Seat_Belt
C-29 Wash_Liq_Lev
C-16 Low_Fuel_Warn
16.1_ESP:3 A
16.1_ESP:2 B
C72:13
C72:33
0-A9CX1.6-18
0-A9CX1.2-18
AE55
I/O_EA
12WUP
J1:4
0-A55J1.4-18
0-EI.7-18
14.1_Engine_Ecu:2 F
34.1_wiper_washer:2 B
0-Se45.2-18
Se51
Seat Belt Sw
N.O.
C_Se51:2
C_Se51:1
gnd-00A-18
0-Se51.2-18
0-Se51.Jmp-18
Closed when buckled
Has to be jumped w/o the option
OPTION

Cluster

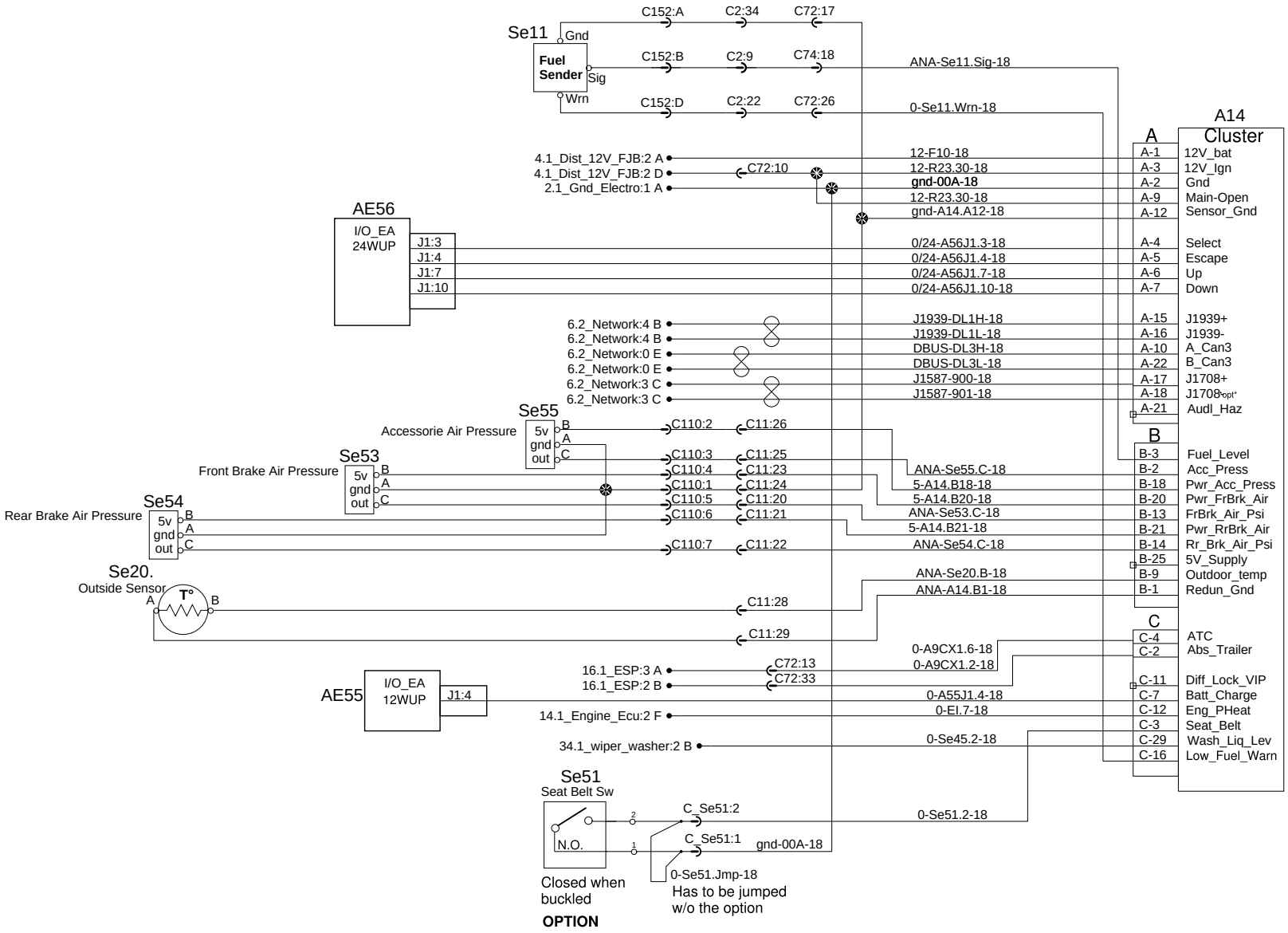
Se11
Gnd
Fuel Sender
Sig
Wrn
C152:A
C2:34
C72:17
C152:B
C2:9
C74:18
C152:D
C2:22
C72:26
ANA-Se11.Sig-18
0-Se11.Wrn-18
A14
Cluster
A
4.1_Dist_12V_FJB:2 A
4.1_Dist_12V_FJB:2 D
2.1_Gnd_Electro:1 A
C72:10
12-F10-18
12-R23.30-18
gnd-00A-18
12-R23.30-18
gnd-A14.A12-18
A-1 12V_bat
A-3 12V_Ign
A-2 Gnd
A-9 Main-Open
A-12 Sensor_Gnd
AE56
I/O_EA
24WUP
J1:3
J1:4
J1:7
J1:10
0/24-A56J1.3-18
0/24-A56J1.4-18
0/24-A56J1.7-18
0/24-A56J1.10-18
A-4 Select
A-5 Escape
A-6 Up
A-7 Down
6.2_Network:4 B
6.2_Network:4 B
6.2_Network:0 E
6.2_Network:0 E
6.2_Network:3 C
6.2_Network:3 C
J1939-DL1H-18
J1939-DL1L-18
DBUS-DL3H-18
DBUS-DL3L-18
J1587-900-18
J1587-901-18
A-15 J1939+
A-16 J1939-
A-10 A_Can3
A-22 B_Can3
A-17 J1708+
A-18 J1708-opt*
A-21 Audl_Haz
Se55
5v
gnd
out
Accessorie Air Pressure
C110:2
C11:26
Se53
Front Brake Air Pressure
C110:3
C110:4
C110:1
C110:5
C110:6
C11:25
C11:23
C11:24
C11:20
C11:21
ANA-Se55.C-18
5-A14.B18-18
5-A14.B20-18
ANA-Se53.C-18
5-A14.B21-18
B
B-3 Fuel_Level
B-2 Acc_Press
B-18 Pwr_Acc_Press
B-20 Pwr_FrBrk_Air
B-13 FrBrk_Air_Psi
B-21 Pwr_RrBrk_Air
Se54
Rear Brake Air Pressure
C110:7
C11:22
ANA-Se54.C-18
B-14 Rr_Brk_Air_Psi
B-25 5V_Supply
Se20.
Outside Sensor
T°
C11:28
C11:29
ANA-Se20.B-18
ANA-A14.B1-18
B-9 Outdoor_temp
B-1 Redun_Gnd
C
0-A9CX1.6-18
0-A9CX1.2-18
C-4 ATC
C-2 Abs_Trailer
AE55
I/O_EA
12WUP
J1:4
16.1_ESP:3 A
16.1_ESP:2 B
C72:13
C72:33
0-A55J1.4-18
0-EI.7-18
C-11 Diff_Lock_VIP
C-7 Batt_Charge
C-12 Eng_PHeat
14.1_Engine_Ecu:2 F
34.1_wiper_washer:2 B
0-Se45.2-18
C-3 Seat_Belt
C-29 Wash_Liq_Lev
C-16 Low_Fuel_Warn
Se51
Seat Belt Sw
N.O.
C_Se51:2
C_Se51:1
gnd-00A-18
0-Se51.2-18
0-Se51.Jmp-18
Closed when buckled
Has to be jumped w/o the option
OPTION

Cluster

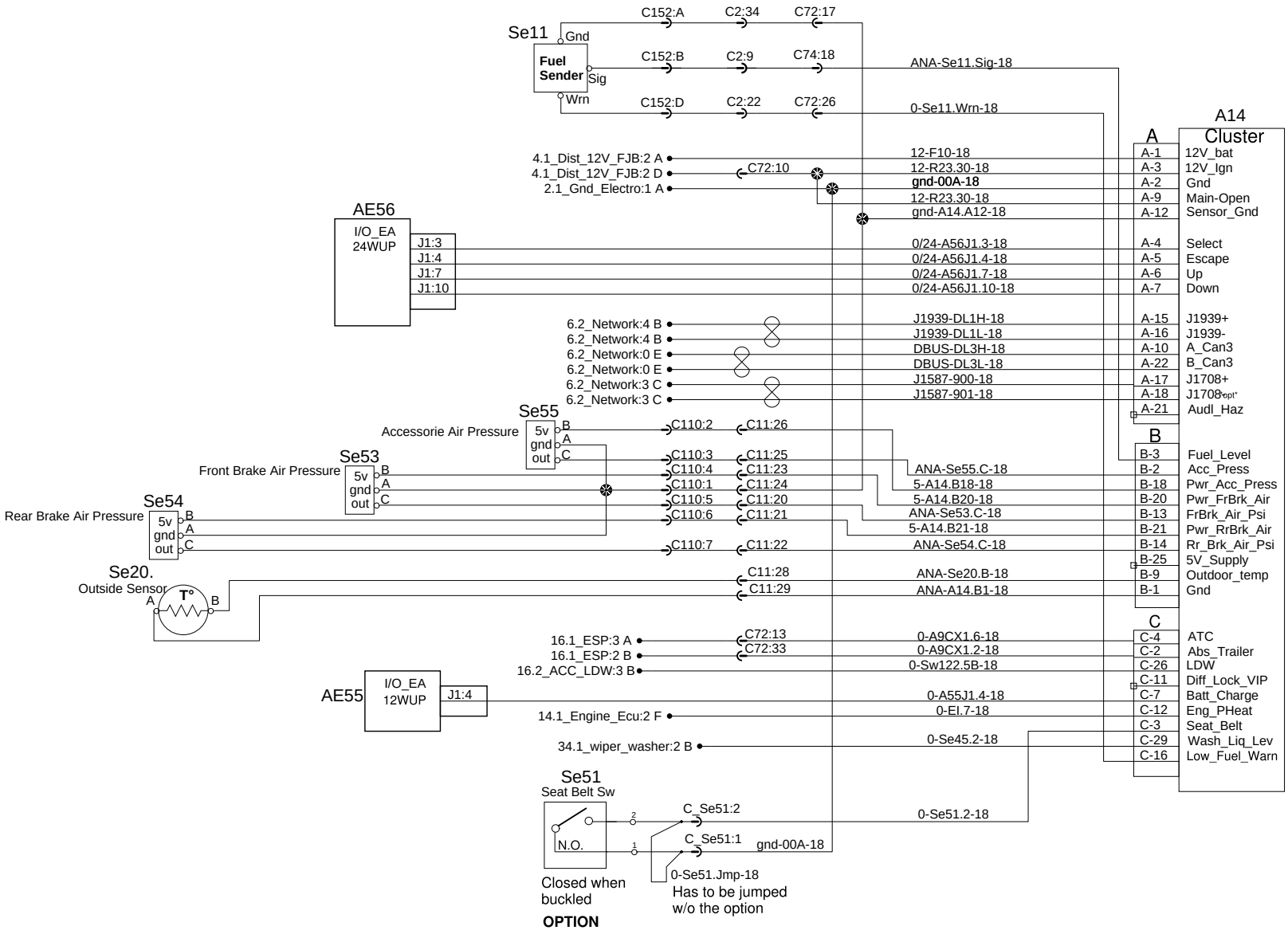
Se11
Gnd
Fuel Sender
Sig
Wrn
C152:A
C2:34
C72:17
C152:B
C2:9
C74:18
C152:D
C2:22
C72:26
ANA-Se11.Sig-18
0-Se11.Wrn-18
A14
Cluster
A
4.1_Dist_12V_FJB:2 A
4.1_Dist_12V_FJB:2 D
2.1_Gnd_Electro:1 A
C72:10
12-F10-18
12-R23.30-18
gnd-00A-18
12-R23.30-18
gnd-A14.A12-18
A-1 12V_bat
A-3 12V_Ign
A-2 Gnd
A-9 Main-Open
A-12 Sensor_Gnd
AE56
I/O_EA
24WUP
J1:3
J1:4
J1:7
J1:10
0/24-A56J1.3-18
0/24-A56J1.4-18
0/24-A56J1.7-18
0/24-A56J1.10-18
A-4 Select
A-5 Escape
A-6 Up
A-7 Down
6.2_Network:4 B
6.2_Network:4 B
6.2_Network:0 E
6.2_Network:0 E
6.2_Network:3 C
6.2_Network:3 C
J1939-DL1H-18
J1939-DL1L-18
DBUS-DL3H-18
DBUS-DL3L-18
J1587-900-18
J1587-901-18
A-15 J1939+
A-16 J1939-
A-10 A_Can3
A-22 B_Can3
A-17 J1708+
A-18 J1708opt*
A-21 Audl_Haz
Se55
5v
gnd
out
Accessorie Air Pressure
C110:2
C11:26
Se53
Front Brake Air Pressure
C110:3
C110:4
C110:1
C110:5
C110:6
C11:25
C11:23
C11:24
C11:20
C11:21
ANA-Se55.C-18
5-A14.B18-18
5-A14.B20-18
ANA-Se53.C-18
5-A14.B21-18
B
B-3 Fuel_Level
B-2 Acc_Press
B-18 Pwr_Acc_Press
B-20 Pwr_FrBrk_Air
B-13 FrBrk_Air_Psi
B-21 Pwr_RrBrk_Air
Se54
Rear Brake Air Pressure
C110:7
C11:22
ANA-Se54.C-18
B-14 Rr_Brk_Air_Psi
B-25 5V_Supply
Se20.
Outside Sensor
T°
C11:28
C11:29
ANA-Se20.B-18
ANA-A14.B1-18
B-9 Outdoor_temp
B-1 Gnd
C
16.1_ESP:3 A
16.1_ESP:2 B
16.2_ACC_LDW:3 B
C72:13
C72:33
0-A9CX1.6-18
0-A9CX1.2-18
0-Sw122.5B-18
C-4 ATC
C-2 Abs_Trailer
C-26 LDW
C-11 Diff_Lock_VIP
AE55
I/O_EA
12WUP
J1:4
0-A55J1.4-18
14.1_Engine_Ecu:2 F
0-EI.7-18
C-7 Batt_Charge
C-12 Eng_PHeat
34.1_wiper_washer:2 B
0-Se45.2-18
C-3 Seat_Belt
C-29 Wash_Liq_Lev
Se51
Seat Belt Sw
N.O.
C_Se51:2
C_Se51:1
gnd-00A-18
0-Se51.Jmp-18
0-Se51.2-18
C-16 Low_Fuel_Warn
Closed when buckled
Has to be jumped w/o the option
OPTION

Brake, Engine brake and Retarder

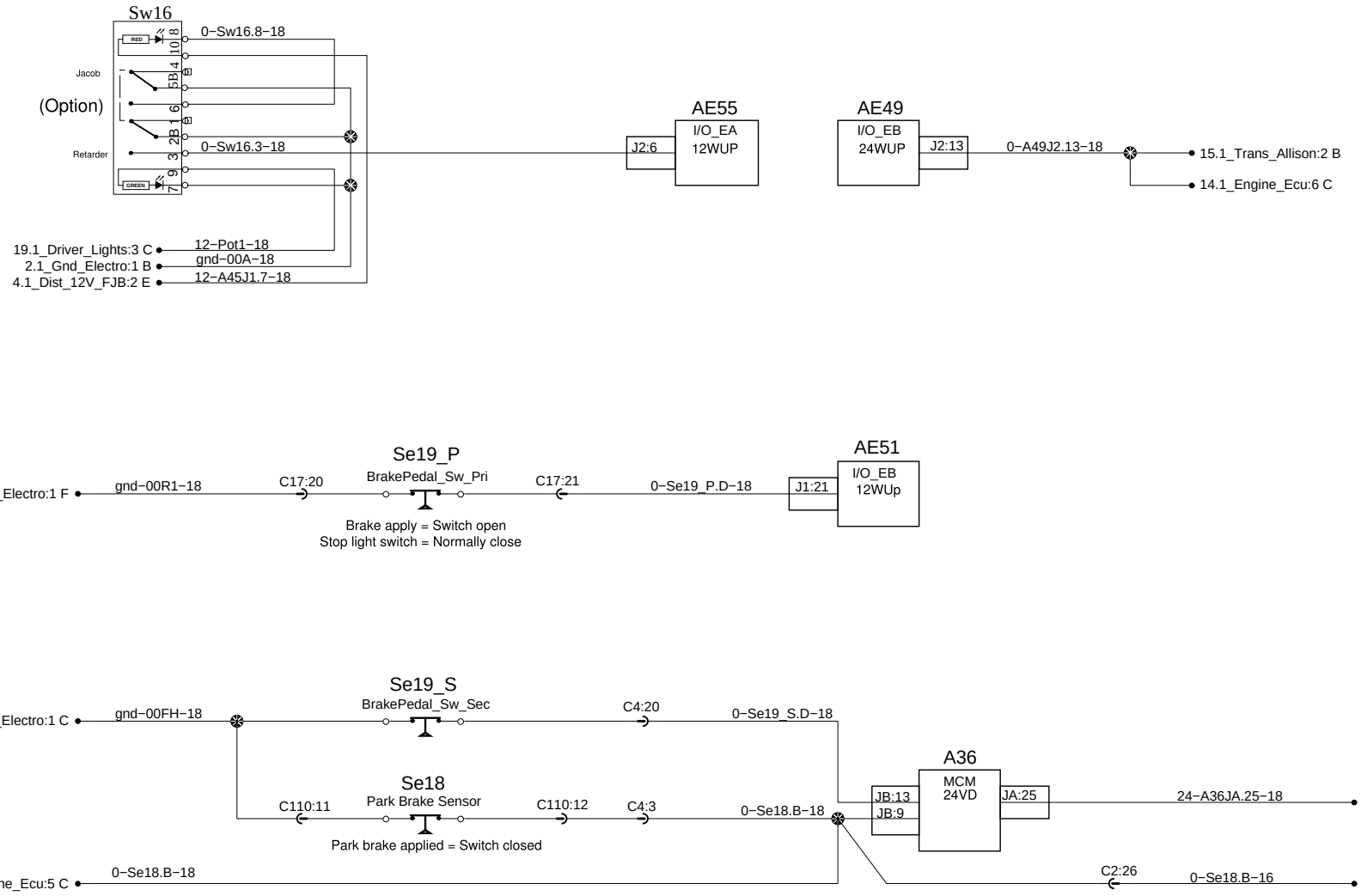

Brake, Engine brake and Retarder

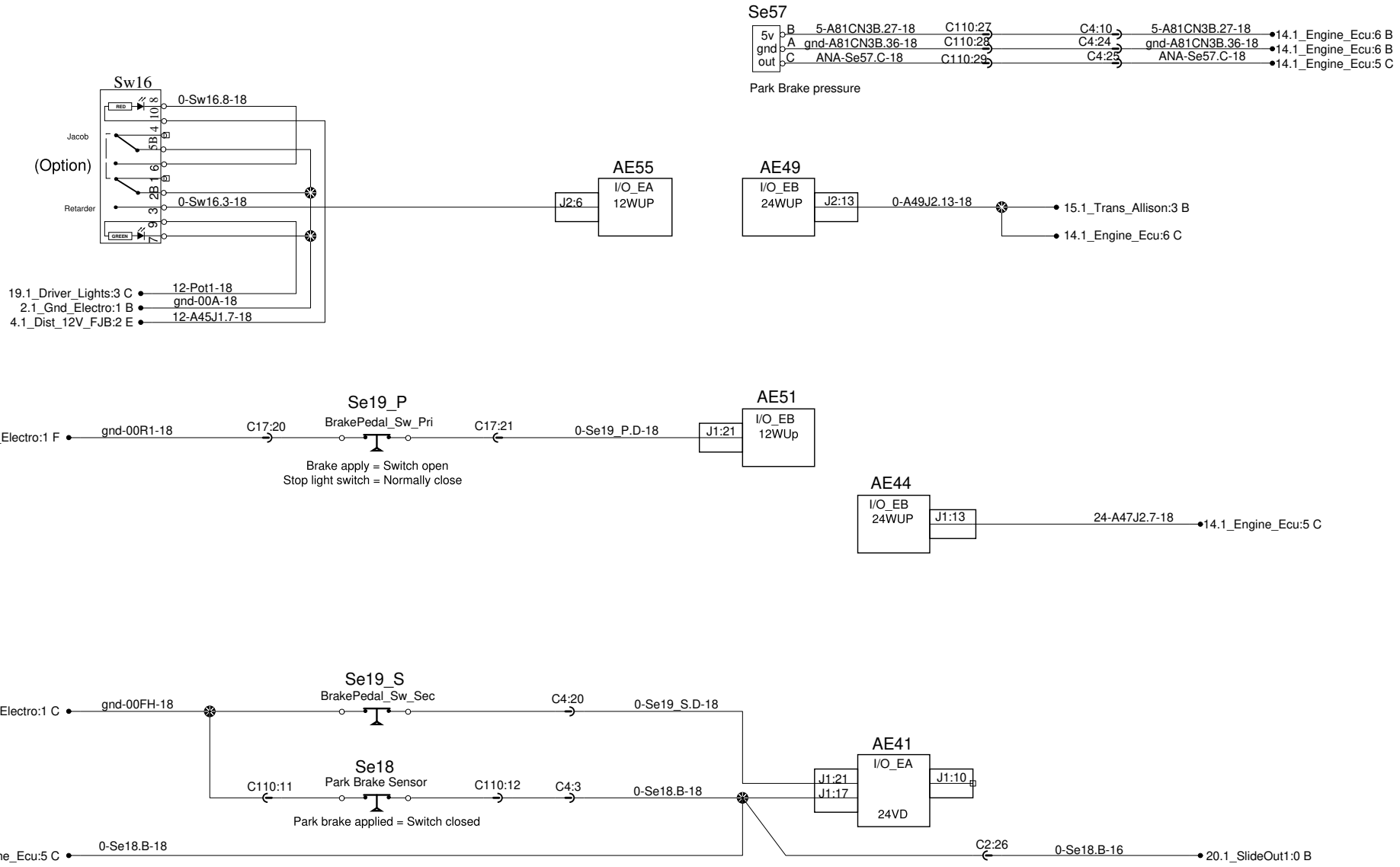

Trailer park brake

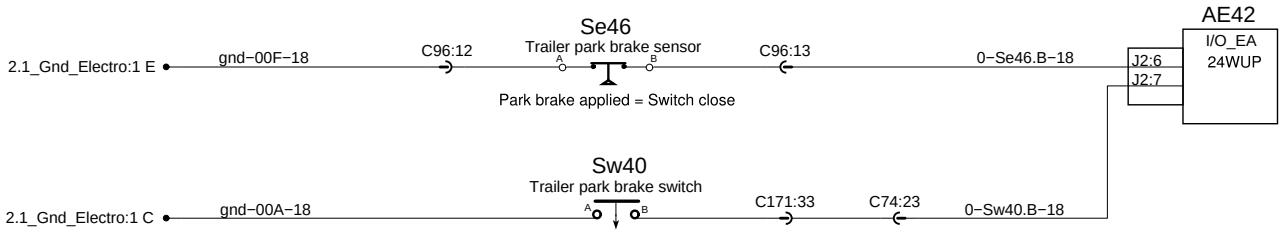

Fans drive electric

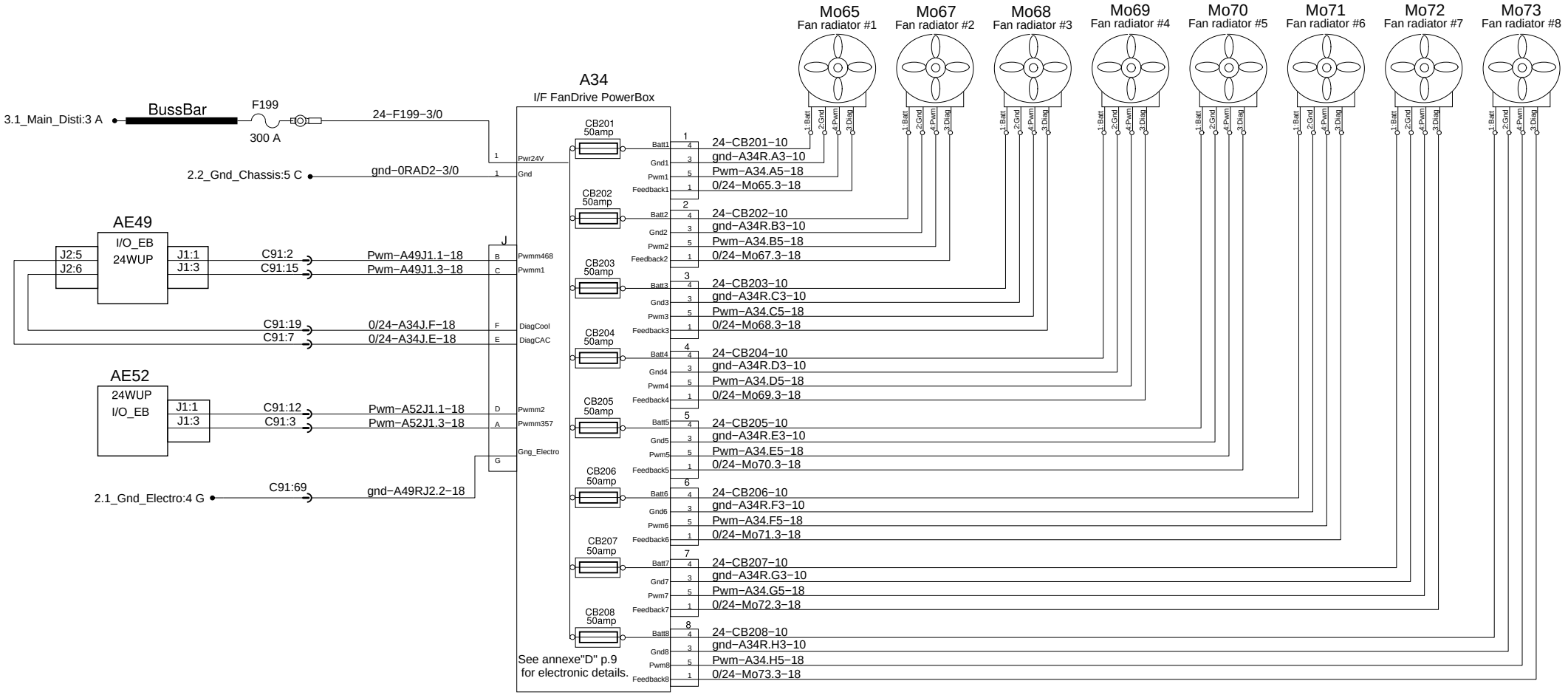

Engine ECU Volvo

Rev:5

Page:14.1

No:D061670

WIRING DIAGRAM

PREVOST

C397:7 C17:22 C2A:15 C72:4 0−EI.7−18 10.1_Cluster:4 C

R29 Preheater 563348

C50:6 C50:7 24−F126−18 5.1_Dist_RJB:2 C

3.1_Main_Disti:3 A BussBar F209 150 A BussBar Term127 Term126 24−R29−2 ENGINE PRE HEATER

2.2_Gnd_Chassis:7 E gnd−0ECU−2 Term131

0−EI.7−18

Sw17 Stop engine override

0−Sw17.6−18 C74:25 38.1_Fire_Supp:0 C

19.1_Driver_Lights:3 D 12−Pot1−18

2.1_Gnd_Electro:1 B gnd−00A−18

15.1_Trans_Allison:4 A

Se14 Throttle Position Sensor Idle Validation Switch

C2:4 C2:8 C2:3 C2:21 C2:20

4.1_Dist_12V_FJB:2 E 12−A45J1.7−18

Sw35 Cruise ON/OFF Switch

0−Sw35.8−18

C72:11

12−A81JB.19−18 C171:37

12−Sw35.3−18

AE43 I/O_EB 12VD J2:7 J2:10

19.1_Driver_Lights:3 C 12−Pot1−18

2.1_Gnd_Electro:1 C gnd−00A−18

A81 VECU_VOLVO_D13F

0/12−A1.25−18 JB 6 Sensor_Output_Shaft_Speed

JB 25 Out_Supply

5−A81JB.10−18 JB 10 Throttle_5v_Supply

Out_Supply4 JB 5

ANA−Se14A.B−18 JB 8 Throttle_position

gnd−A81JB.22−18 JB 22 Throttle_Ground

JB 24 Eng_RetBrk

12−A81JB.19−18 JB 19 Output_Supply_12v

12−Se14B.C−18 JA 23 Idle_Validation_1

12−A43J2.7−18 JA 1 CC_Set_Decelerate

12−A43J2.10−18 JA 2 CC_Resume_Accelerate

C171:8 C72:2 12−Sw35.3−18 JA 3 CC_Enable

C72:27 12−Sw14.3−18 JA 29 Fast_Idle

12.1_Brake:4 B C17:23 C2A:20 0−A49J2.13−18 JA 28 Retarder_En

gnd−00F−18 JA 12 Main_Battery_Ground

2.1_Gnd_Electro:1 E

5.1_Dist_RJB:2 A C17:24 C2A:10 12−F100−18 JA 13 Battery_+12v_Controled

12−R23.30−18 JA 14 Ignition

4.1_Dist_12V_FJB:2 D

24−A41J1.16−18 JA 20 Engine_Brake_High

24−A41J1.19−18 JA 21 Engine_Brake_Low

12.1_Brake:3 D 0−Se18.B−18 JB 11 Park_Brake_Signal

IVS_Out Supply_Control_Relay JB 17 JB 15 0−A81JB.15−18 3.2_Ign_Start:4 C

AE41 I/O_EA 24VD J1:16 J1:19

6.2_Network:2 C J1587−901−18 JC 1 J1587_B_901

6.2_Network:2 C J1587−900−18 JC 2 J1587_A_900

6.2_Network:2 B J1939−DL1H−18 JC 4 J1939_CAN1_H

6.2_Network:2 B J1939−DL1L−18 JC 5 J1939_CAN1_L

12.1_Brake: 24−A36JA.25−18 JA 5 Brake_Redundant

3.2_Ign_Start:2 D 24−Sw58.7−18 JA 6 Crank_Signal

JA 17 ACC_Time_Gap_Inc

JB 7 ACC_Time_Gap_Dec

Air_Dryer_Regen_Sol Air_Dryer_Governor_Sol JB 16 JB 4 0−A81JB.16−18 37.1_VLink_ADryer:2 C 0−A81JB.4−18 37.1_VLink_ADryer:2 D

37.1_VLink_ADryer:2 D 5−A81JB.26−18 JB 26 Wet_Tank_Press_5v

37.1_VLink_ADryer:2 D Data−L350A.B2−18 JB 9 Wet_Tank_Press_Out

37.1_VLink_ADryer:2 D gnd−A81JB.23−18 JB 23 Wet_Tank_Press_Gnd

Sw14 Fast Idle

0−Sw14.8−18

gnd−00A−18

12−A81JB.19−18

12−Sw14.3−18

4.1_Dist_12V_FJB:2 E 12−A45J1.7−18

19.1_Driver_Lights:3 C 12−Pot1−18

EI Volvo D13 2010 REF. TO VOLVO ENGINE DIAGRAM OBD13

14.2_Urea:2 E J1939−DL7H−18 34 SubNetH Preheater_Relay 7

14.2_Urea:2 E J1939−DL7L−18 36 SubNetL

6.2_Network:1 C C397:48 J2284−DL2H−18 2 Can2H

6.2_Network:1 C C397:47 J2284−DL2L−18 5 Can2L

6.2_Network:1 B C397:21 J1939−DL1L−18 4 J1939L

6.2_Network:0 B C397:20 J1939−DL1H−18 1 J1939H

Data−A81JB.17−18 C2:32 C92C:1 8 IVS

C54:2 0−Se13.B−18 28 Colant_Level_Sensor

C54:1 gnd−EI.18−18 18 Sw_Ground

Se13 Coolant_Level_Sensor

23 AC_Clutch DPF_Press_Sig 24 DPF_Sens_5v 22 DPF_Sens_Gnd 26 DPF_Temp 29

5.1_Dist_RJB:2 B C397:26 12−F73−14 37 WIF_Heater

C397:33 gnd−00R5−14 39 Ground2

2.1_Gnd_Electro:1 G C397:38 gnd−00R5−14 31 Ground1

C397:42 gnd−00R5−14 27 Gnd_SRA_Cmpt

5.1_Dist_RJB:2 A C397:44 12−F91−14 25 Battery3_PreHeater_VGT

5.1_Dist_RJB:2 A C397:37 12−F99−14 13 Pwr_EMSA

5.1_Dist_RJB:2 A C397:41 12−F99−14 15 Pwr_EmsB

5.1_Dist_RJB:2 A C397:66 12−F91−14 21 Eng_Comp.

J1939PH 3 J1939PL 6

Engine_Heater_Outlet

BLOCK HEATER

L G N

Engine ECU Volvo

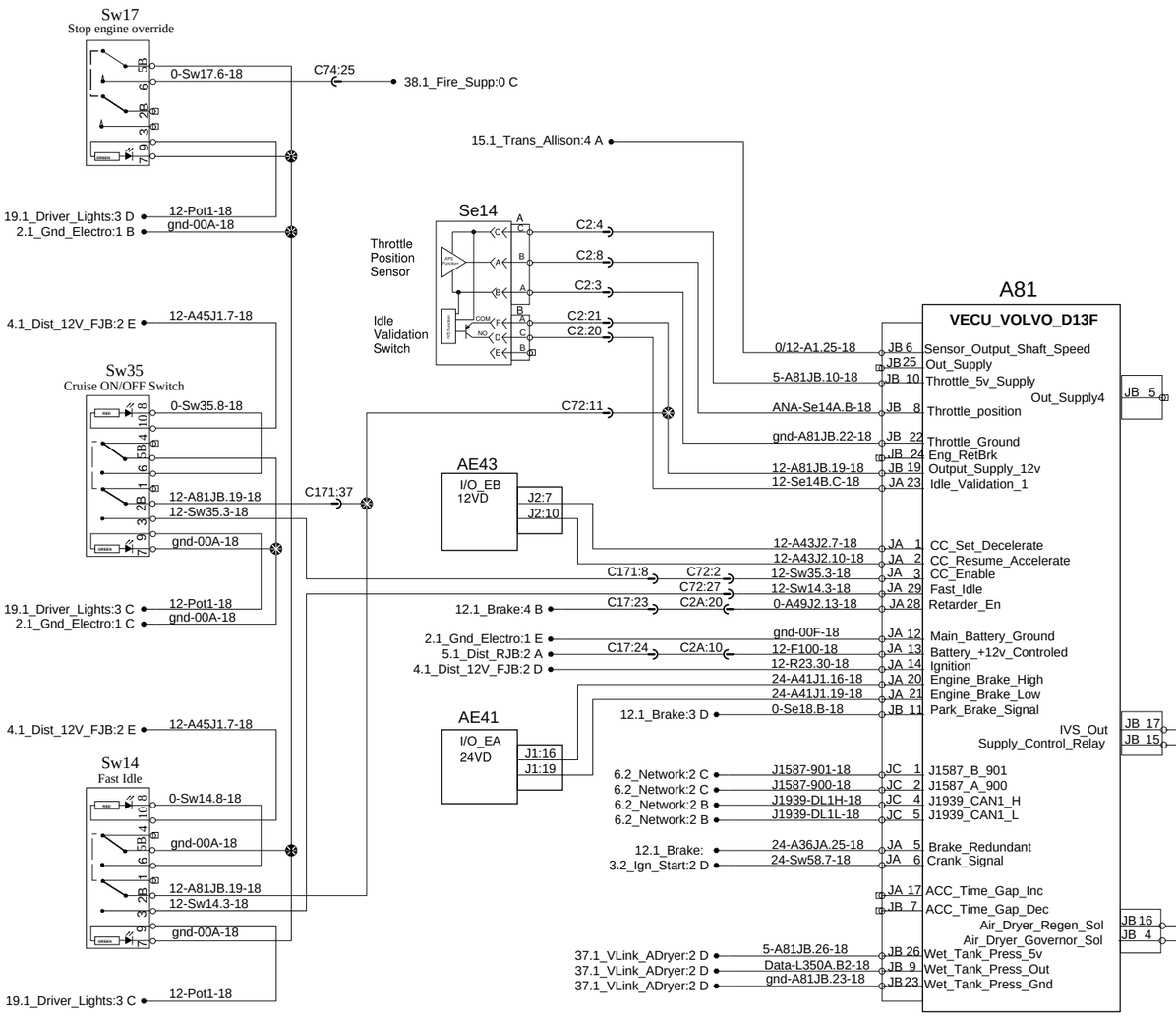

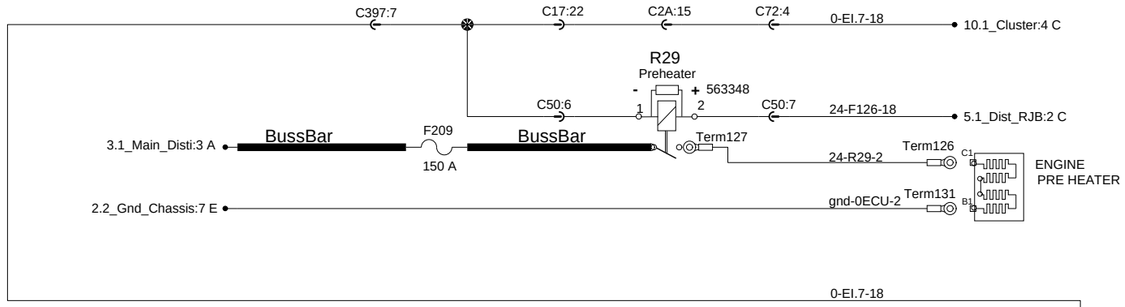

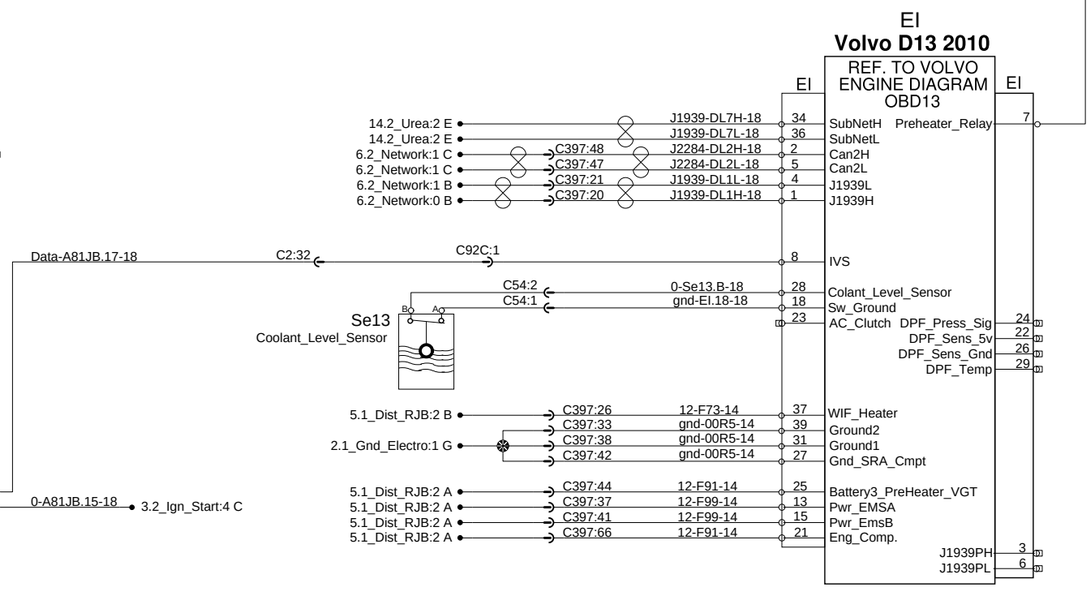

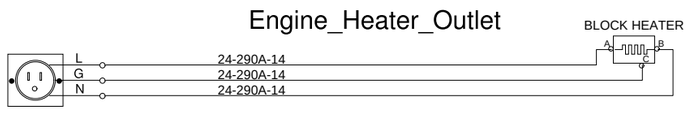

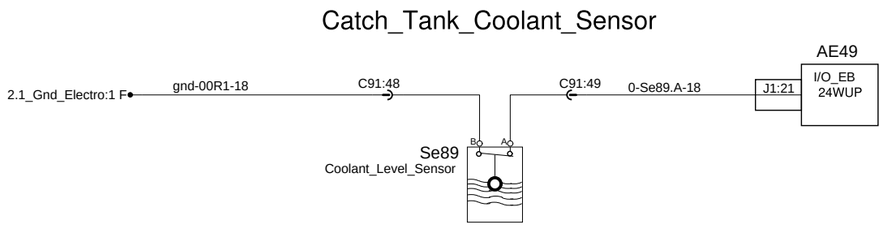

Rev:13

Page:14.1

No:D061670

WIRING DIAGRAM

PREVOST®

Engine ECU Volvo

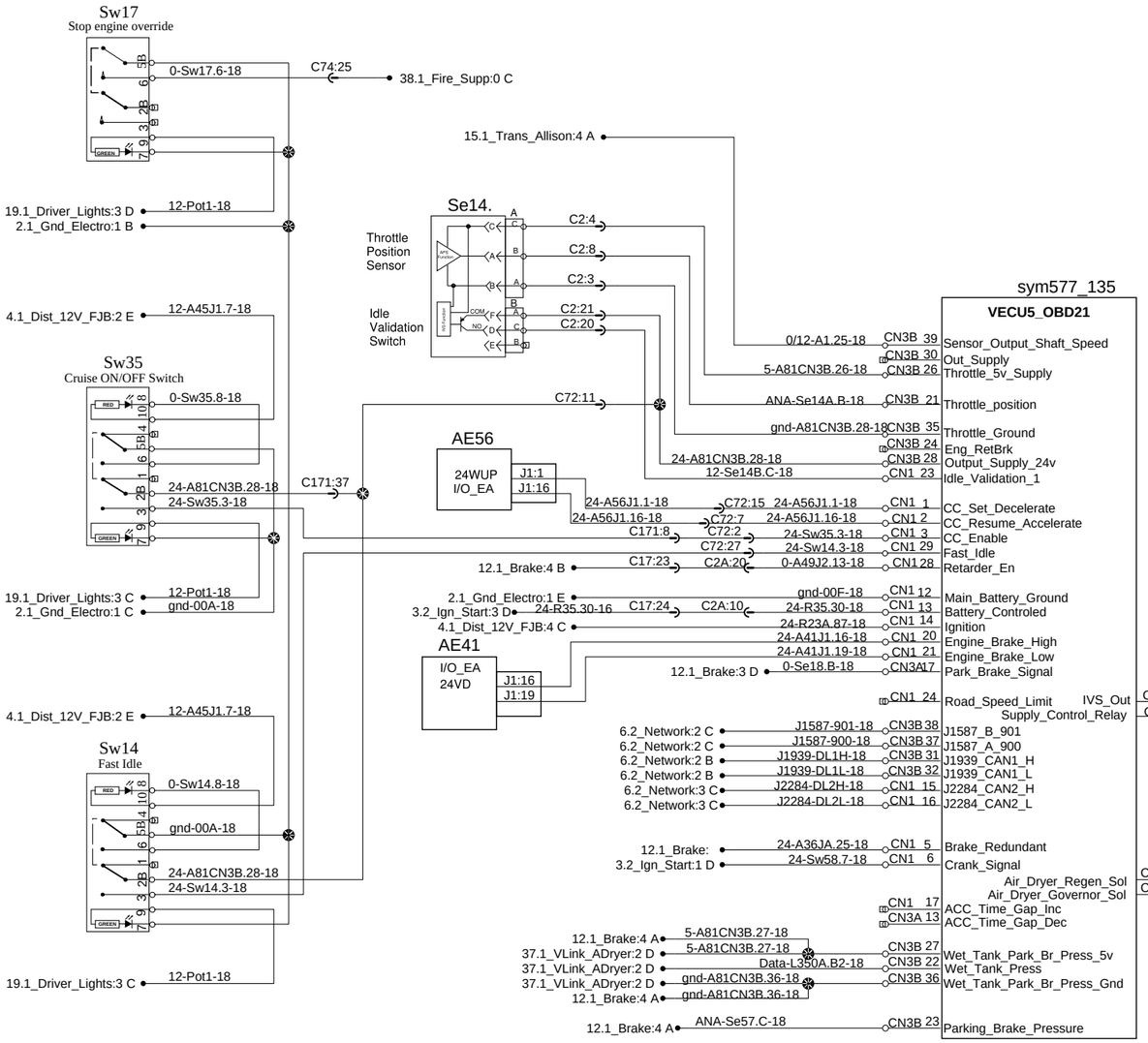

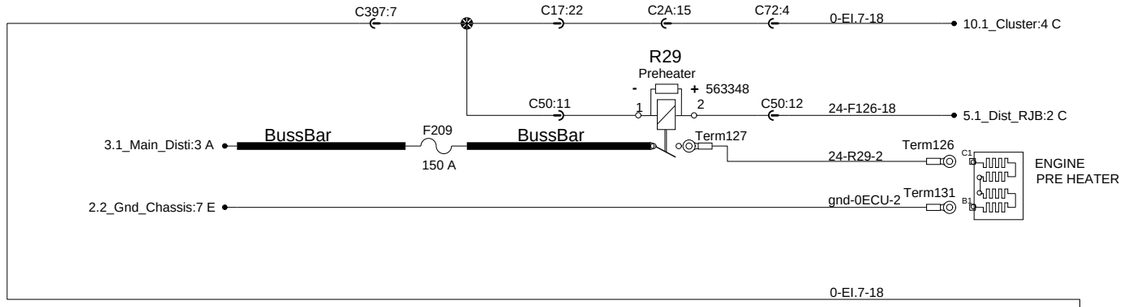

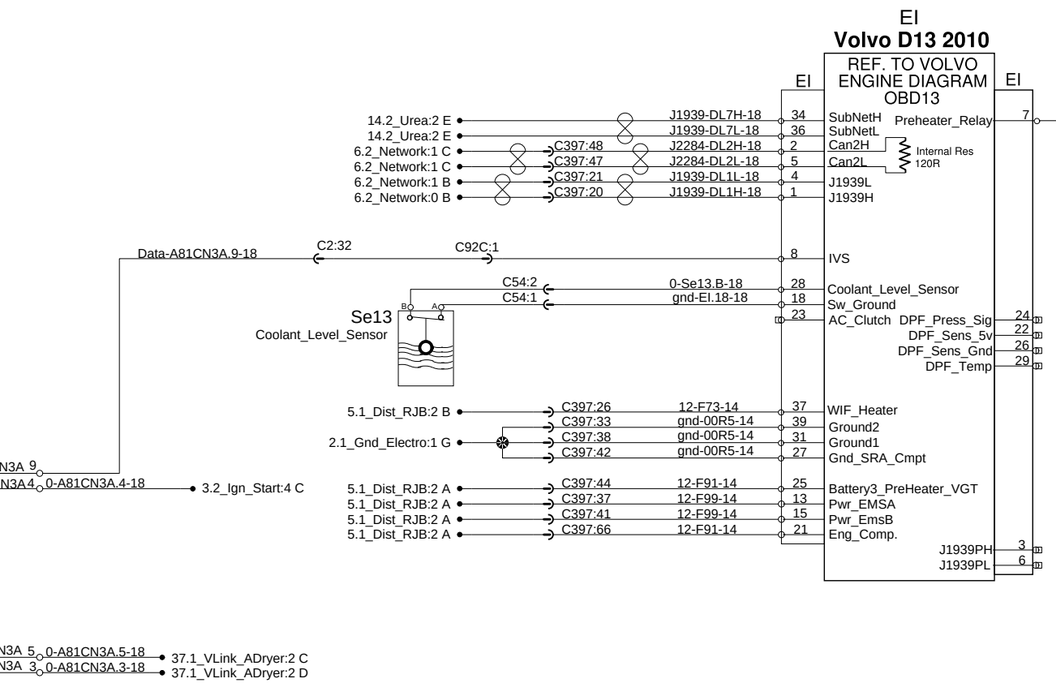

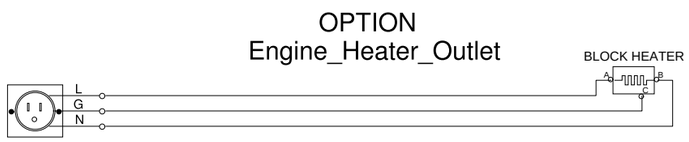

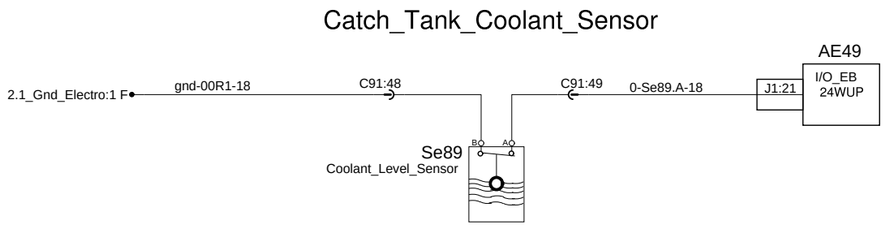

Rev:22

Page:14.1

No:D061670

WIRING DIAGRAM

PREVOST®

Engine ECU Volvo

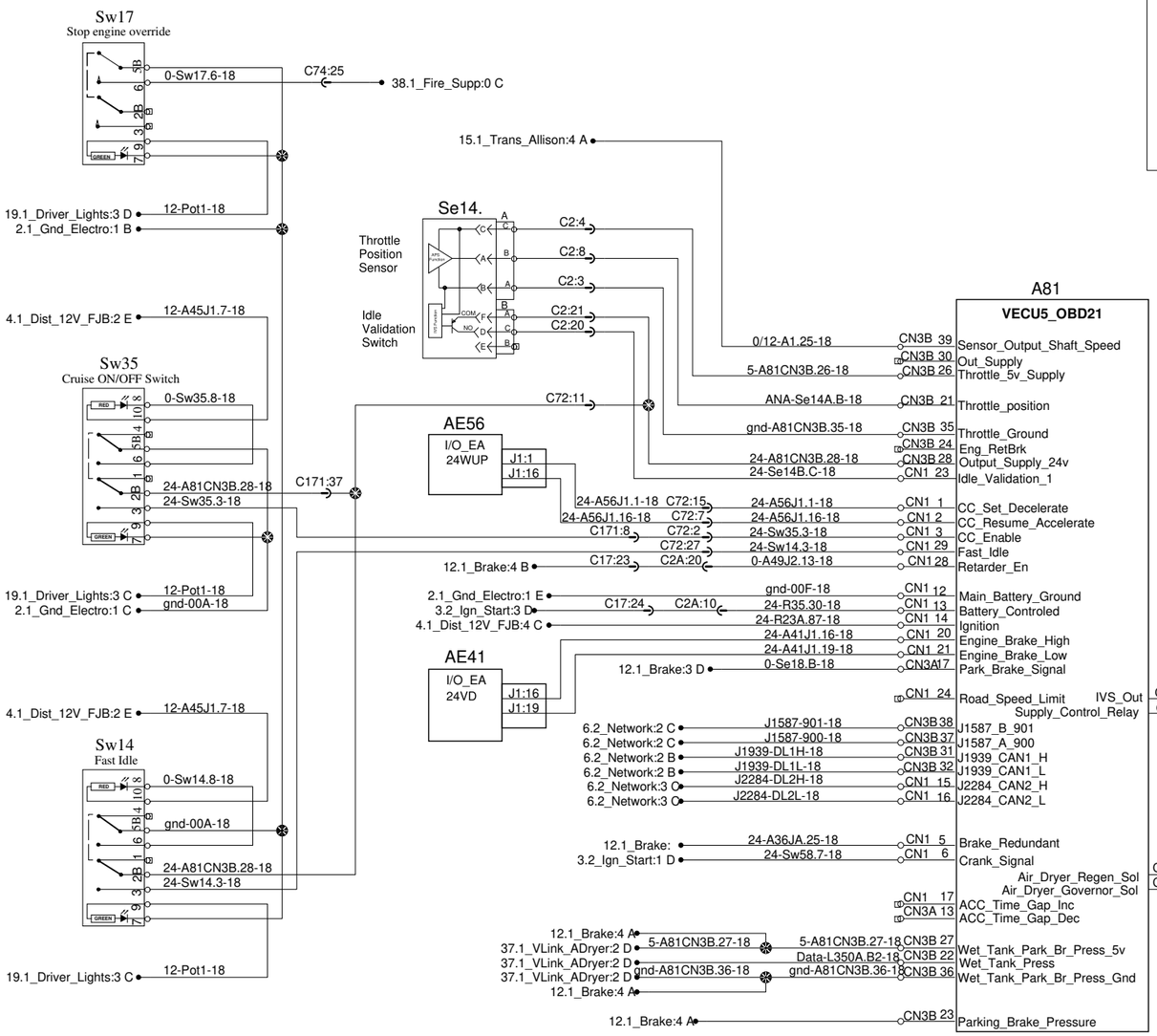

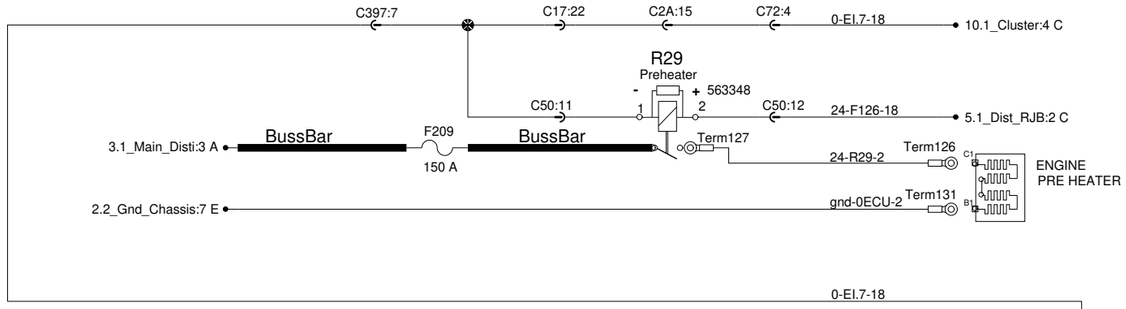

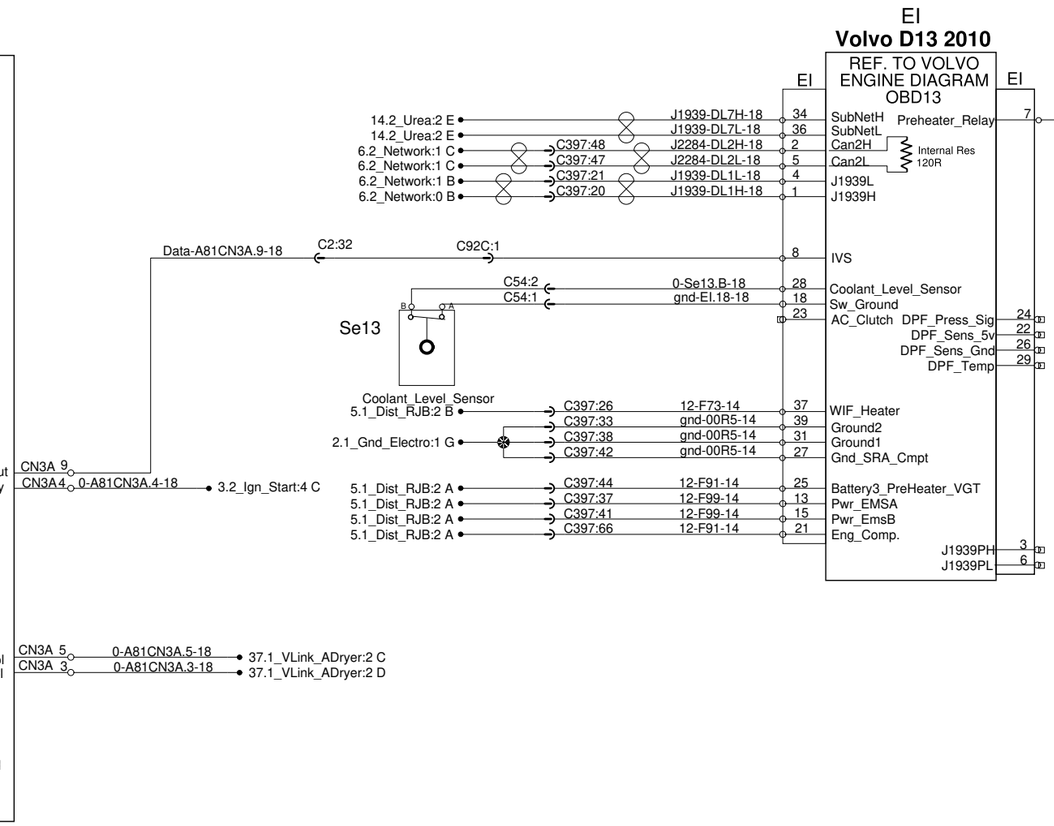

OPTION
Engine_Heater_Outlet

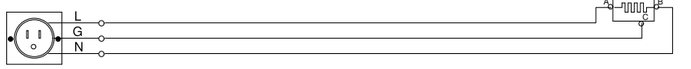

Catch_Tank_Coolant_Sensor

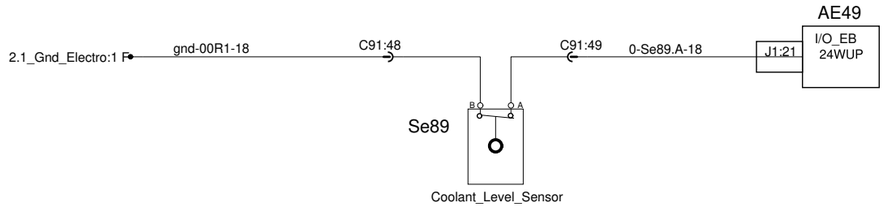

Rev:28

Page:14.1

No:D061670

WIRING DIAGRAM

PREVOST

Engine ECU Volvo

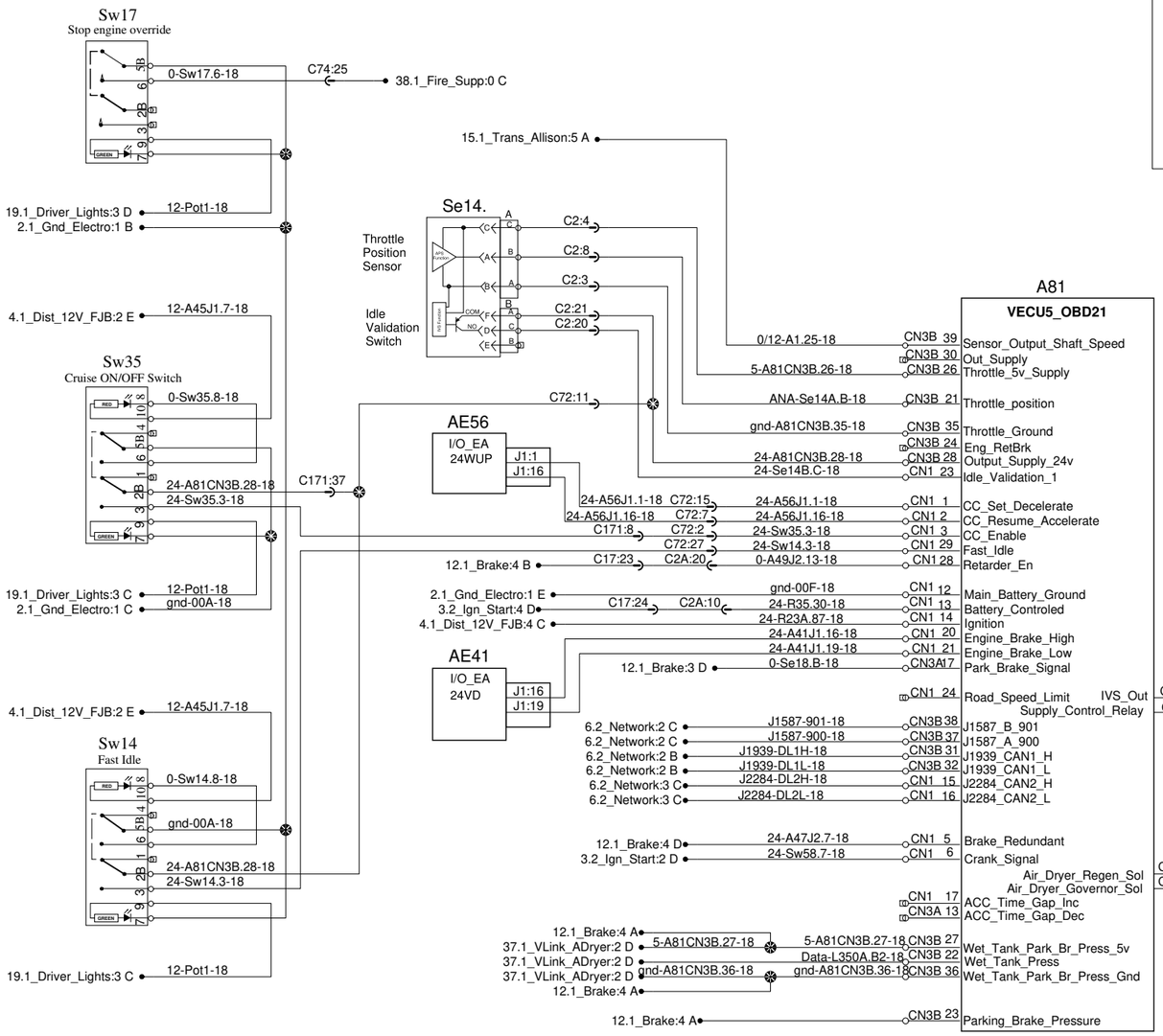

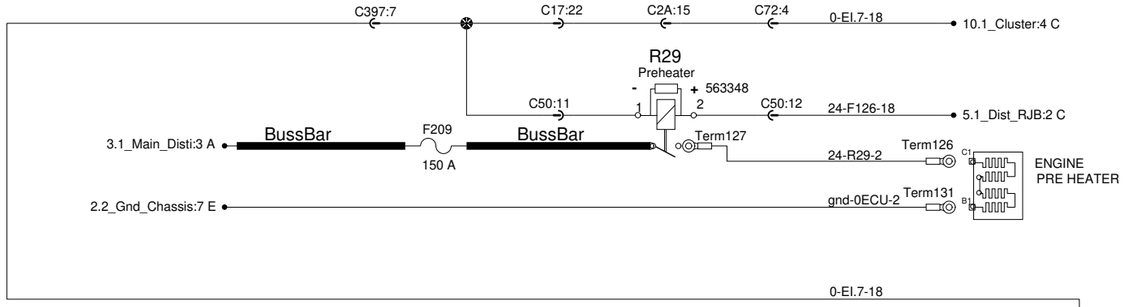

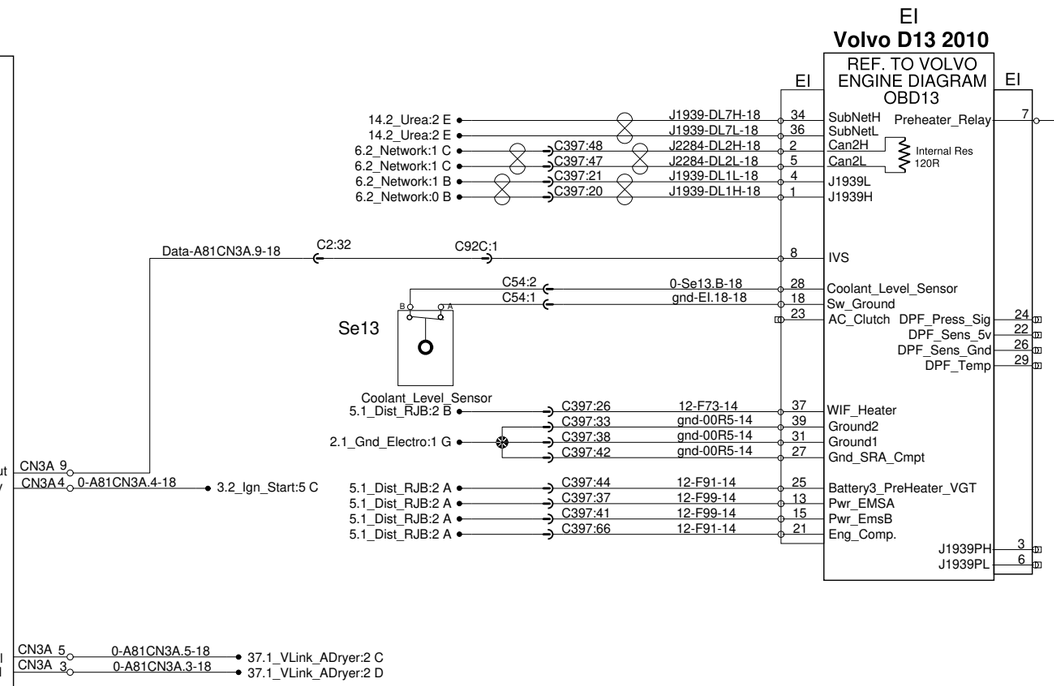

OPTION
Engine_Heater_Outlet

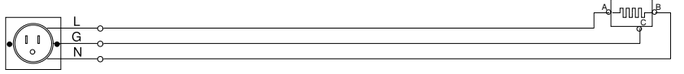

Catch_Tank_Coolant_Sensor

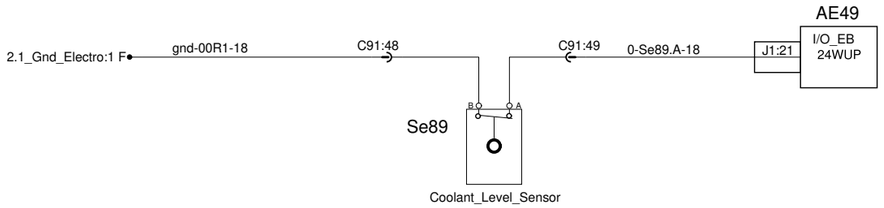

Rev:30

Page:14.1

No:D061670

WIRING DIAGRAM

PREVOST®

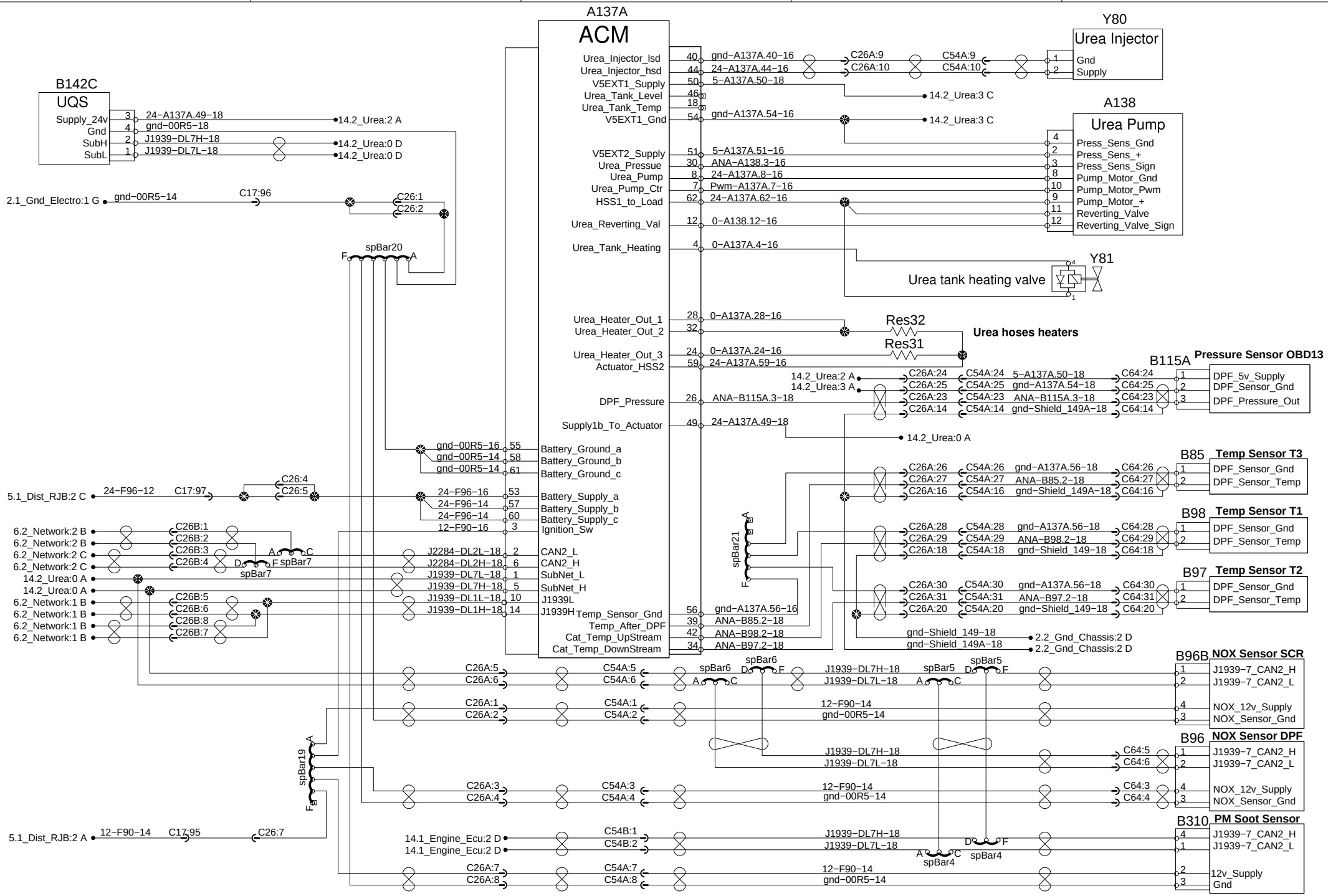

PREVOST®

WIRING DIAGRAM

No:D061670

Page:14.2

Rev:1

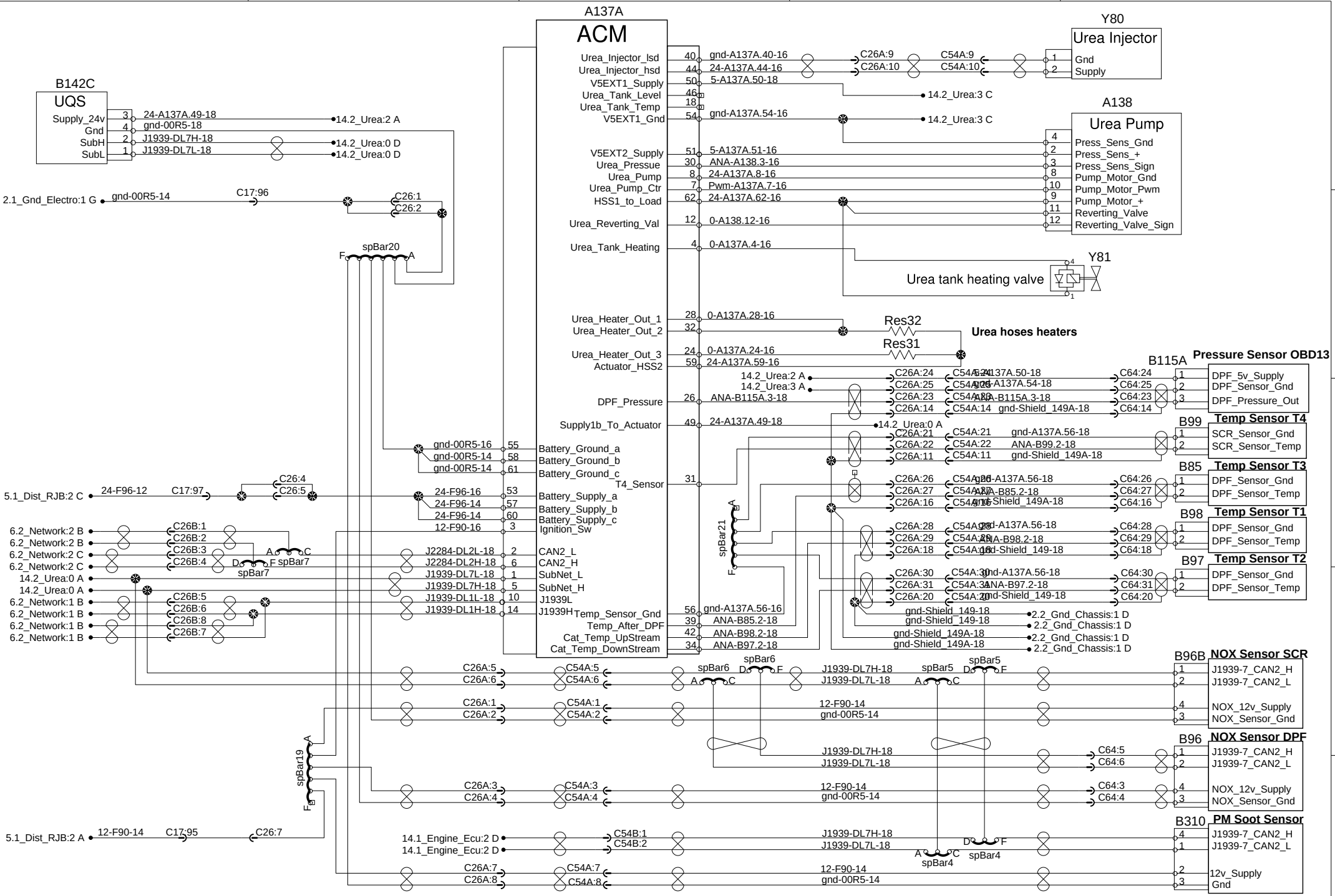

PREVOST®

WIRING DIAGRAM

No:D061670

Page:14.2

Rev:17

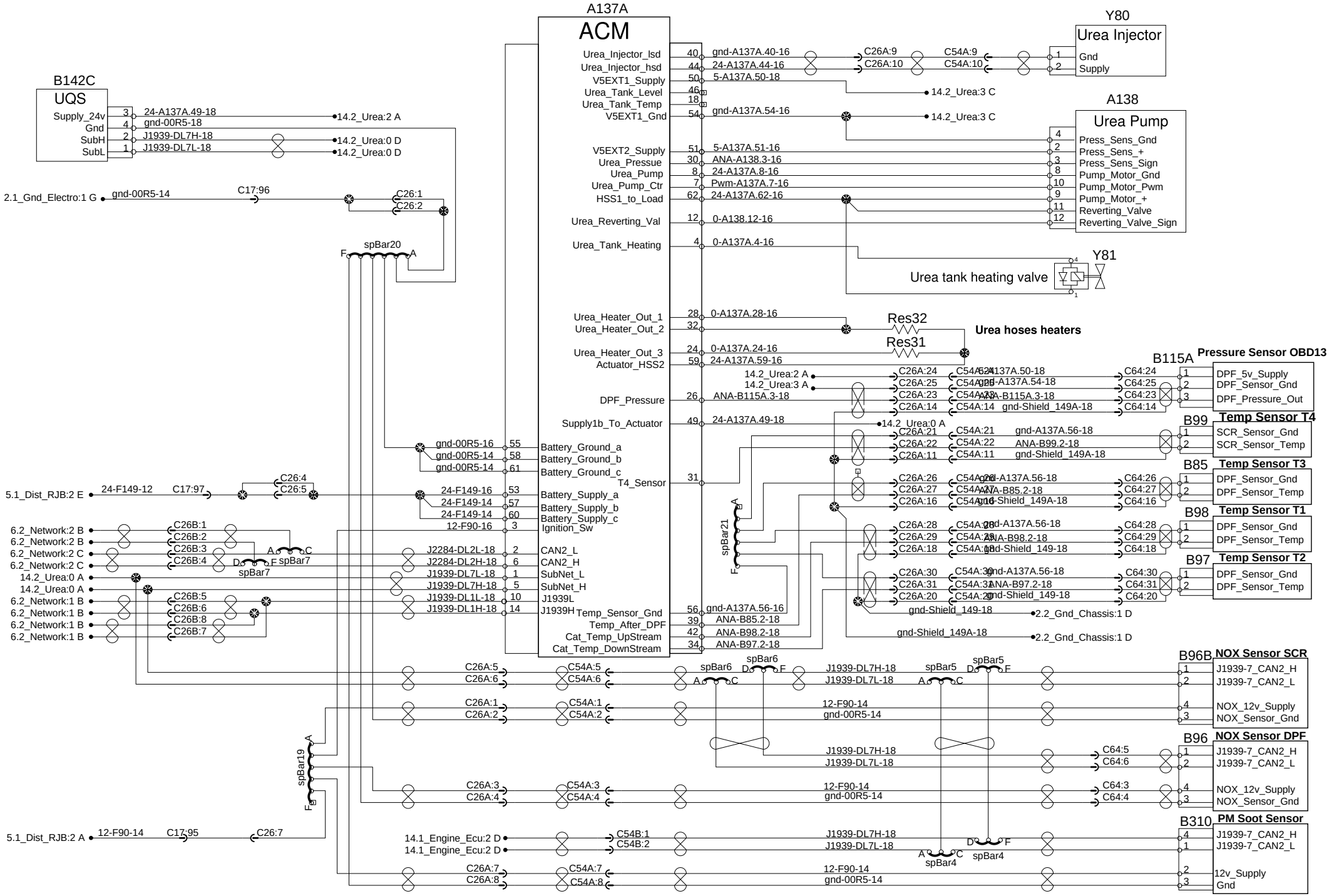

PREVOST®

WIRING DIAGRAM

No:D061670

Page:14.2

Rev:20

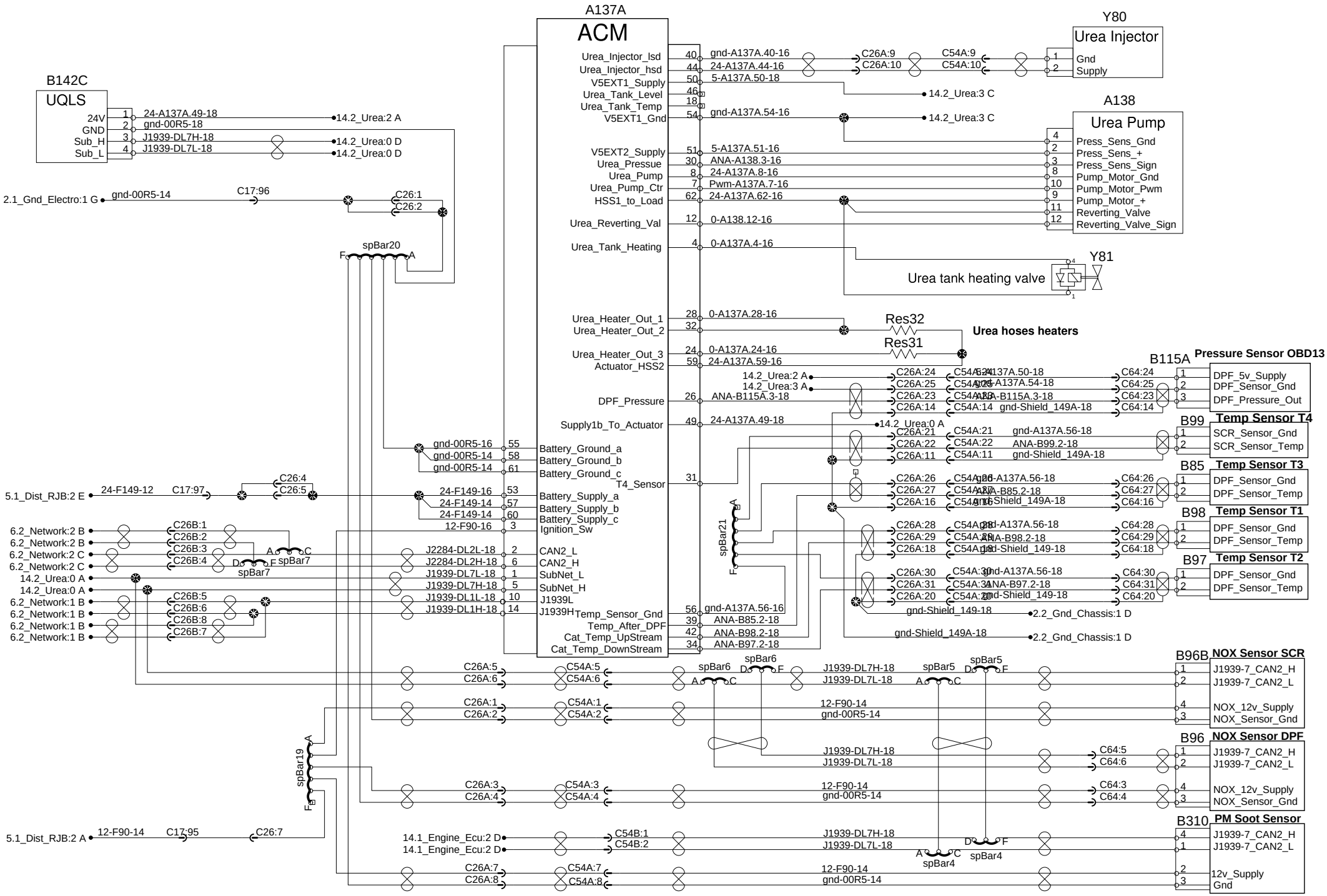

PREVOST®

WIRING DIAGRAM

No:D061670

Page:14.2

Rev:24

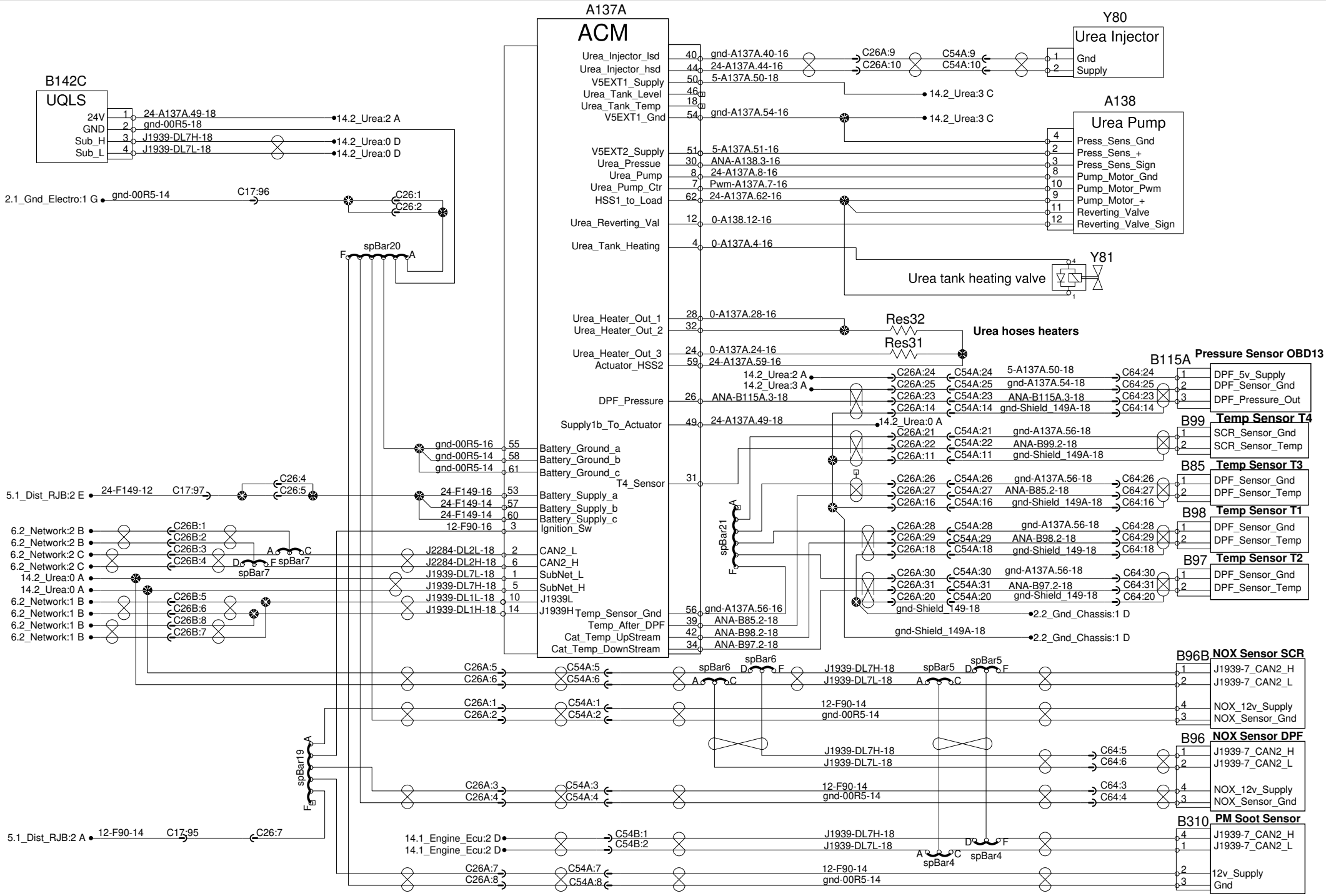
A137A
ACM
B142C
UQLS
24V
GND
Sub_H
Sub_L
Y80
Urea Injector
Gnd
Supply
A138
Urea Pump
Press_Sens_Gnd
Press_Sens_+
Press_Sens_Sign
Pump_Motor_Gnd
Pump_Motor_Pwm
Pump_Motor_+
Reverting_Valve
Reverting_Valve_Sign
Y81
Urea tank heating valve
Urea hoses heaters
Res32
Res31
B115A
Pressure Sensor OBD13
DPF_5v_Supply
DPF_Sensor_Gnd
DPF_Pressure_Out
B99
Temp Sensor T4
SCR_Sensor_Gnd
SCR_Sensor_Temp
B85
Temp Sensor T3
DPF_Sensor_Gnd
DPF_Sensor_Temp
B98
Temp Sensor T1
DPF_Sensor_Gnd
DPF_Sensor_Temp
B97
Temp Sensor T2
DPF_Sensor_Gnd
DPF_Sensor_Temp
B96B
NOX Sensor SCR
J1939-7_CAN2_H
J1939-7_CAN2_L
NOX_12v_Supply
NOX_Sensor_Gnd
B96
NOX Sensor DPF
J1939-7_CAN2_H
J1939-7_CAN2_L
NOX_12v_Supply
NOX_Sensor_Gnd
B310
PM Soot Sensor
J1939-7_CAN2_H
J1939-7_CAN2_L
12v_Supply
Gnd
Urea_Injector_lsd
Urea_Injector_hsd
V5EXT1_Supply
Urea_Tank_Level
Urea_Tank_Temp
V5EXT1_Gnd
V5EXT2_Supply
Urea_Pressue
Urea_Pump
Urea_Pump_Ctr
HSS1_to_Load
Urea_Reverting_Val
Urea_Tank_Heating
Urea_Heater_Out_1
Urea_Heater_Out_2
Urea_Heater_Out_3
Actuator_HSS2
DPF_Pressure
Supply1b_To_Actuator
T4_Sensor
Battery_Ground_a
Battery_Ground_b
Battery_Ground_c
Battery_Supply_a
Battery_Supply_b
Battery_Supply_c
Ignition_Sw
CAN2_L
CAN2_H
SubNet_L
SubNet_H
J1939L
J1939H
Temp_Sensor_Gnd
Temp_After_DPF
Cat_Temp_UpStream
Cat_Temp_DownStream
spBar20
spBar21
spBar7
spBar6
spBar5
spBar19
spBar4
2.1_Gnd_Electro:1 G
5.1_Dist_RJB:2 E
5.1_Dist_RJB:2 A
6.2_Network:2 B
6.2_Network:2 C
14.2_Urea:0 A
6.2_Network:1 B
14.1_Engine_Ecu:2 D
14.2_Urea:2 A
14.2_Urea:3 A
14.2_Urea:0 D
2.2_Gnd_Chassis:1 D
gnd-00R5-14
24-F149-12
12-F90-14
C17:96
C17:97
C17:95
C26:1
C26:2
C26:4
C26:5
C26:7
C26B:1
C26B:2
C26B:3
C26B:4
C26B:5
C26B:6
C26B:7
C26B:8
C54A:5
C54A:6
C54A:1
C54A:2
C54A:3
C54A:4
C54A:7
C54A:8
C54B:1
C54B:2
C64:5
C64:6
C64:3
C64:4
J1939-DL7H-18
J1939-DL7L-18
gnd-A137A.40-16
24-A137A.44-16
5-A137A.50-18
gnd-A137A.54-16
5-A137A.51-16
ANA-A138.3-16
24-A137A.8-16
Pwm-A137A.7-16
24-A137A.62-16
0-A138.12-16
0-A137A.4-16
0-A137A.28-16
0-A137A.24-16
24-A137A.59-16
ANA-B115A.3-18
24-A137A.49-18
gnd-A137A.56-16
ANA-B85.2-18
ANA-B98.2-18
ANA-B97.2-18
C26A:9
C26A:10
C54A:9
C54A:10
C26A:24
C26A:25
C26A:23
C26A:14
C54A:24
C54A:25
C54A:23
C54A:14
C64:24
C64:25
C64:23
C64:14
gnd-A137A.54-18
gnd-Shield_149A-18
C26A:21
C26A:22
C26A:11
C54A:21
C54A:22
C54A:11
ANA-B99.2-18
gnd-Shield_149A-18
C26A:26
C26A:27
C26A:16
C54A:26
C54A:27
C54A:16
ANA-B85.2-18
C64:26
C64:27
C64:16
C26A:28
C26A:29
C26A:18
C54A:28
C54A:29
C54A:18
ANA-B98.2-18
gnd-Shield_149-18
C64:28
C64:29
C64:18
C26A:30
C26A:31
C26A:20
C54A:30
C54A:31
C54A:20
ANA-B97.2-18
C64:30
C64:31
C64:20
gnd-Shield_149-18
gnd-Shield_149A-18
PREVOST®
WIRING DIAGRAM
No:D061670
Page:14.2
Rev:29

Transmission Alisson Gen 5

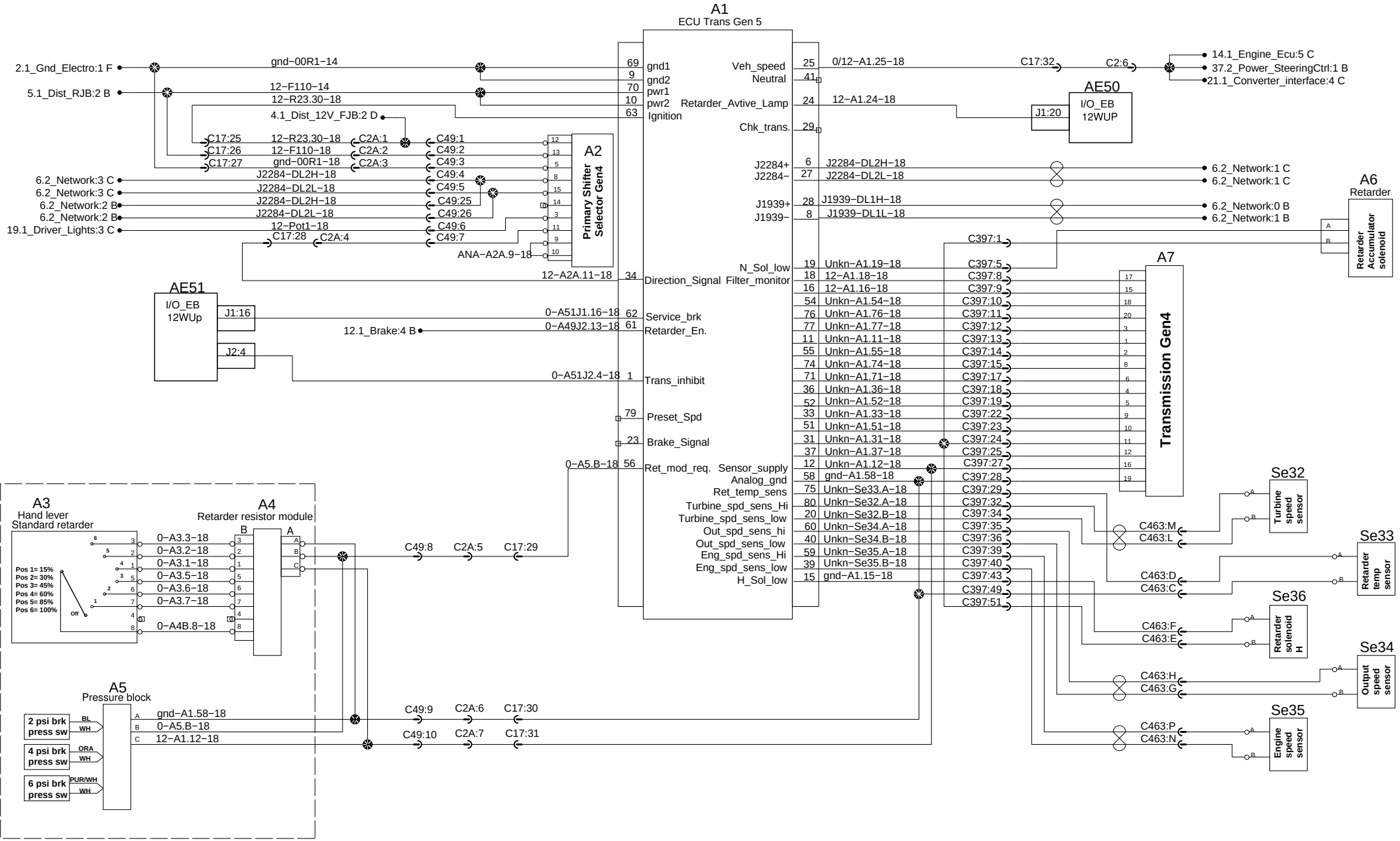

Transmission Alisson Gen 5

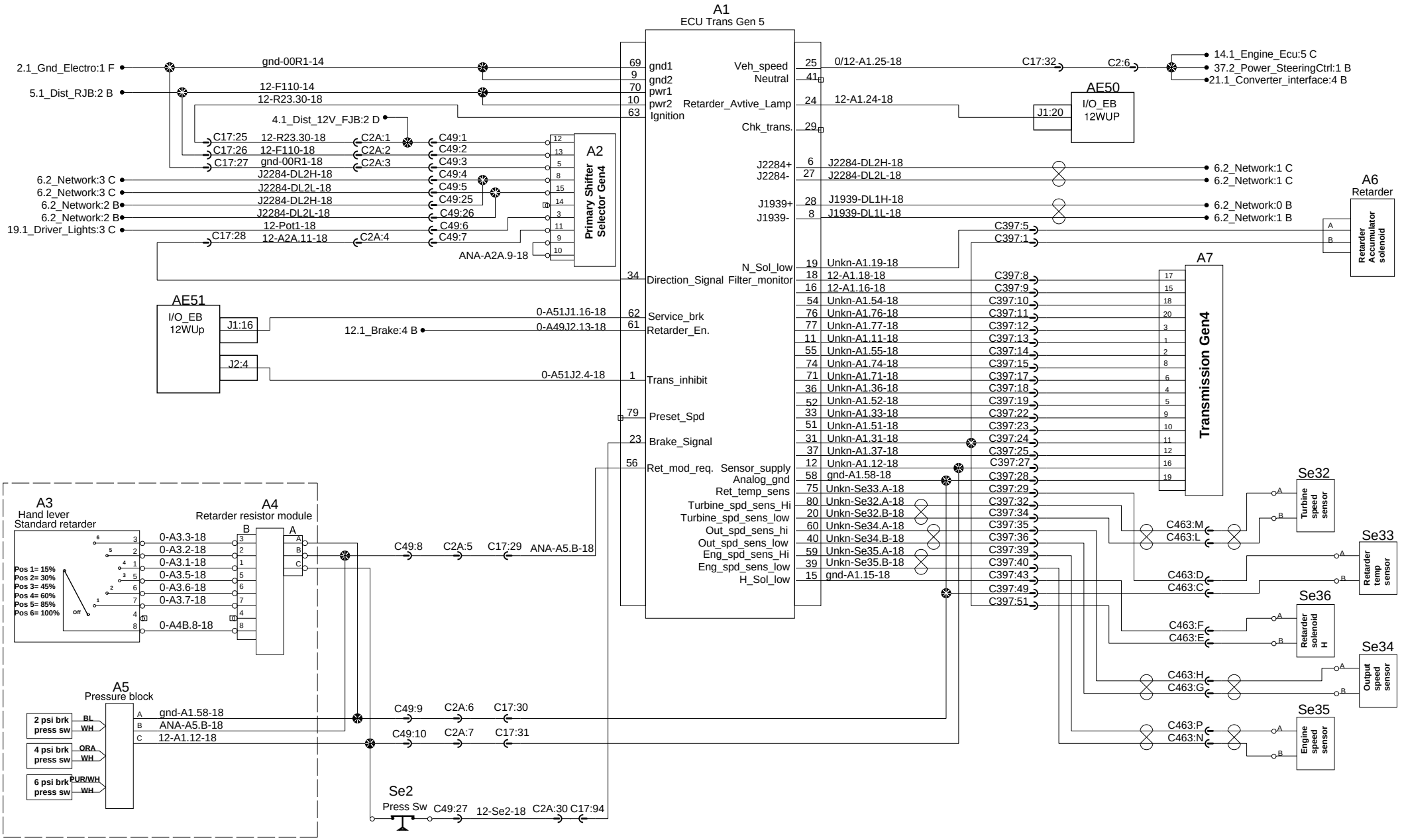

PREVOST®	WIRING DIAGRAM	No:D061670	Page:15.1	Rev:14

Transmission Alisson Gen 5

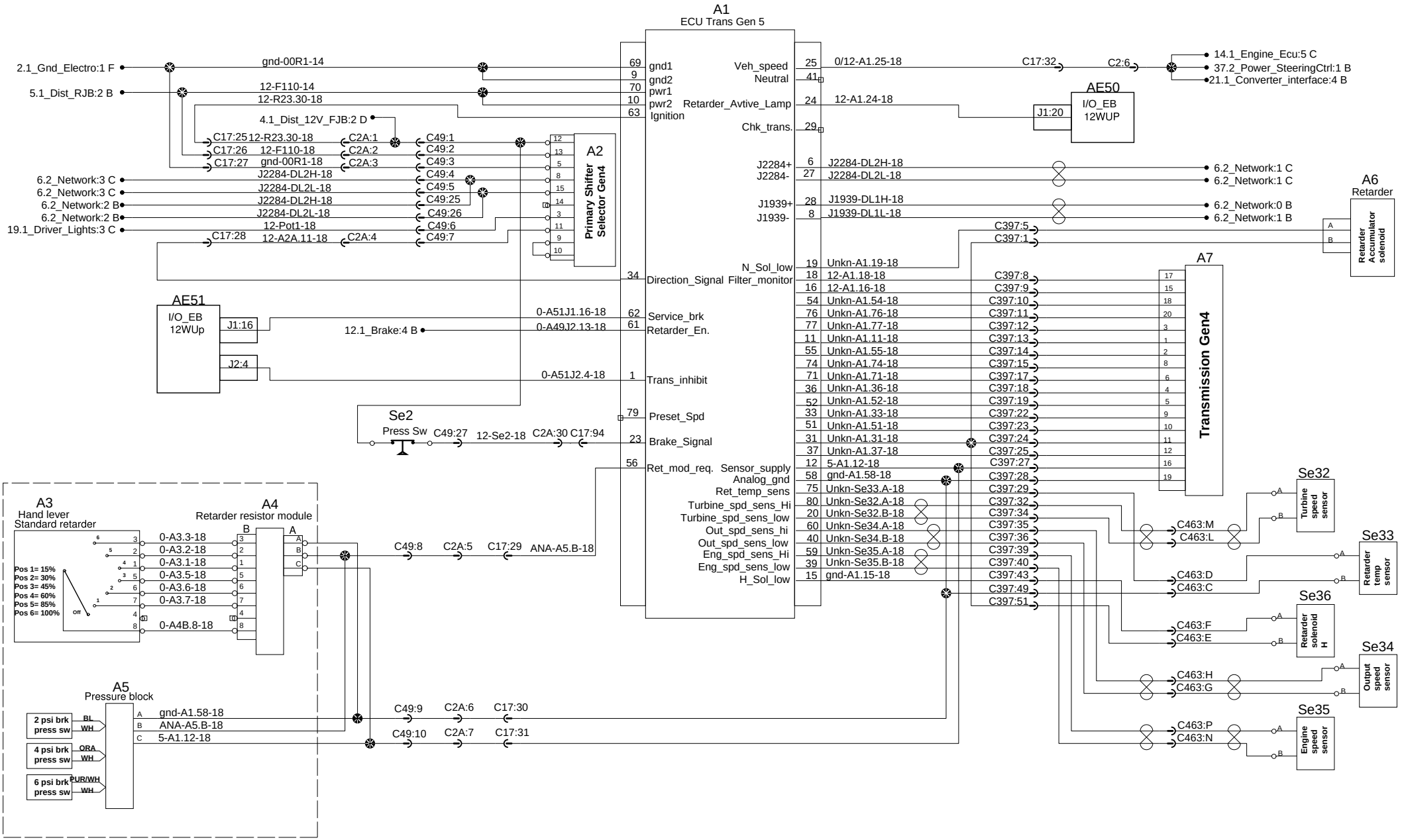

PREVOST®	WIRING DIAGRAM	No:D061670	Page:15.1	Rev:17

Transmission Alisson Gen 5

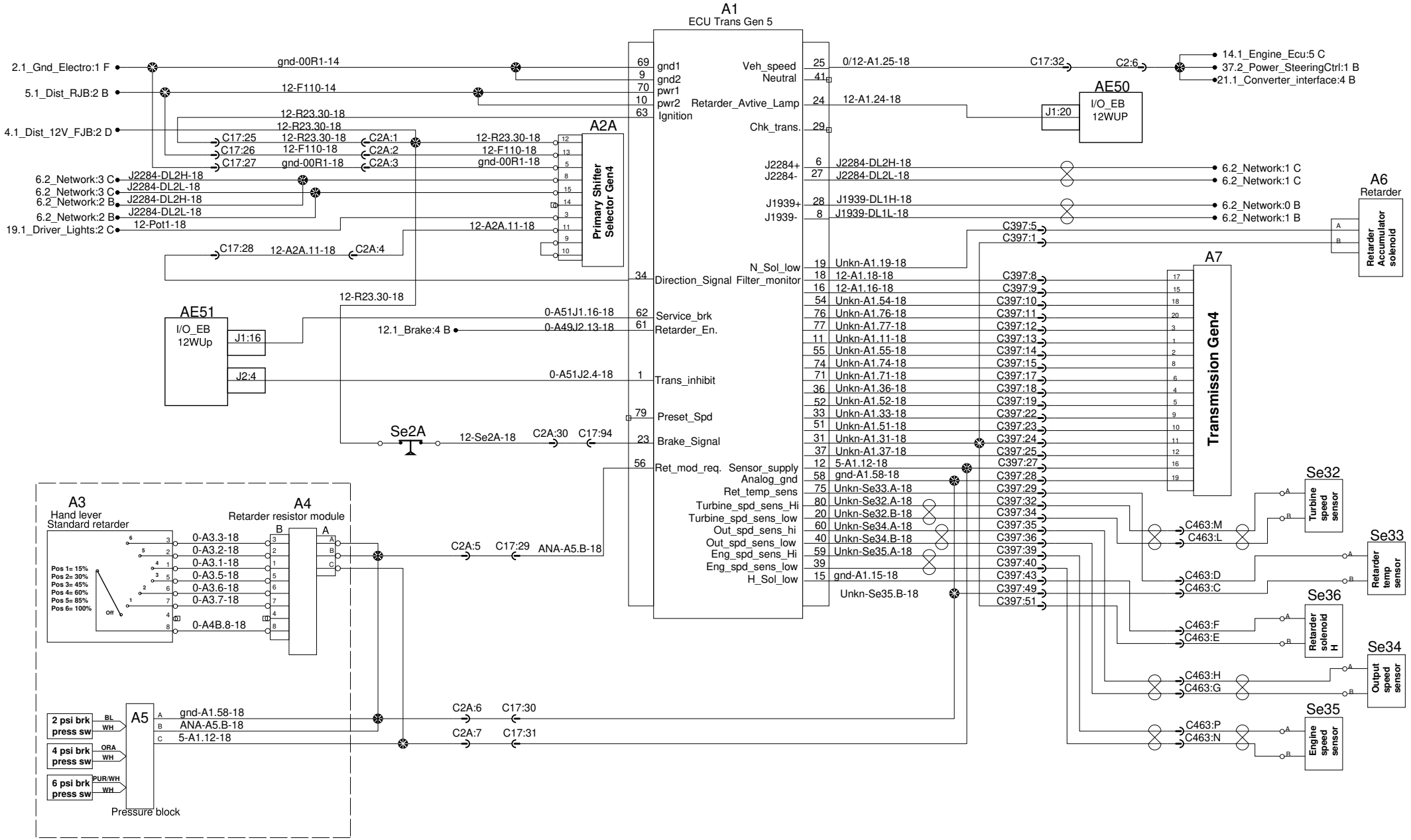

PREVOST®	WIRING DIAGRAM	No:D061670	Page:15.1	Rev:30

ESP

Electronic Stability Program

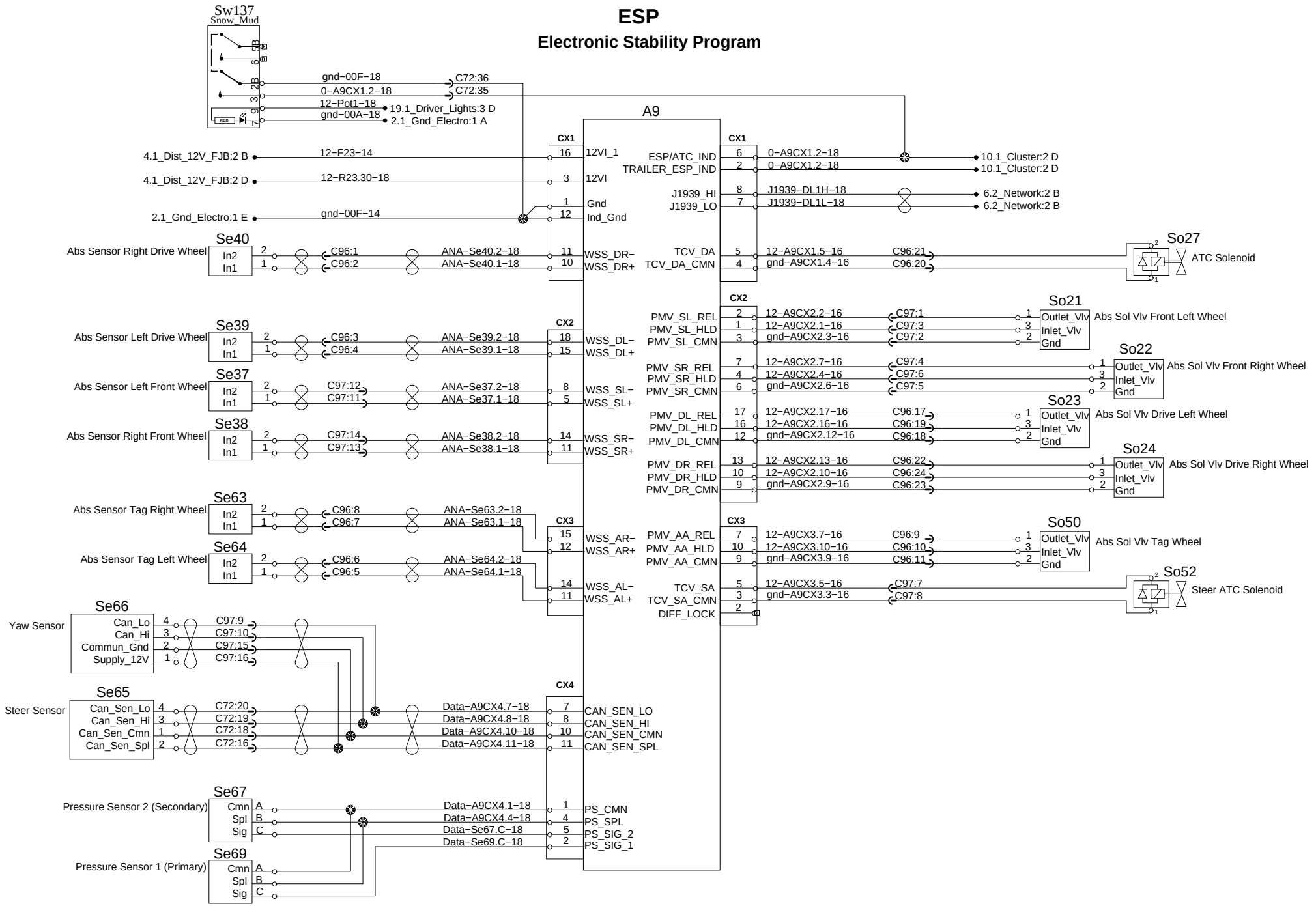

ESP

Electronic Stability Program

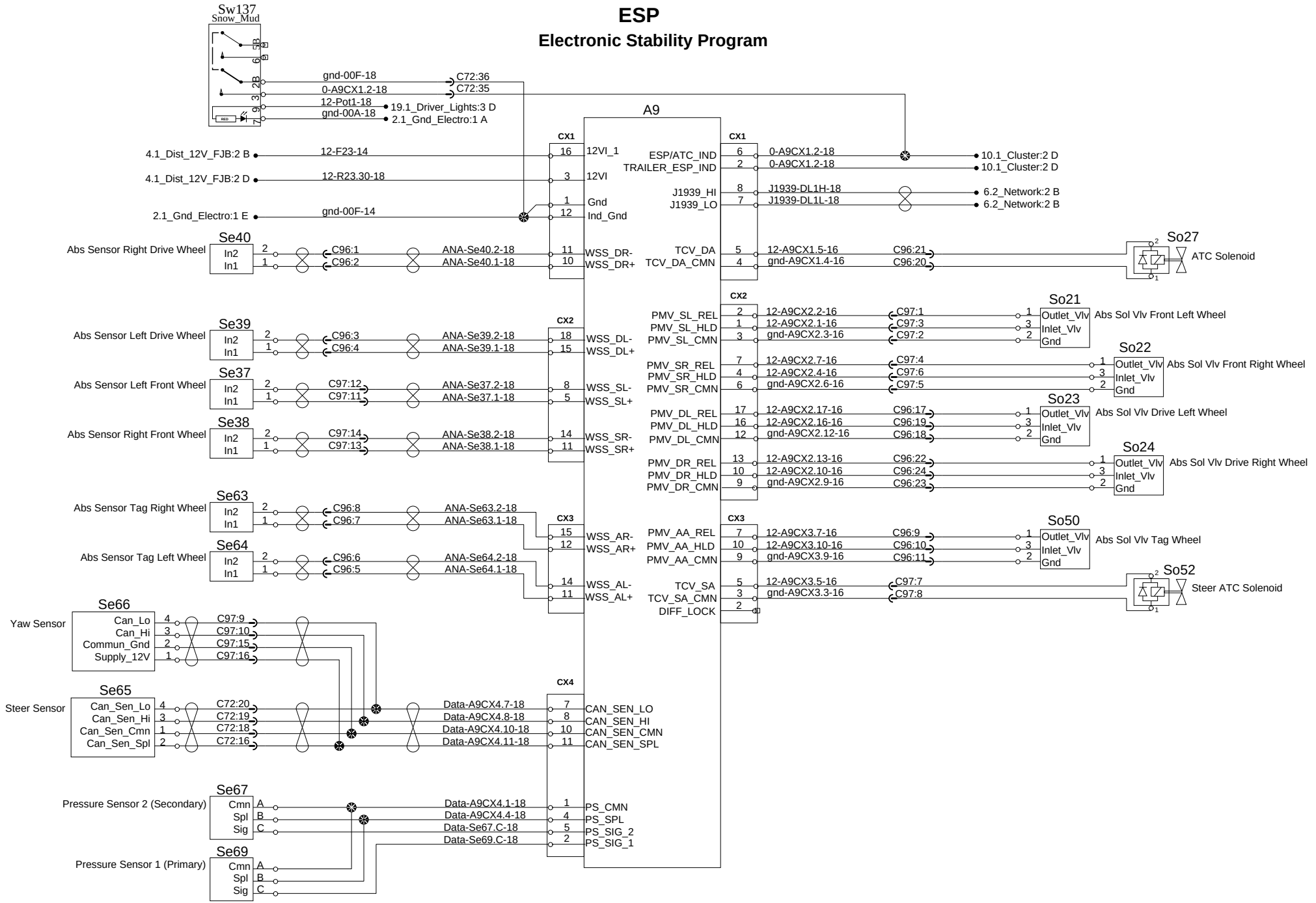

Driver assist

(FCM-ACC-LDW)

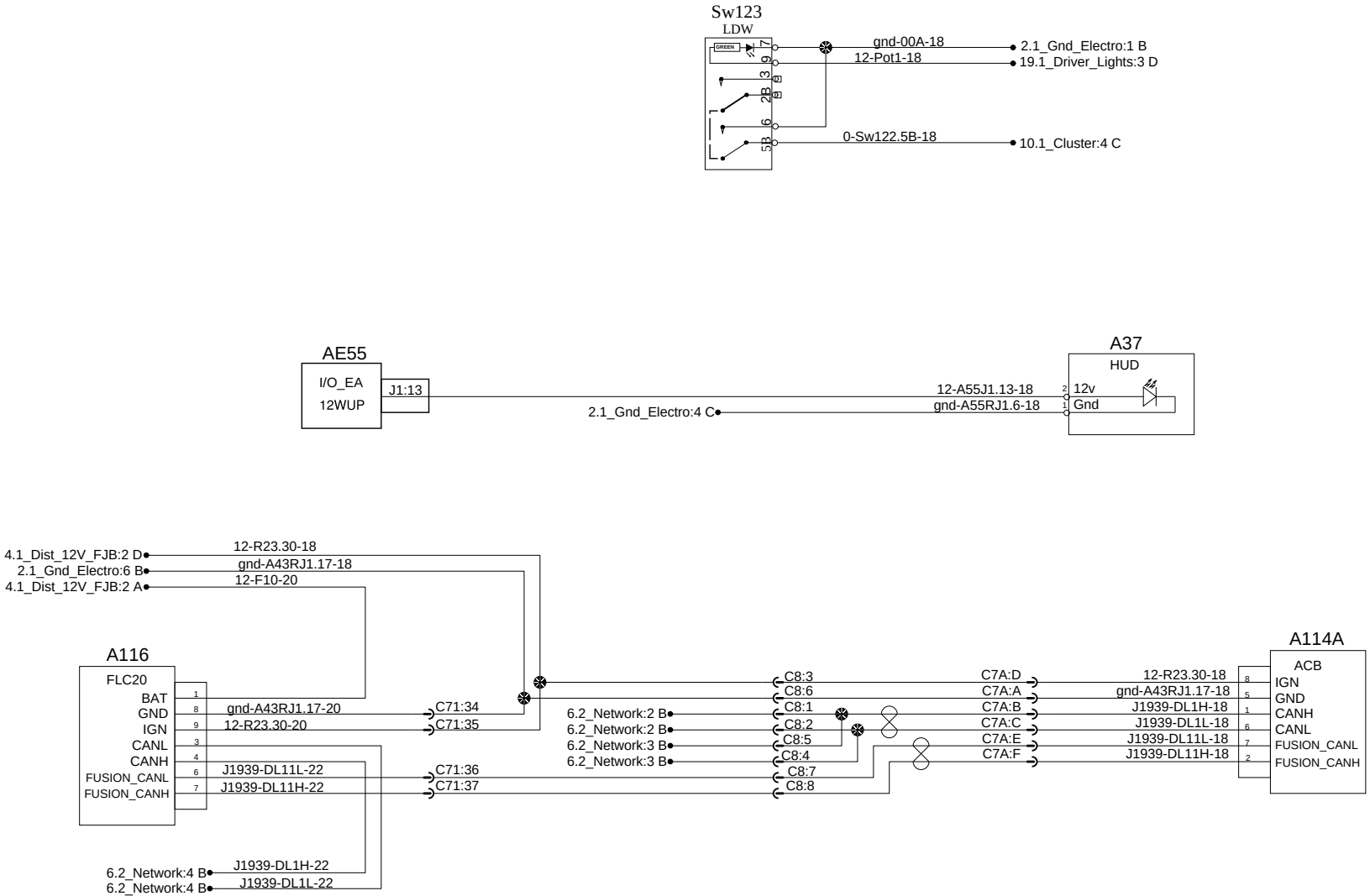

Driver seat

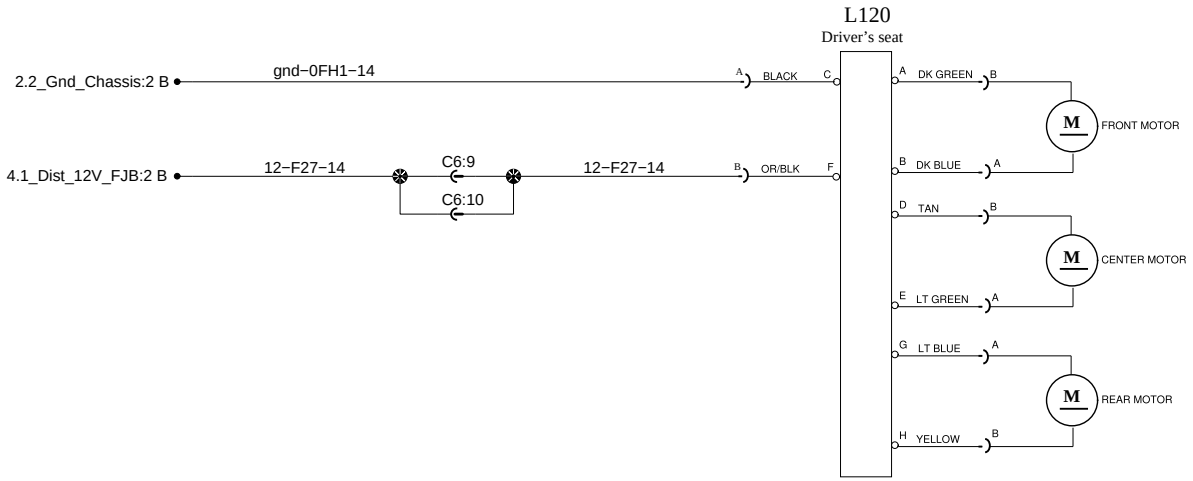
L120
Driver's seat
2.2_Gnd_Chassis:2 B
gnd−0FH1−14
A
BLACK
C
4.1_Dist_12V_FJB:2 B
12−F27−14
C6:9
C6:10
12−F27−14
B
OR/BLK
F
A
DK GREEN
B
M
FRONT MOTOR
B
DK BLUE
A
D
TAN
B
M
CENTER MOTOR
E
LT GREEN
A
G
LT BLUE
A
M
REAR MOTOR
H
YELLOW
B

HVAC defroster

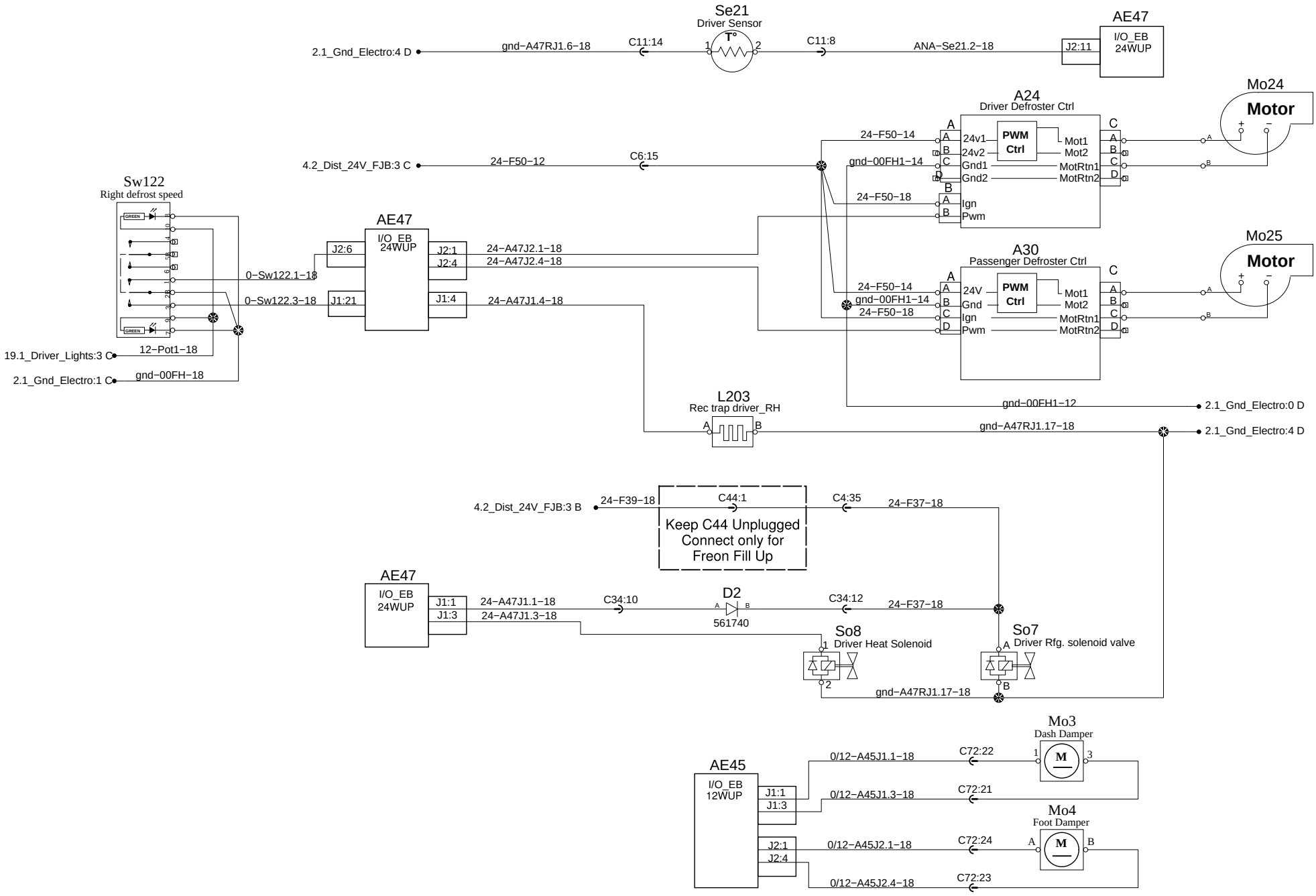

PREVOST®

WIRING DIAGRAM

No:D061670

Page:18.1

Rev:1

HVAC defroster

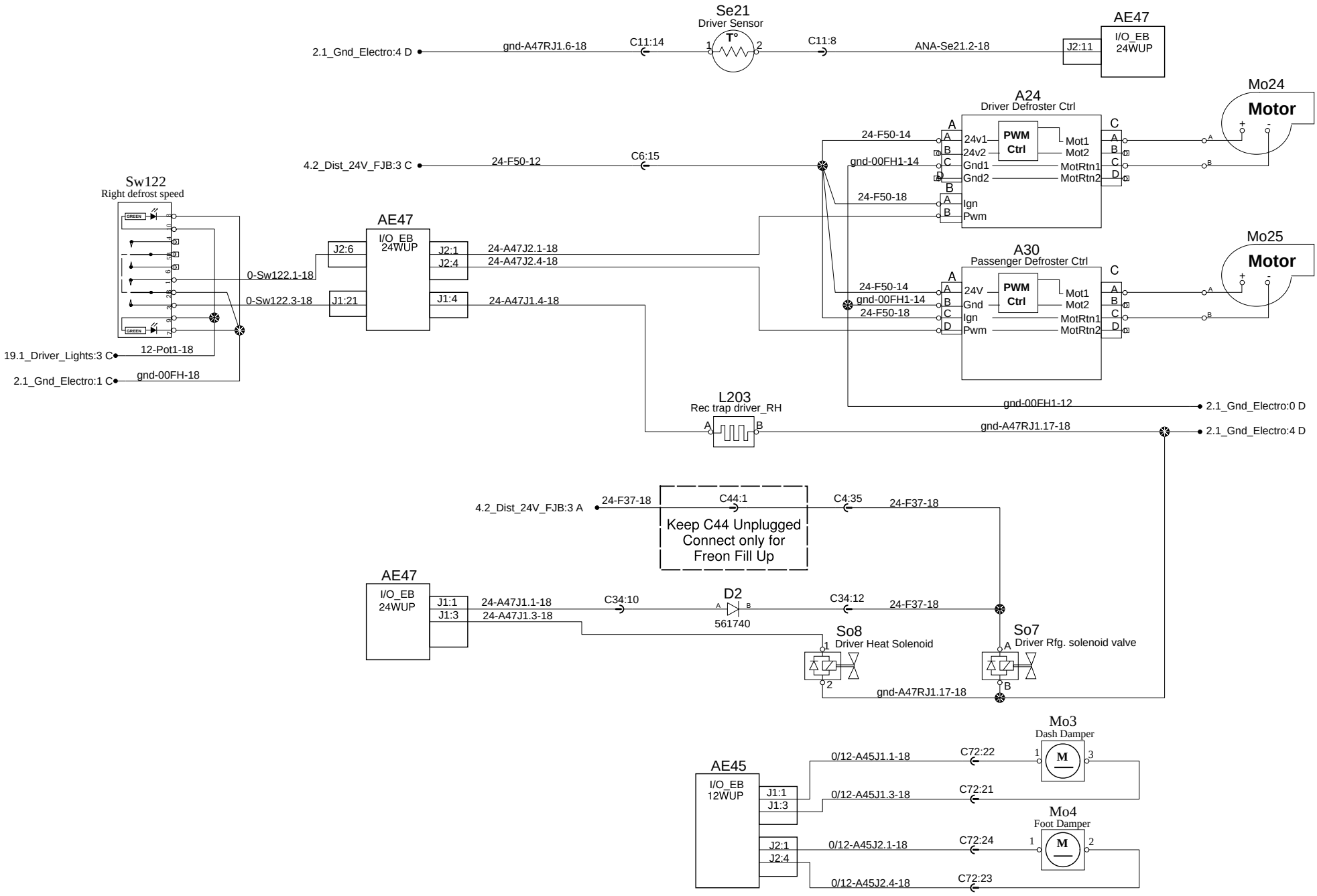

PREVOST®	WIRING DIAGRAM	No:D061670	Page:18.1	Rev:19

Full HVAC passengers

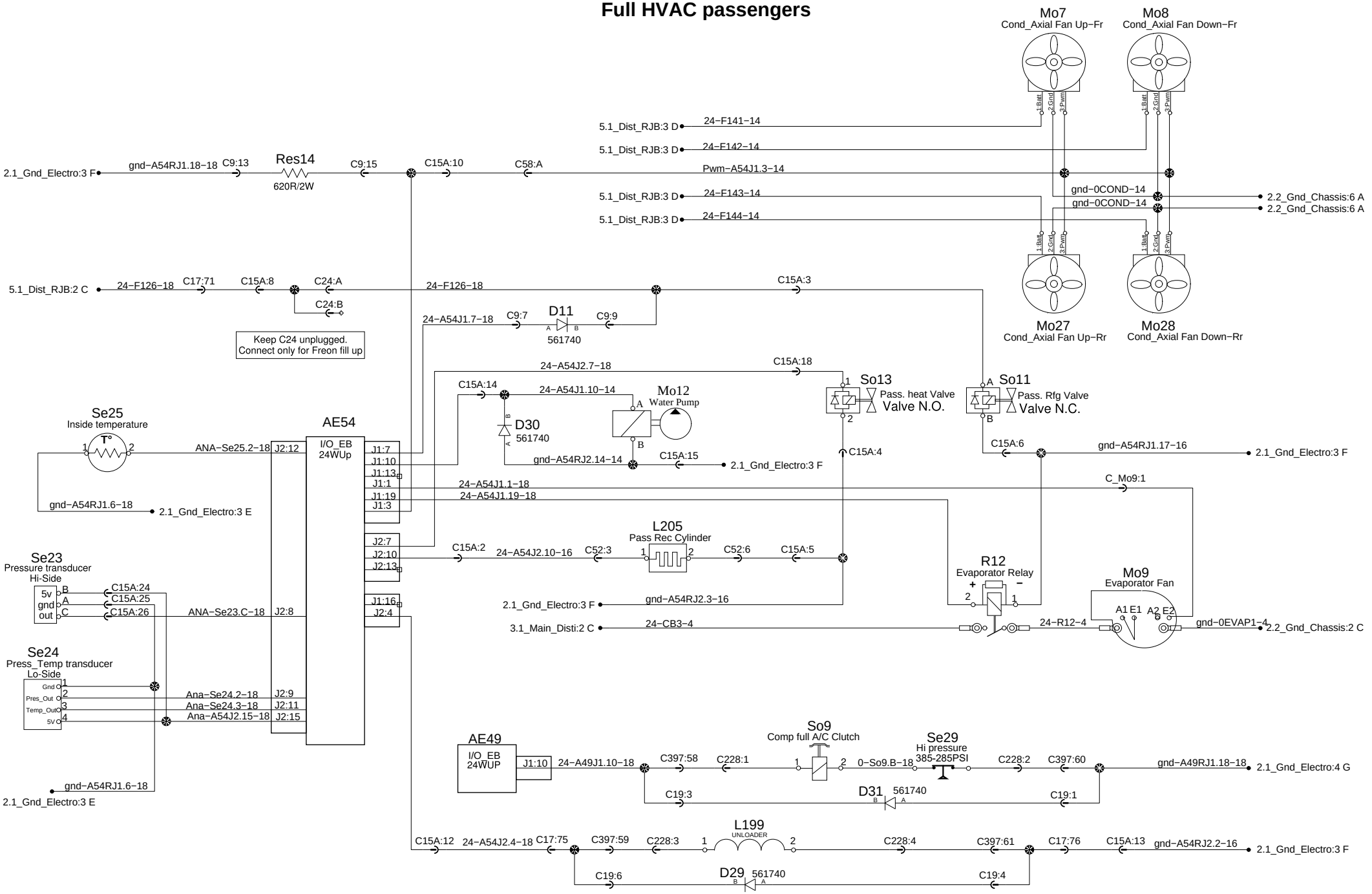

PREVOST®	WIRING DIAGRAM	No:D061670	Page:18.2	Rev:8

Full HVAC passengers

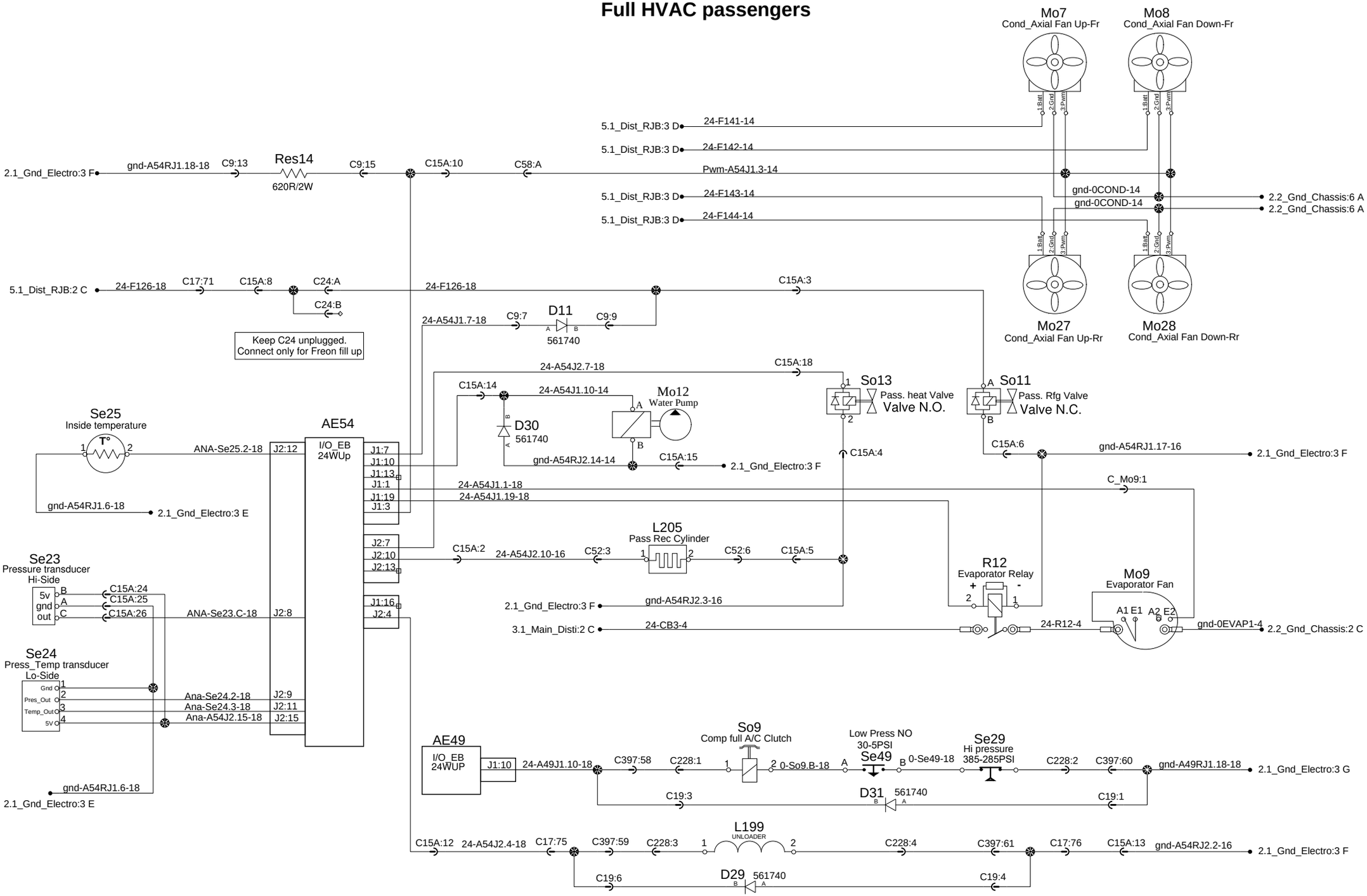

Full HVAC passengers

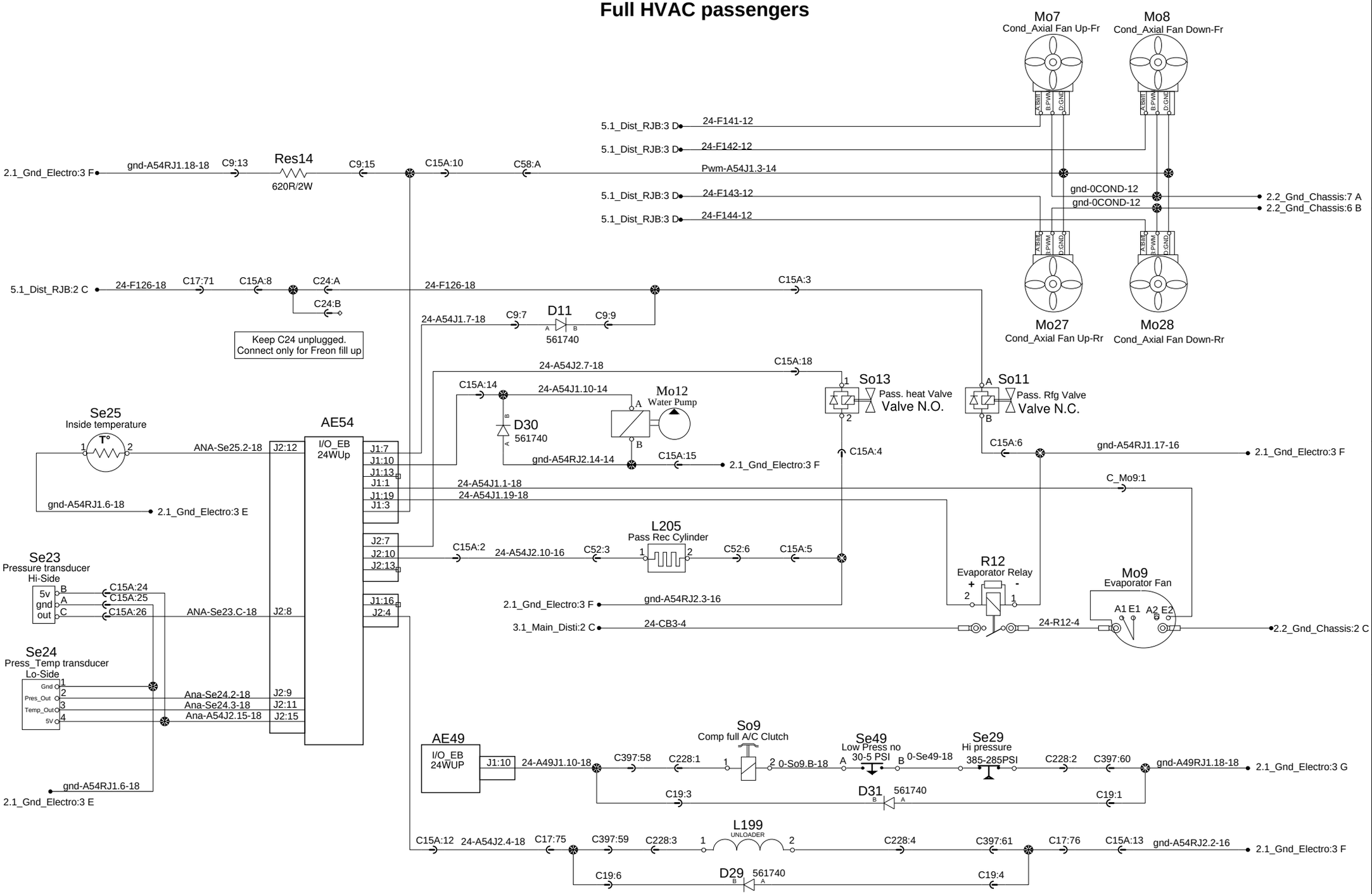

PREVOST®	WIRING DIAGRAM	No:D061670	Page:18.2	Rev:24

Full HVAC passengers

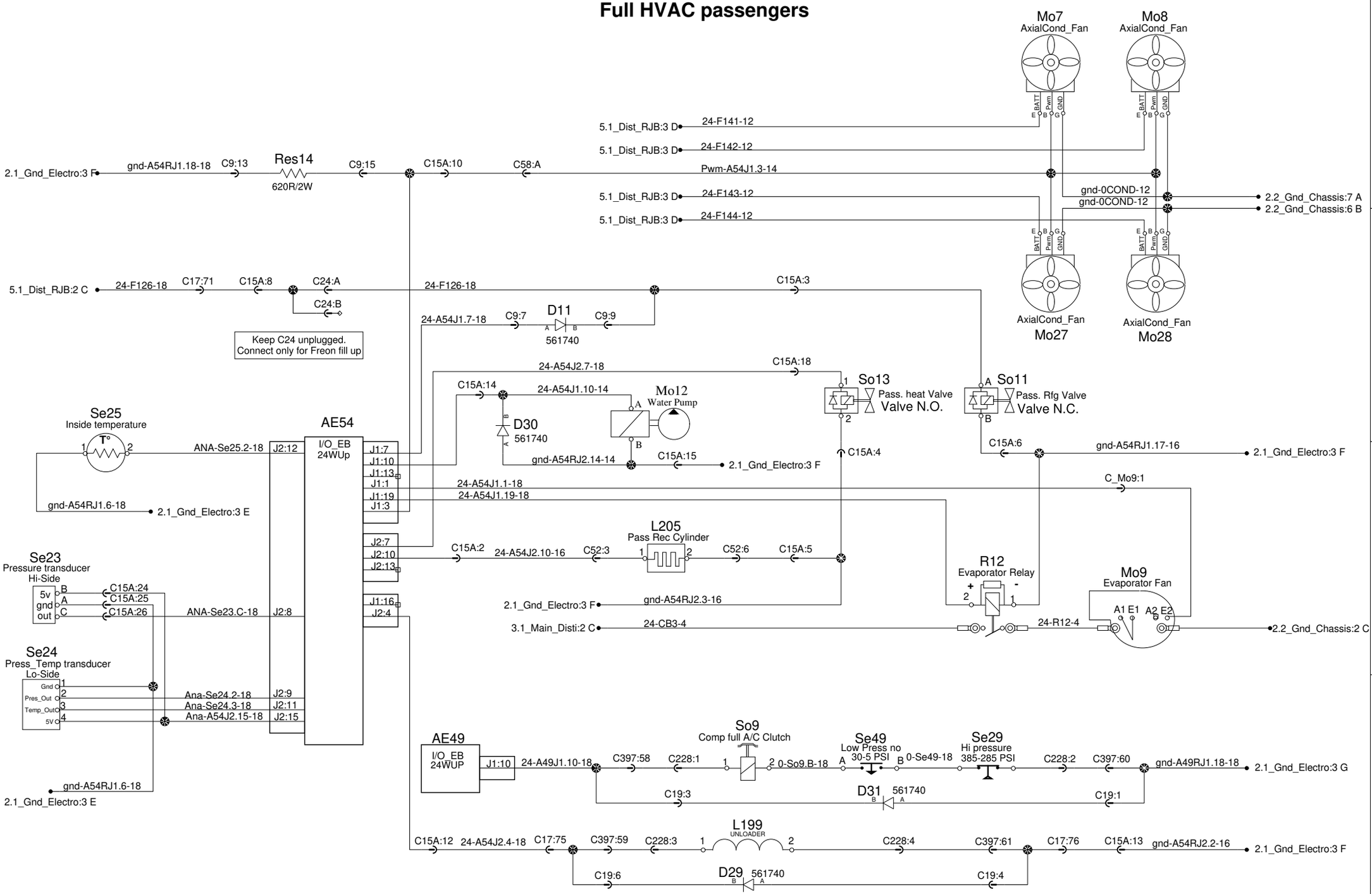

Full HVAC passengers

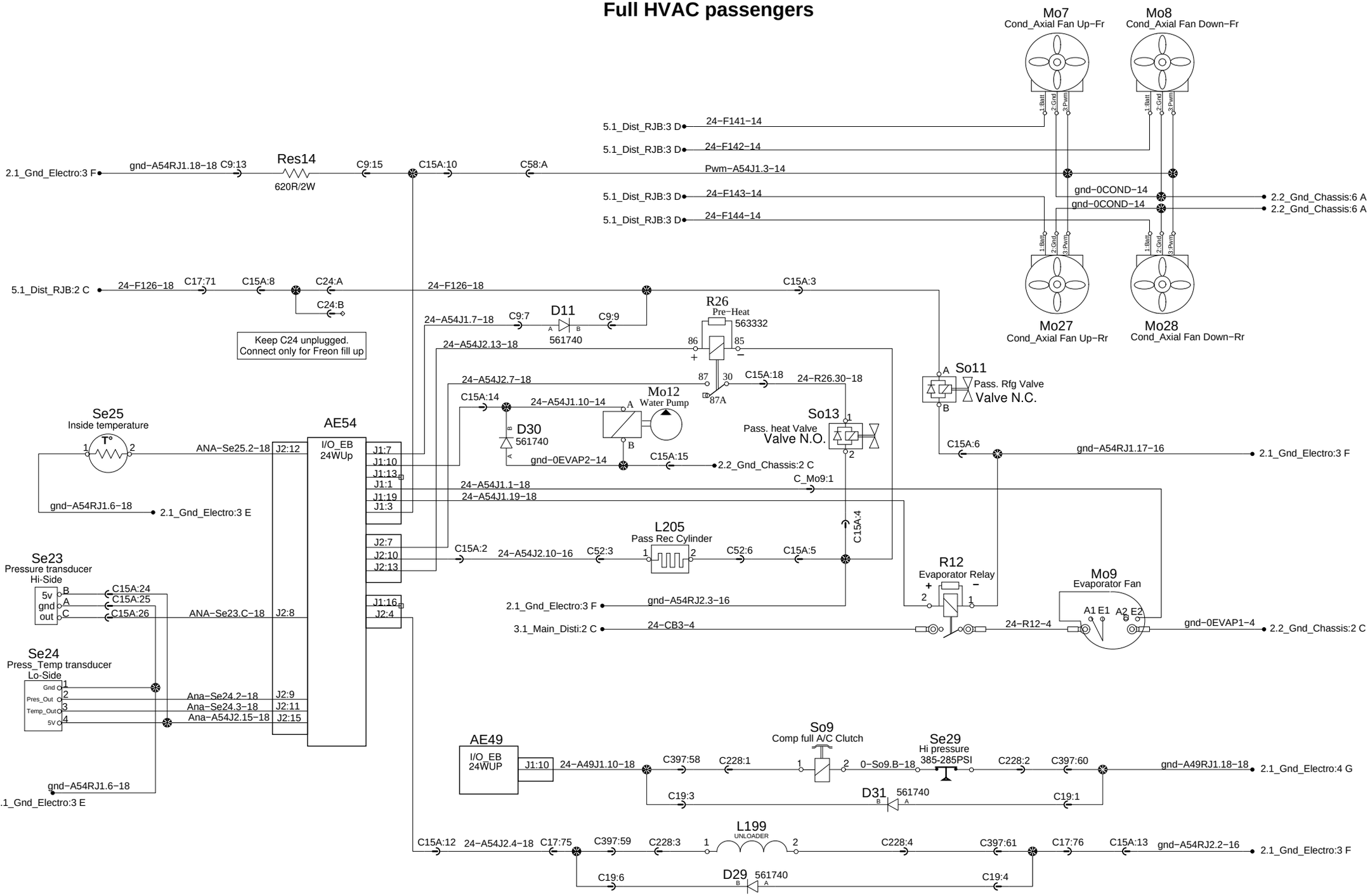

Small A/C

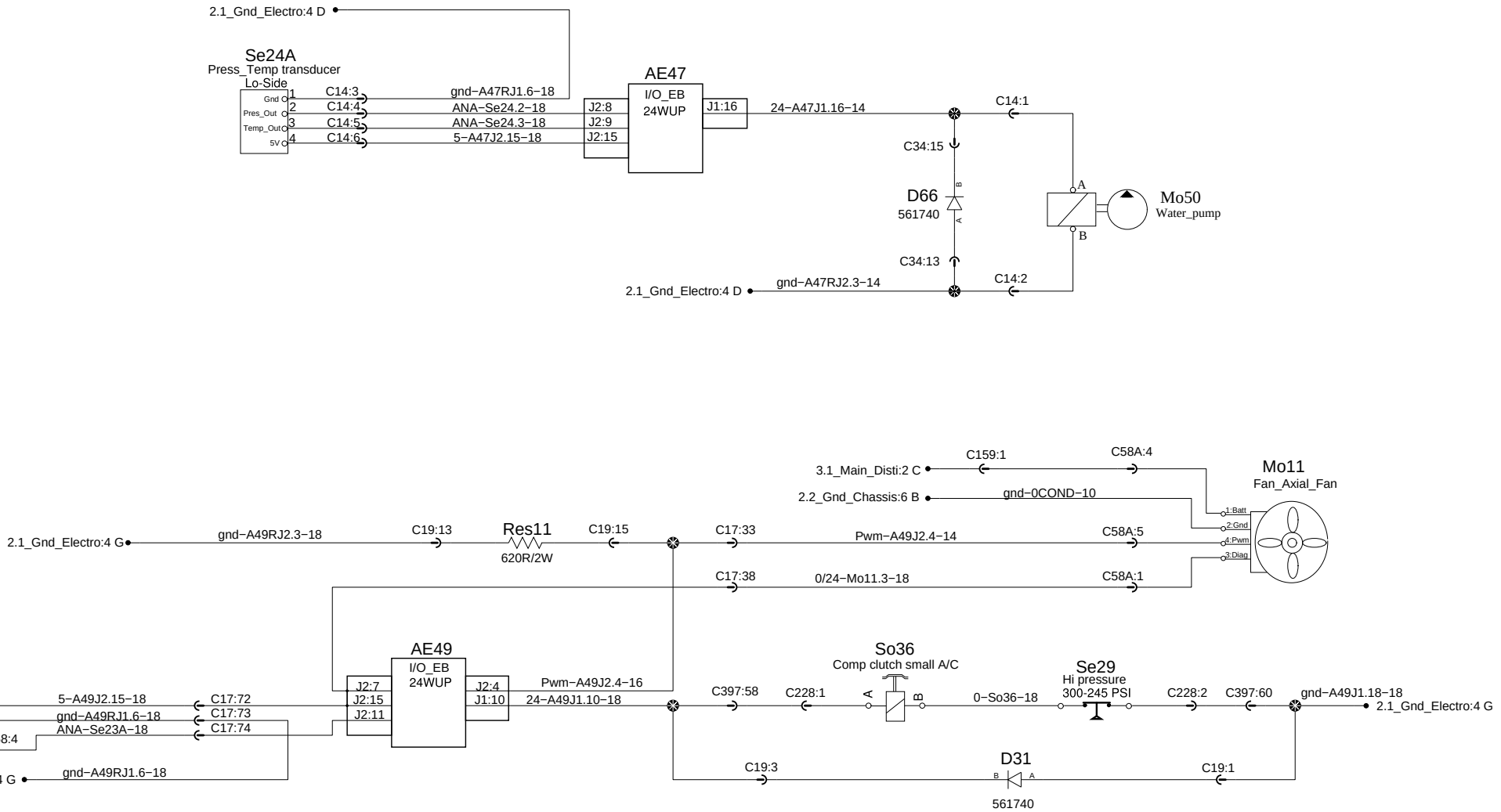
2.1_Gnd_Electro:4 D
Se24A
Press_Temp transducer
Lo-Side
Gnd
Pres_Out
Temp_Out
5V
C14:3
C14:4
C14:5
C14:6
gnd−A47RJ1.6−18
ANA−Se24.2−18
ANA−Se24.3−18
5−A47J2.15−18
AE47
I/O_EB
24WUP
J2:8
J2:9
J2:15
J1:16
24−A47J1.16−14
C14:1
C34:15
D66
561740
A
B
Mo50
Water_pump
C34:13
C14:2
gnd−A47RJ2.3−14
3.1_Main_Disti:2 C
C159:1
C58A:4
Mo11
Fan_Axial_Fan
2.2_Gnd_Chassis:6 B
gnd−0COND−10
1:Batt
2:Gnd
4:Pwm
3:Diag
2.1_Gnd_Electro:4 G
gnd−A49RJ2.3−18
C19:13
Res11
620R/2W
C19:15
C17:33
Pwm−A49J2.4−14
C58A:5
C17:38
0/24−Mo11.3−18
C58A:1
Se23A
Pressure transducer
Hi-Side
5v
gnd
out
C58A:2
C58A:6
C158:4
5−A49J2.15−18
gnd−A49RJ1.6−18
ANA−Se23A−18
C17:72
C17:73
C17:74
AE49
I/O_EB
24WUP
J2:7
J2:15
J2:11
J2:4
J1:10
Pwm−A49J2.4−16
24−A49J1.10−18
So36
Comp clutch small A/C
C397:58
C228:1
0−So36−18
Se29
Hi pressure
300-245 PSI
C228:2
C397:60
gnd−A49J1.18−18
2.1_Gnd_Electro:4 G
C19:3
D31
561740
C19:1

Cust Adapt. Move alternators on cold side (Small AC not installed at delivery)

Refer to P18.3 STD for all details

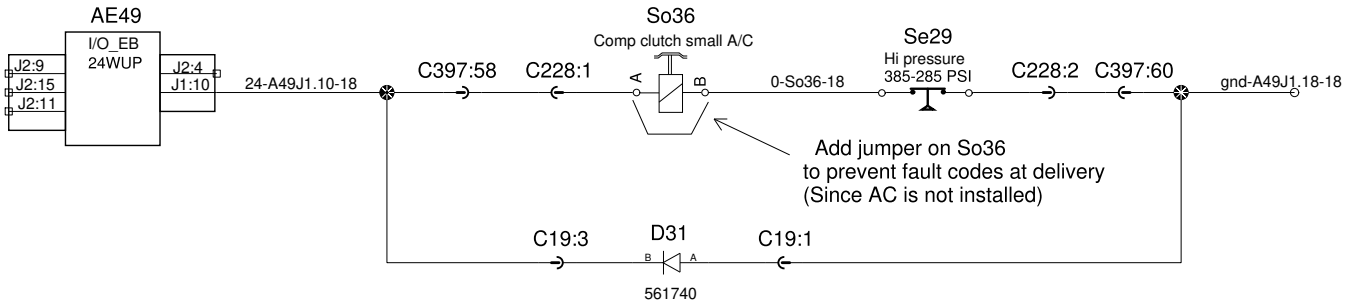

Dash backlighting & Driver's lights

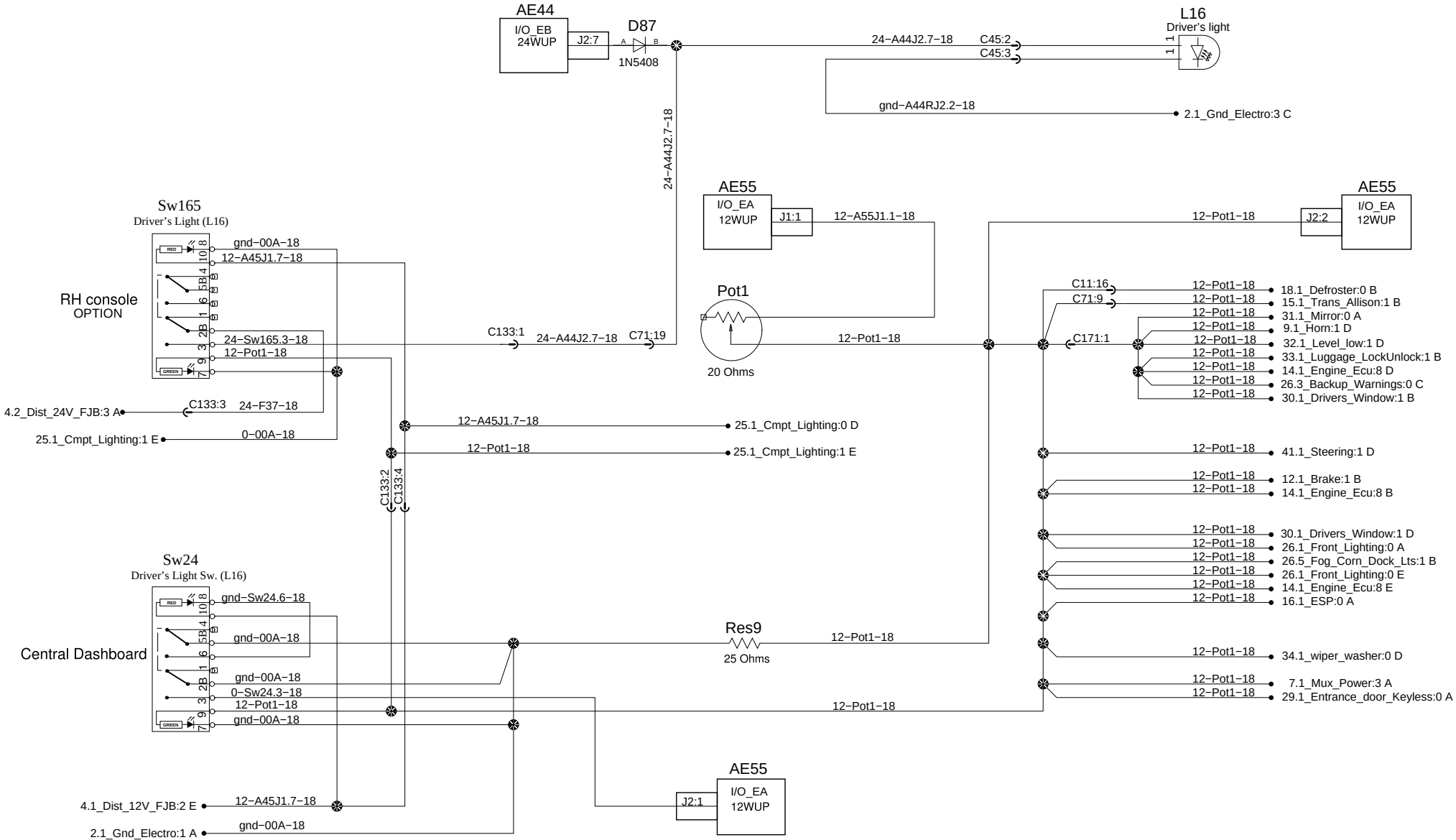

PREVOST®	WIRING DIAGRAM	No:D061670	Page:19.1	Rev:6

Dash backlighting & Driver's lights

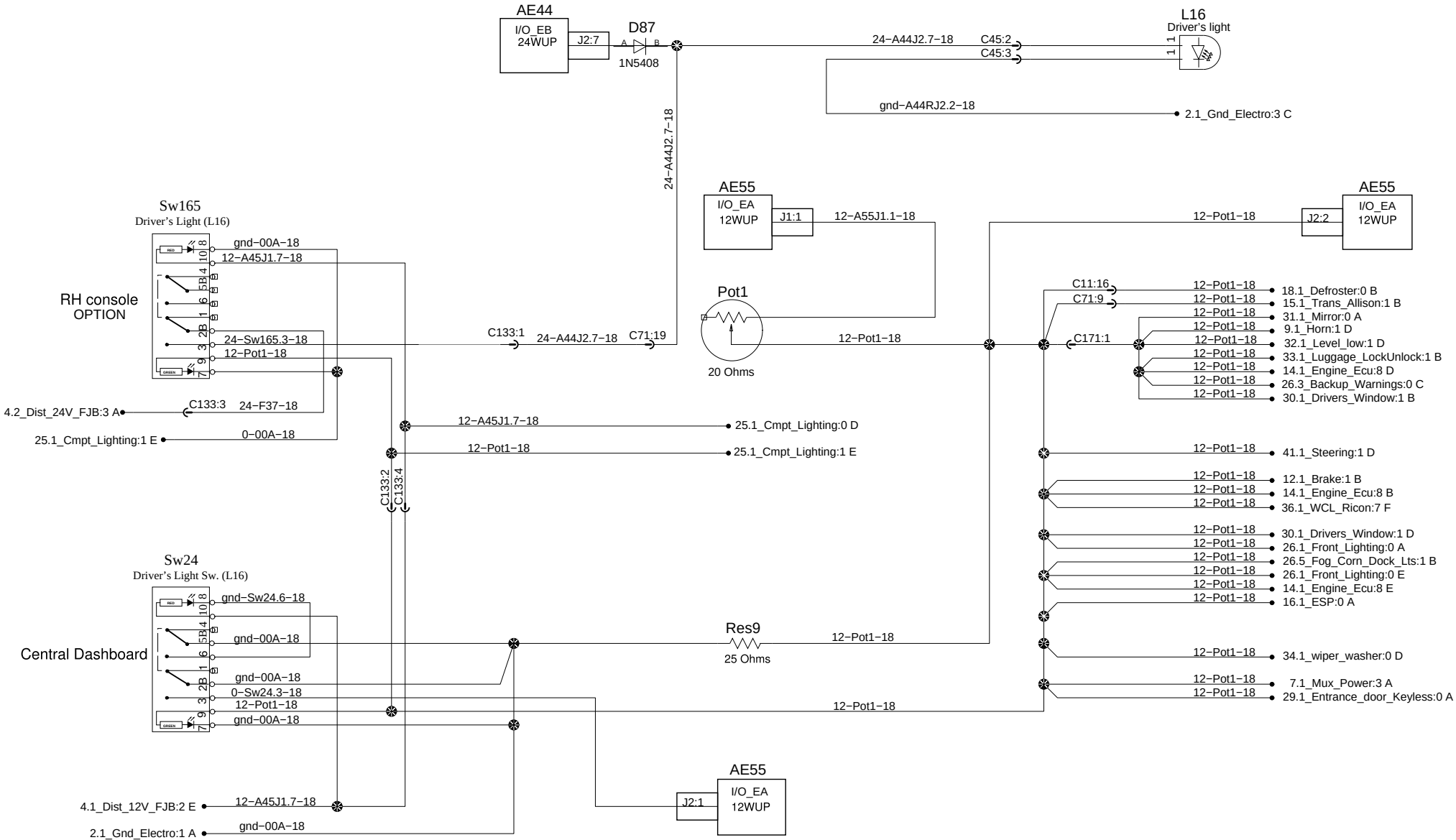

PREVOST®	WIRING DIAGRAM	No:D061670	Page:19.1	Rev:9

Dash backlighting & Driver's lights

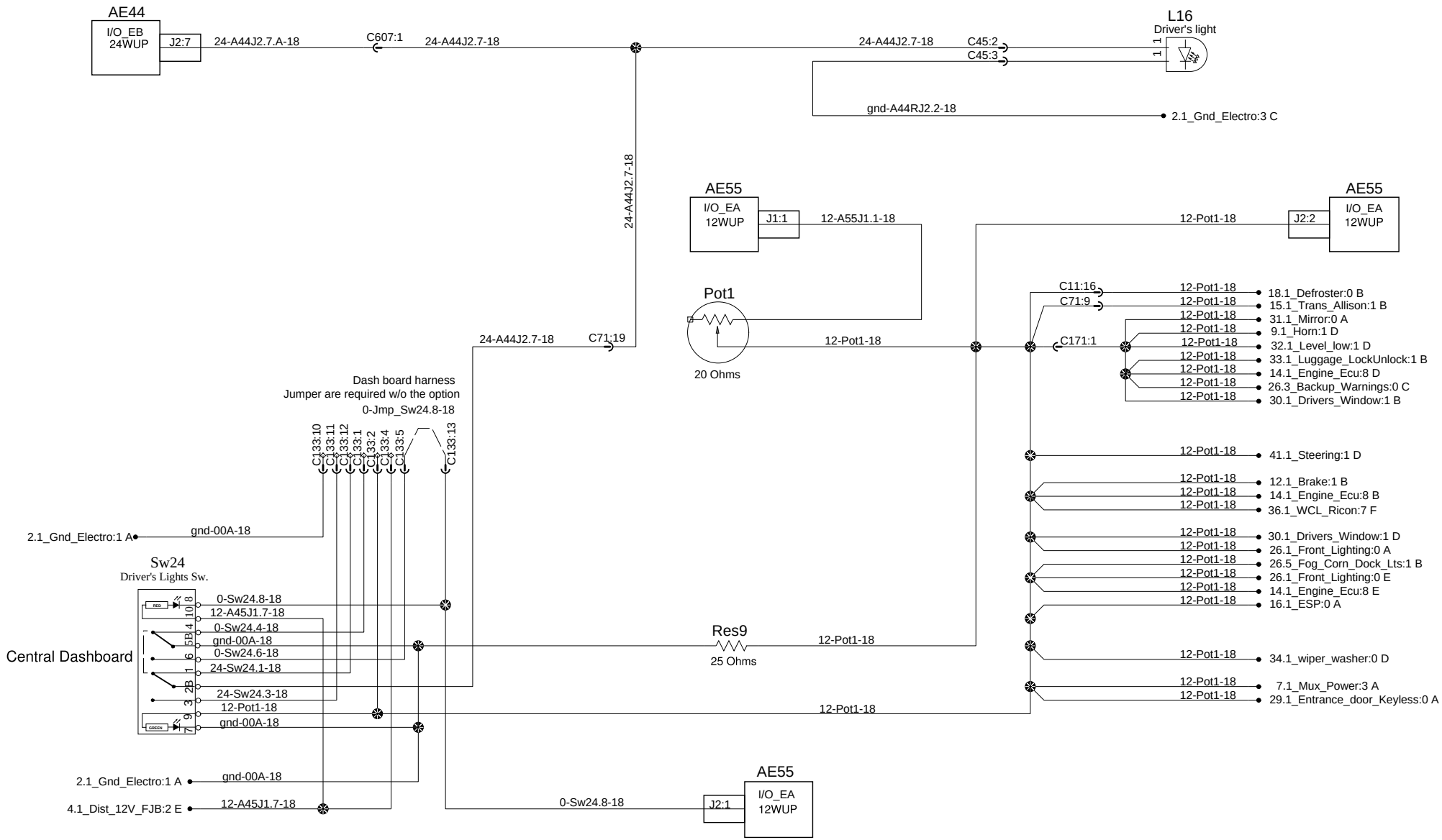

PREVOST®	WIRING DIAGRAM	No:D061670	Page:19.1	Rev:12

Dash backlighting & Driver's lights

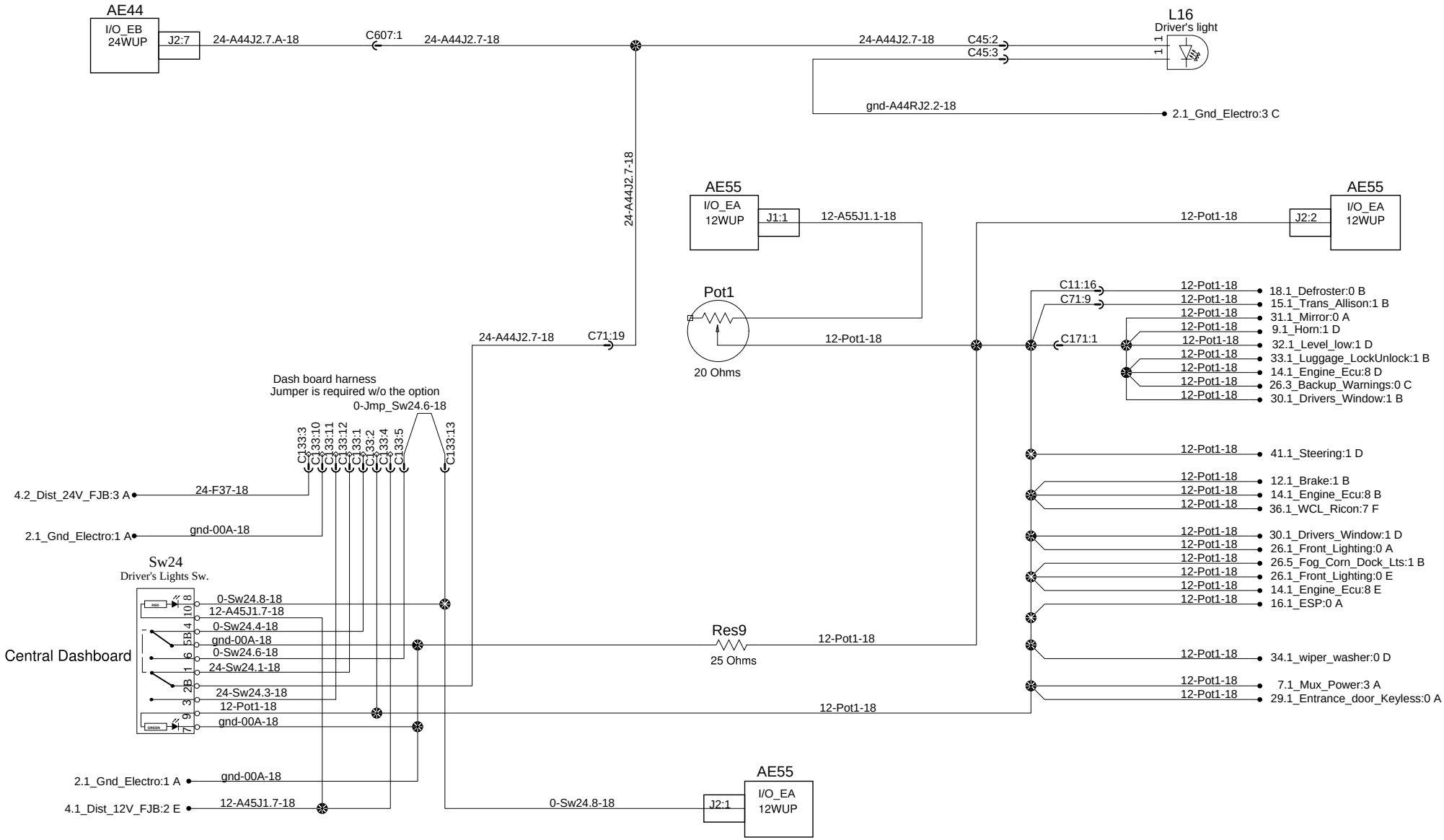

PREVOST®	WIRING DIAGRAM	No:D061670	Page:19.1	Rev:15

Dash backlighting & Driver's lights

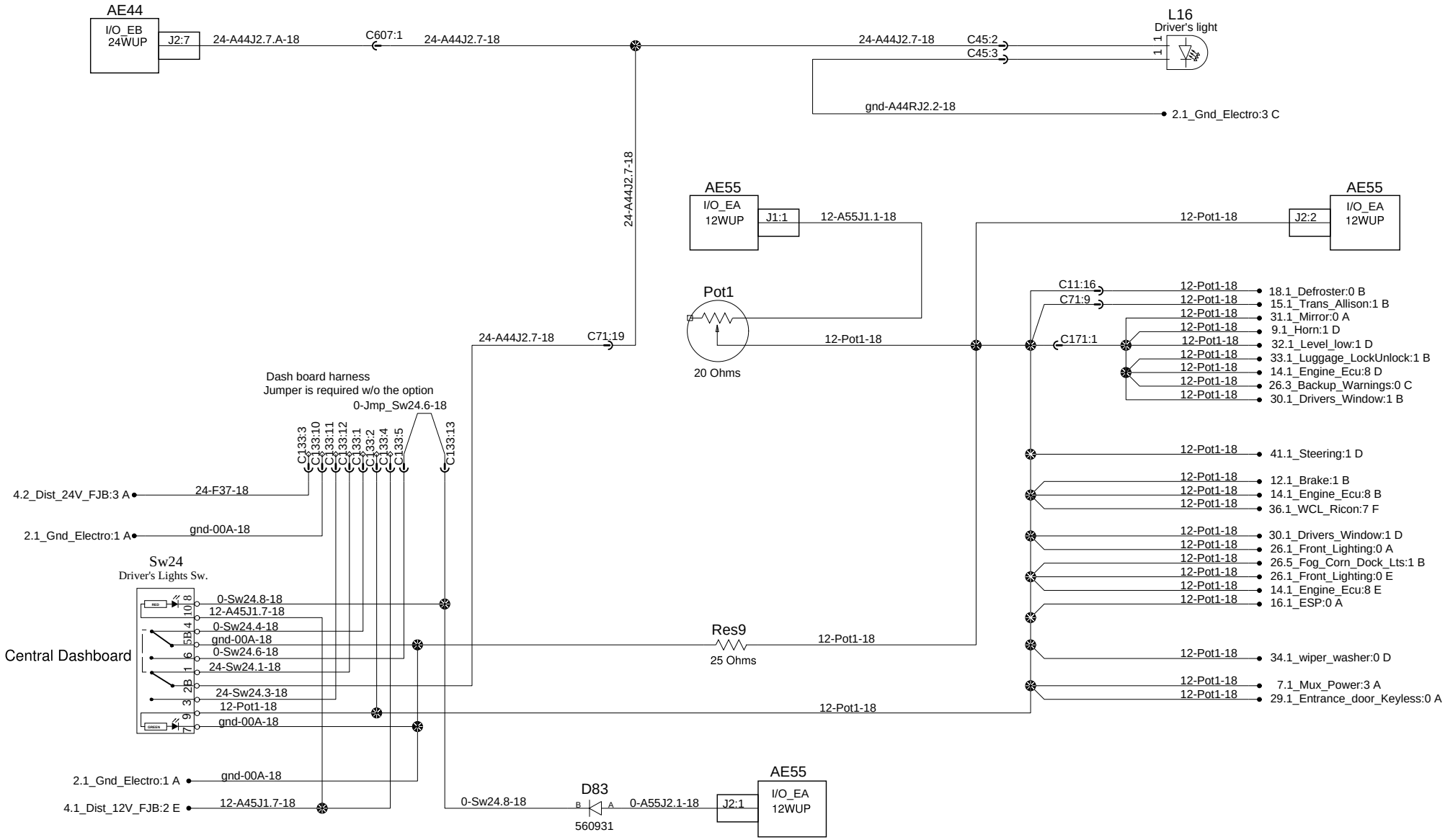

PREVOST®	WIRING DIAGRAM	No:D061670	Page:19.1	Rev:16

Dash backlighting & Driver's lights

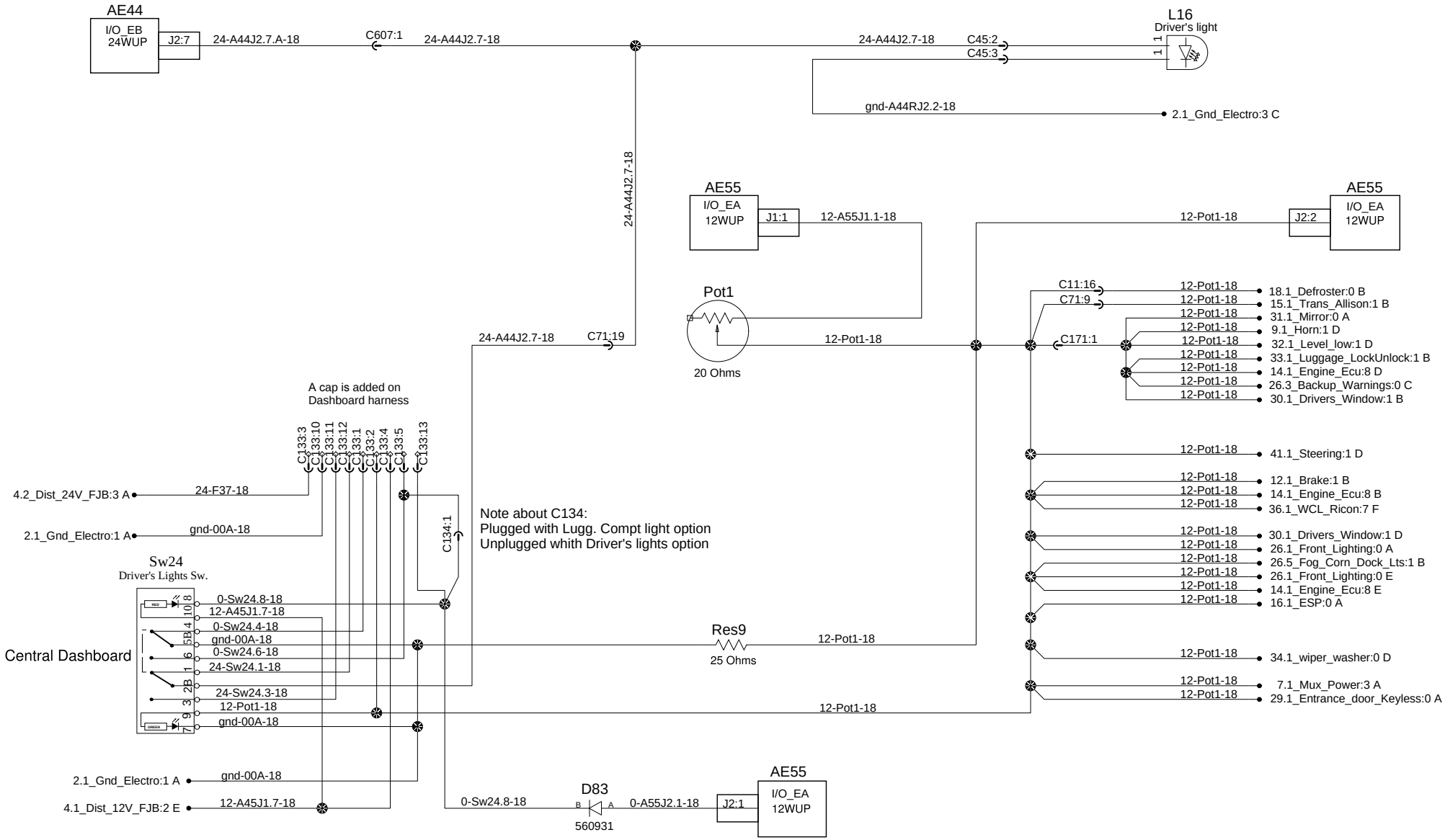

PREVOST®	WIRING DIAGRAM	No:D061670	Page:19.1	Rev:19

Dash backlighting & Driver's lights

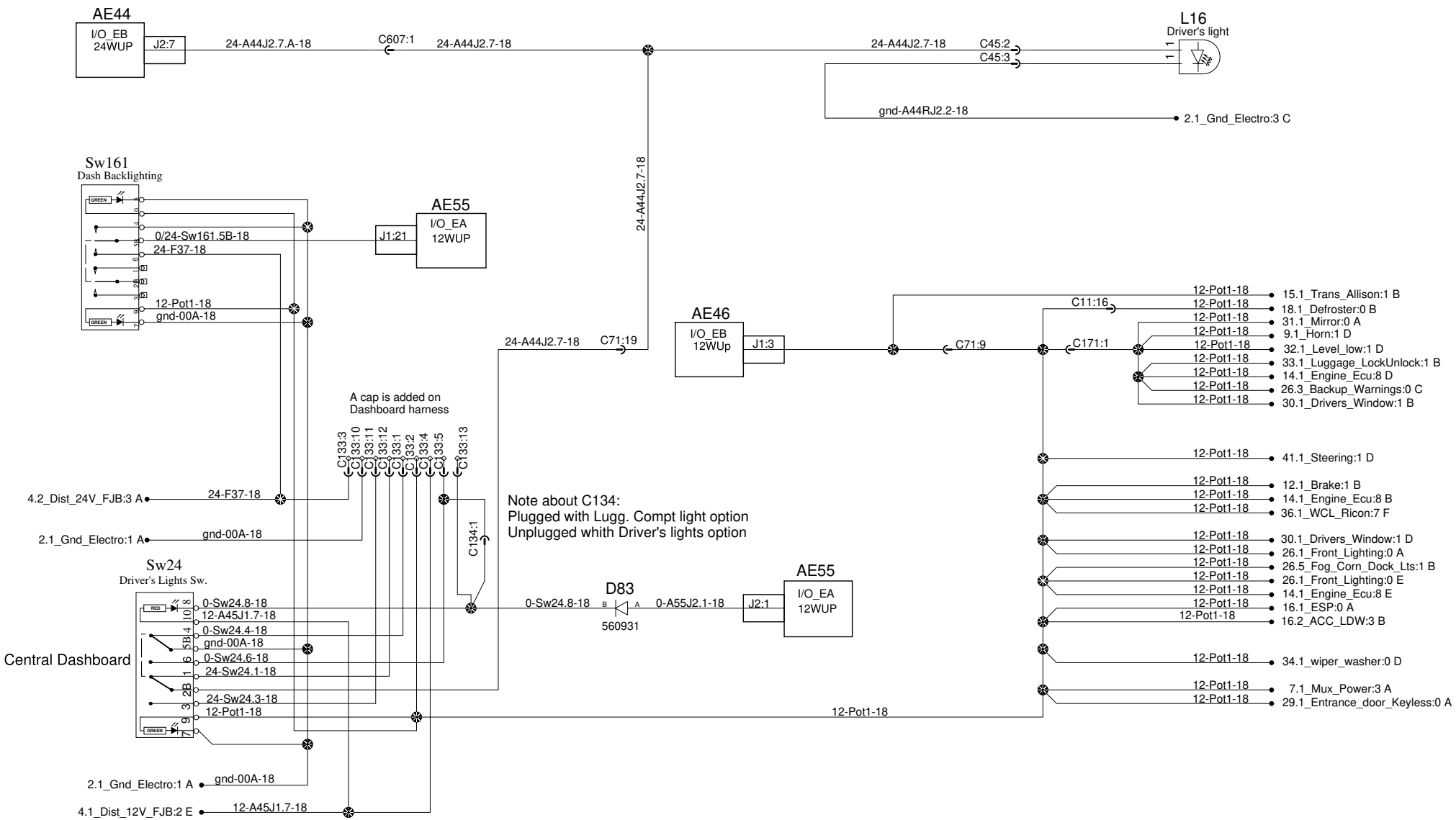

Driver's Lights

Customer Adaptation RH Console Switch for Dirver's lighs

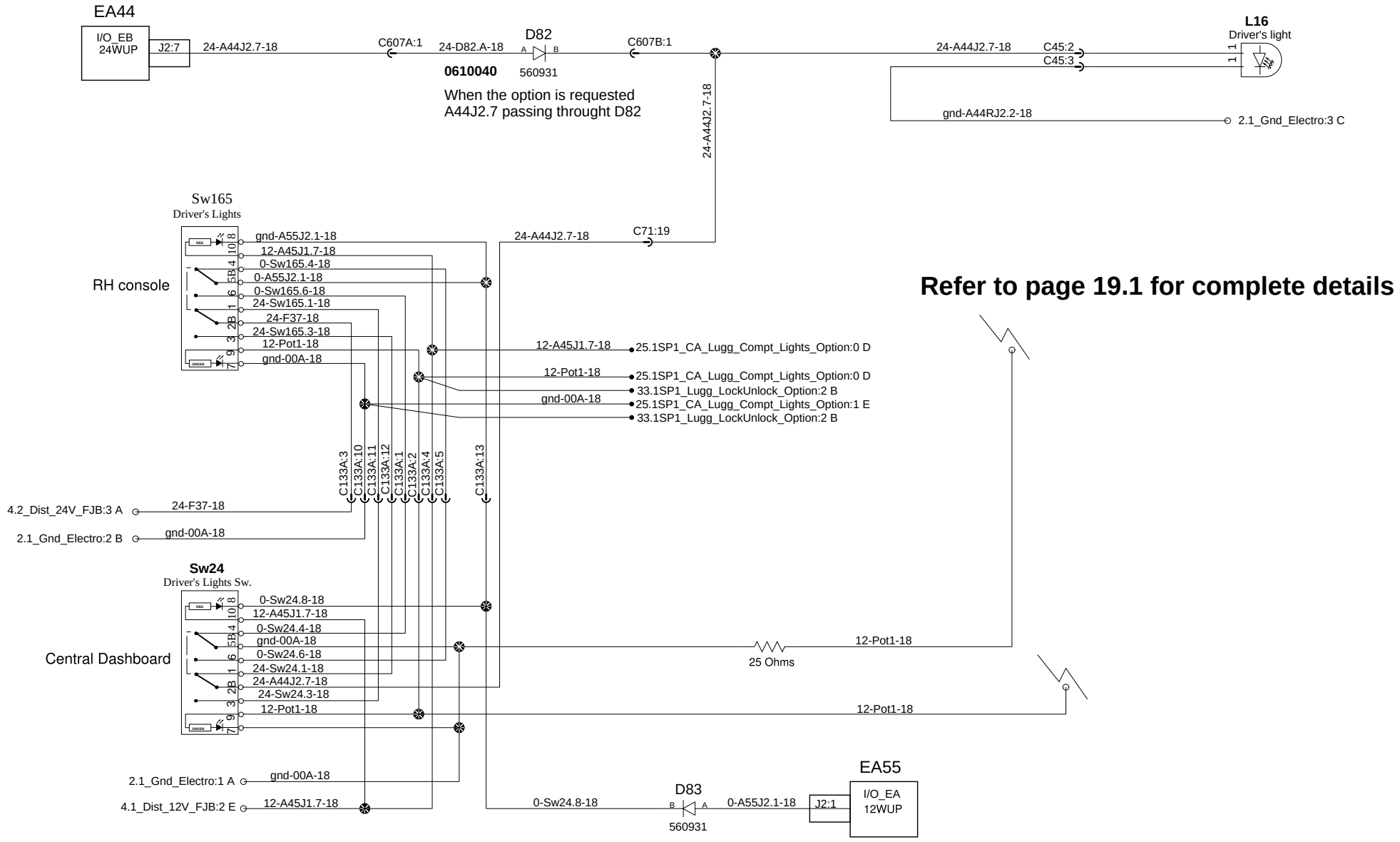

Front left Slide Out (Option)

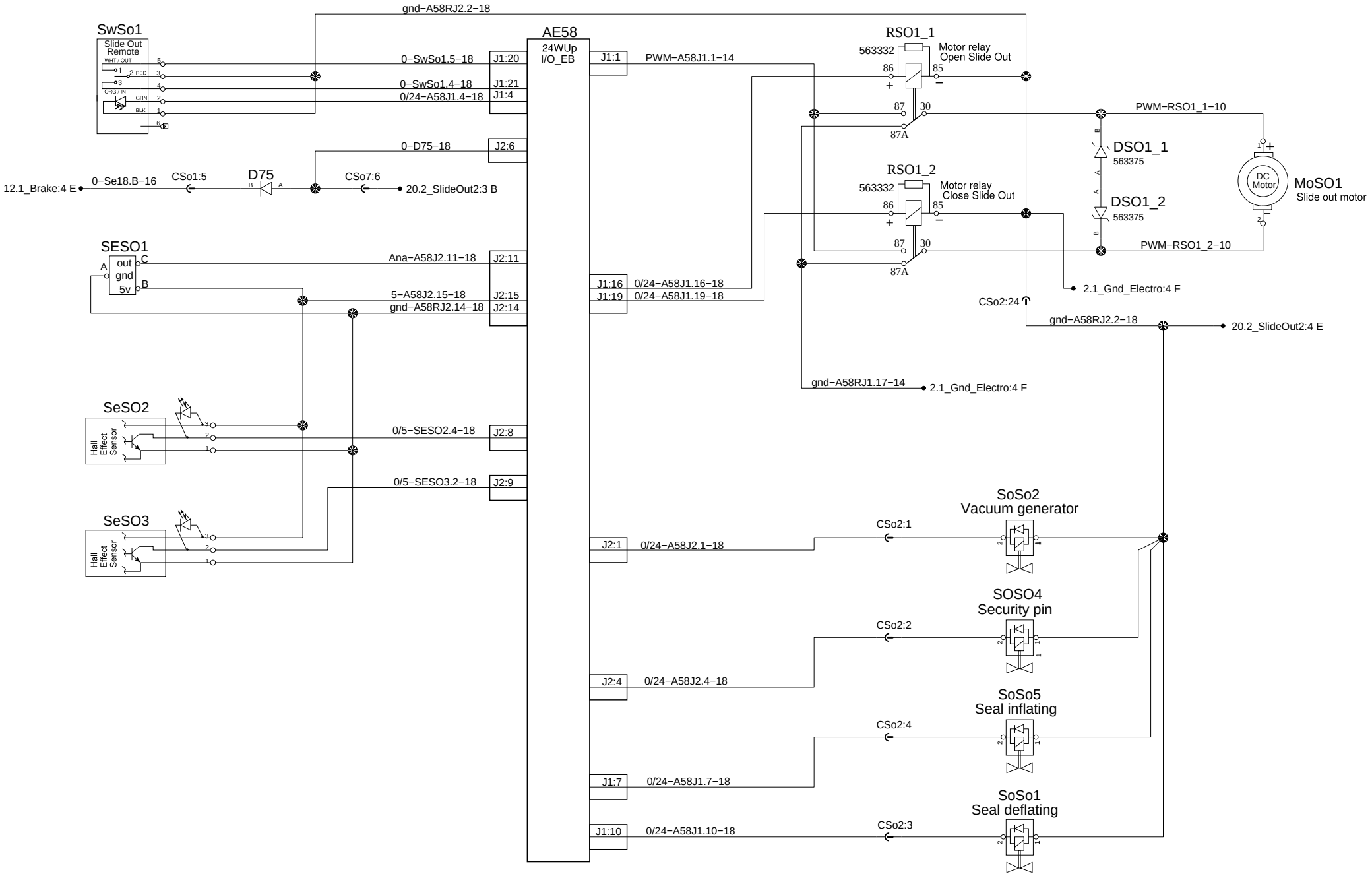

PREVOST®	WIRING DIAGRAM	No:D061670	Page:20.1	Rev:7

Front left Slide Out (Option)

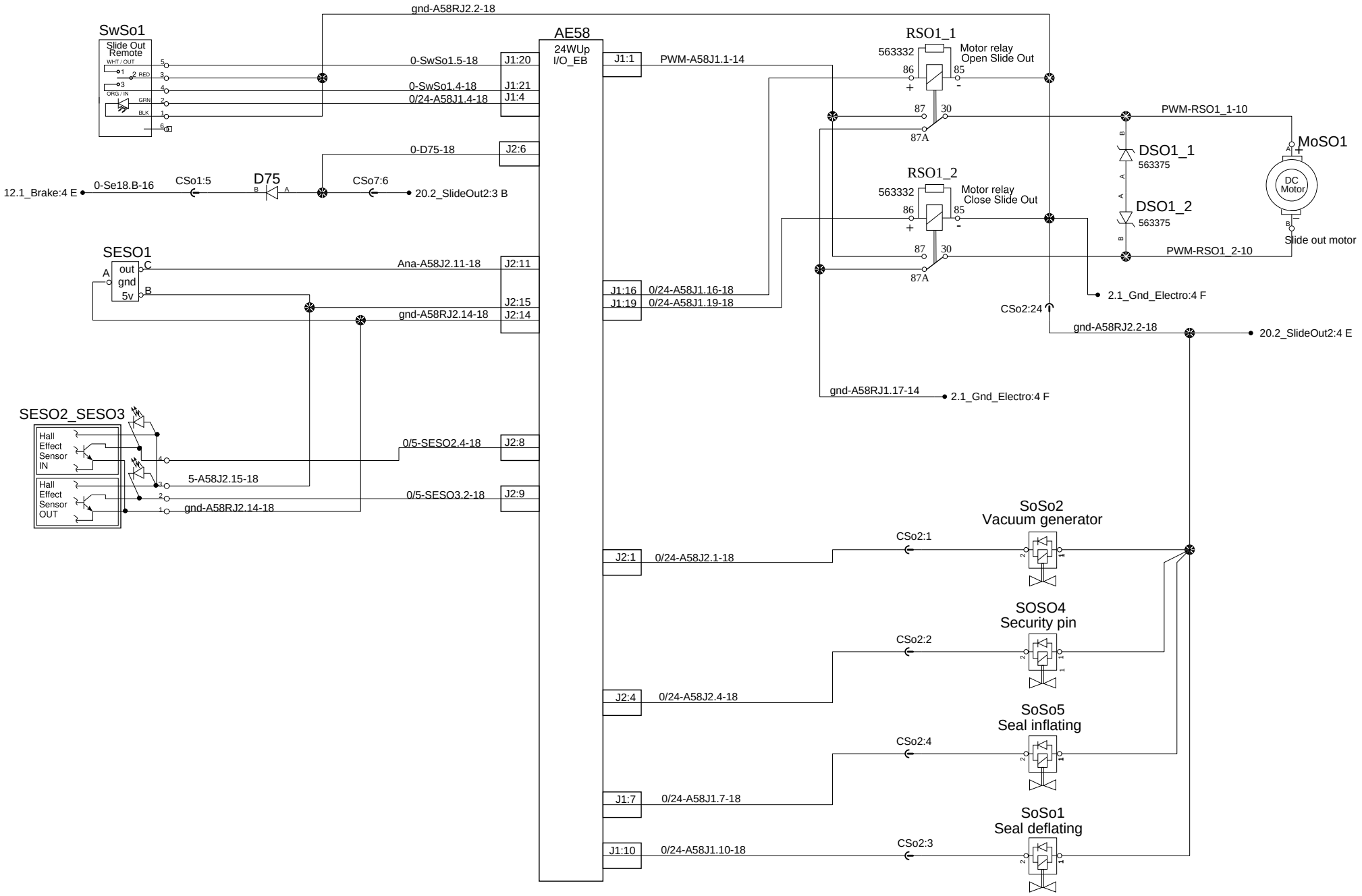

Front left Slide Out (Option)

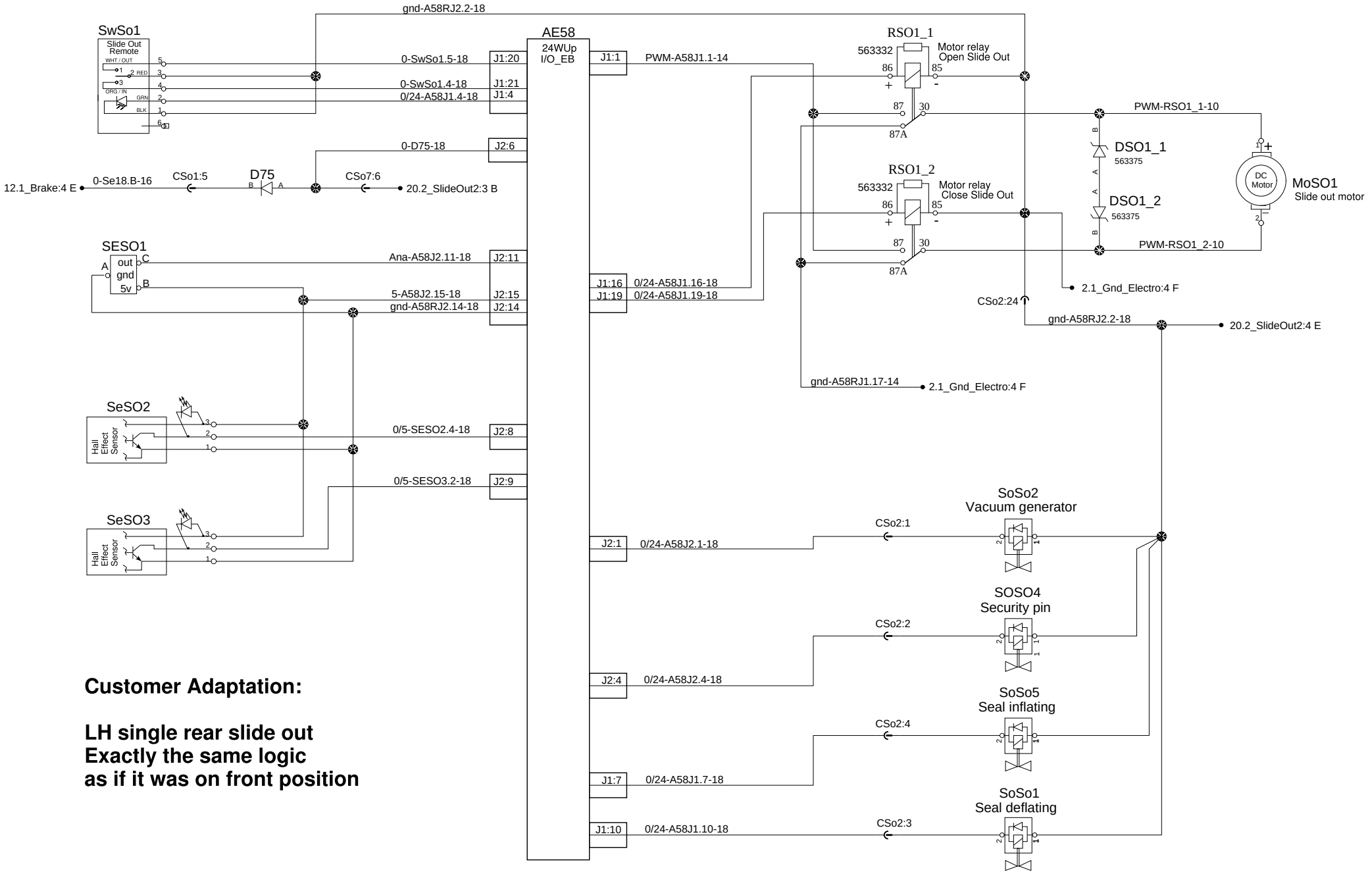

Customer Adaptation:

LH single rear slide out
Exactly the same logic
as if it was on front position

Rear left Slide Out (Option)

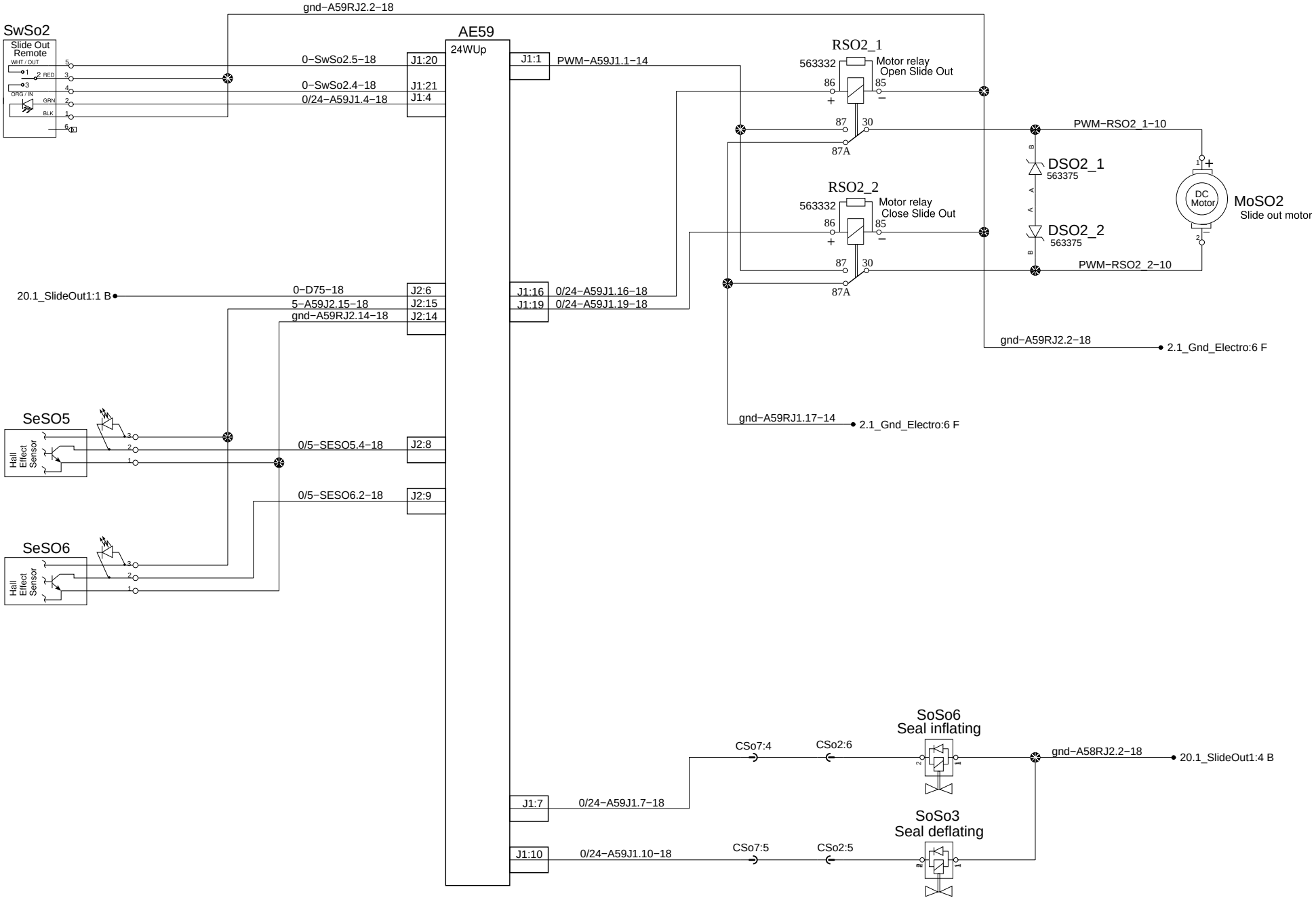

Rear left Slide Out (Option)

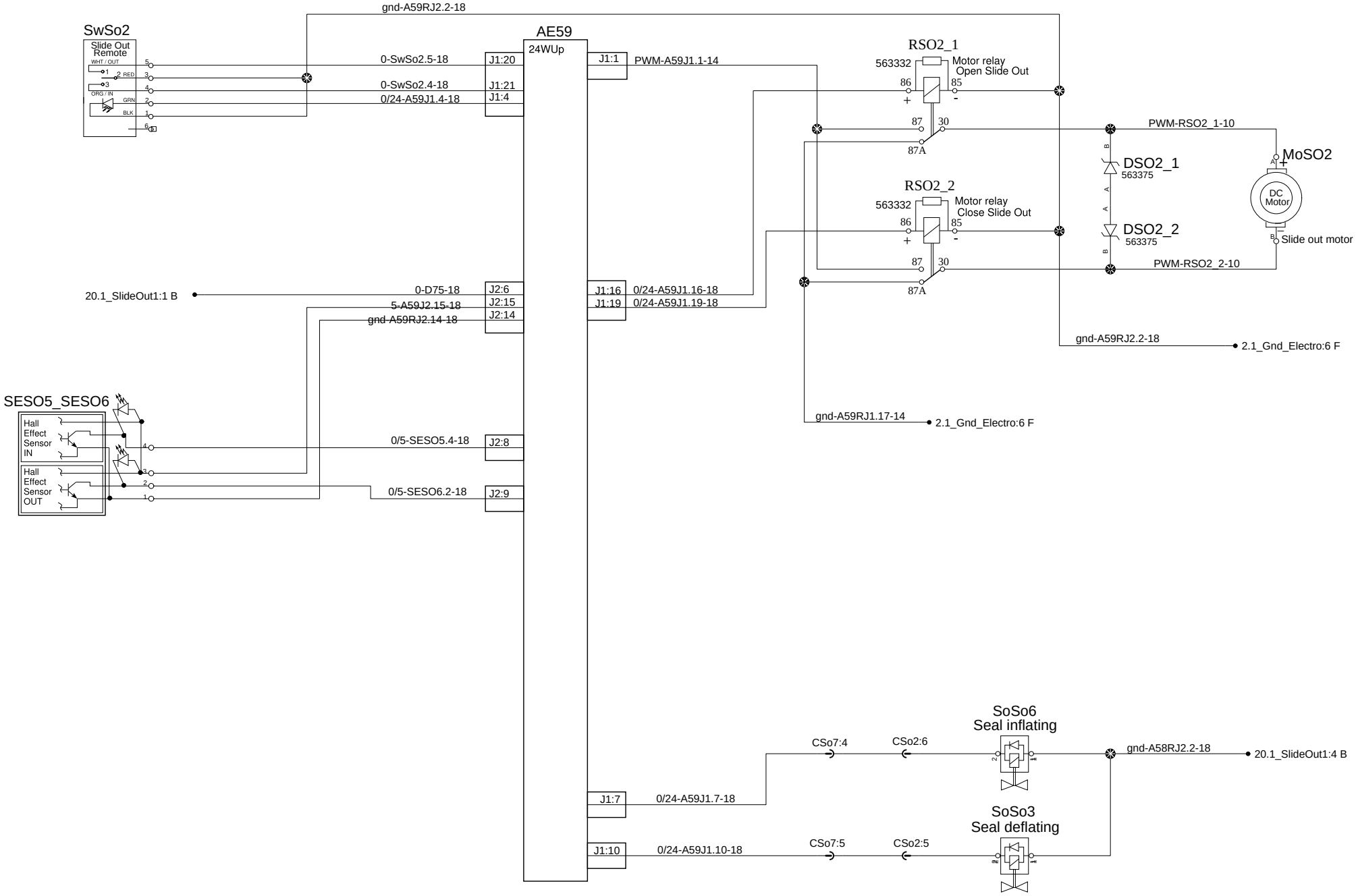

PREVOST®	WIRING DIAGRAM	No:D061670	Page:20.2	Rev:18

FRONT JUNCTION BOX

CInt1 (BLACK)

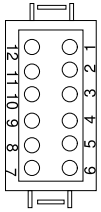

BACK OF CONNECTOR
PREVOST PART 563227
SOCKET TERMINALS 562482
SECONDARY LOCK 563228

INPUTS

Retract slide out	CInt1:1	0-CInt1-18	J2:2
Store roof antenna	CInt1:2	0-CInt2-18	J2:3
Close front bumper	CInt1:3	0-CInt3-18	J2:4
Store side awning	CInt1:4	0-CInt4-18	J2:5
Generator problem	CInt1:5	0-CInt5-18	J2:9
Shore power cord	CInt1:6	0-CInt6-18	J2:10
House alternator fault	CInt1:7	0-CInt7-18	J2:12
Awning windows opened	CInt1:8	0-CInt8-18	J2:13

*** ELECTRONIC GND INPUT *** — CInt1:9

2.1_Gnd_Electro:0 D — gnd-00F4-18

OUTPUT

AE41 (24VD I/O_EA)

J1:10	24-CC17-18	CInt2:1	PARK BRAKE
J1:13	24-CC16-18	CInt2:2	NEUTRAL

2.1_Gnd_Electro:3 C — gnd-A41RJ2.14-18 — CInt2:3 — *** ELECTRONIC GND RETURN ***

AE42 (24WUP I/O_EA)

J1:3	24-A42J1.3-18	CInt2:4	IGNITION
J1:4	24-A42J1.4-18	CInt2:5	ENGINE RUN
J1:7	24-A42J1.7-18	CInt2:6	SLIDE OUT REAR LEFT IN
J1:13	24-A42J1.13-18	CInt2:7	WAKE UP IGNITION
J1:16	24-A42J1.16-18	CInt2:8	SLIDE OUT FRONT LEFT IN
J2:15	24-A42J2.15-18	CInt2:9	REVERSE GEAR

2.1_Gnd_Electro:4 C — gnd-A42J1.18-16 — CInt2:10 — *** ELECTRONIC GND RETURN ***

15.1_Trans_Allison:4 A — 12-A1.25-18 — CInt2:11 — TRANSMISSION SPEED

CInt2 (GREY)

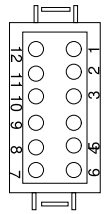

BACK OF CONNECTOR
PREVOST PART 563226
SOCKET TERMINALS 562482
SECONDARY LOCK 563228

TYPICAL CIRCUIT I/OEA

INPUT SPECIFICATION

Active state (input contact closed):

Sourcing current : 8mA
Maximum allowed voltage drop across contact: 3V

Inactive state(input contact open):

Voltage on input:12V
Maximum allowed leakage current across contact: 3ma

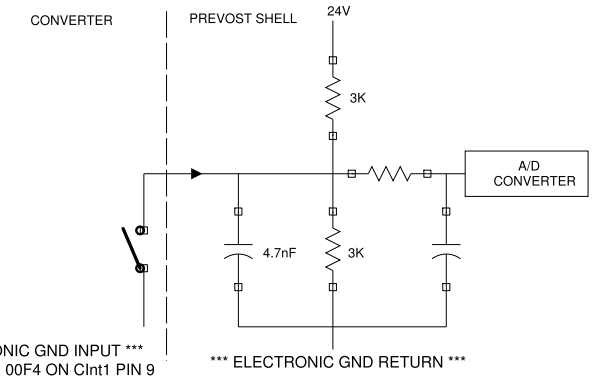

OUTPUT SPECIFICATION

Active state

Maximum current: 1A I/OA /125ma MECM
Minimum output voltage: 22.5V

Inactive state

Open circuit voltage: 6v to 8v
Leakage current: 0.8ma

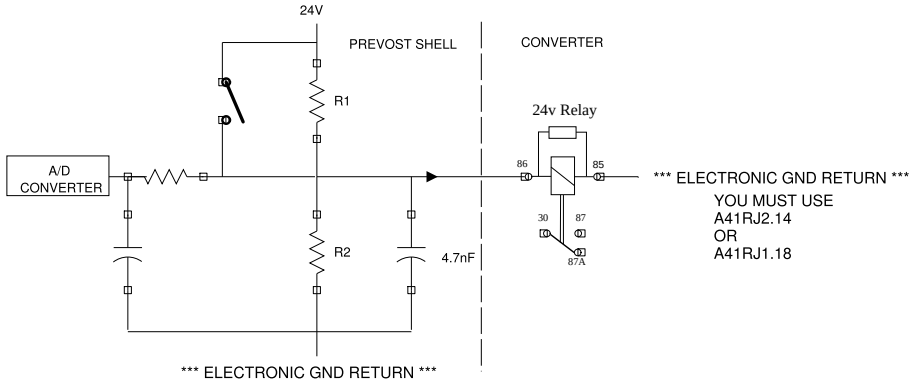

CONVERTER INTERFACE

CInt1 (BLACK)

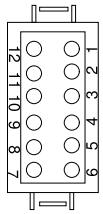

BACK OF CONNECTOR
PREVOST PART 563227
SOCKET TERMINALS 562482
SECONDARY LOCK 563228

INPUTS

Retract slide out	CInt1:1	0-CInt1-18	J2:2
Store roof antenna	CInt1:2	0-CInt2-18	J2:3
Close front bumper	CInt1:3	0-CInt3-18	J2:4
Store side awning	CInt1:4	0-CInt4-18	J2:5
Generator problem	CInt1:5	0-CInt5-18	J2:9
Shore power cord	CInt1:6	0-CInt6-18	J2:10
House alternator fault	CInt1:7	0-CInt7-18	J2:12
Awning windows opened	CInt1:8	0-CInt8-18	J2:13
*** ELECTRONIC GND INPUT ***	CInt1:9		
2.1_Gnd_Electro:0 D	gnd-00F4-18		

OUTPUT

AE41 24VD I/O_EA

J1:10	24-CC17-18	CInt2:1	PARK BRAKE
J1:13	24-CC16-18	CInt2:2	NEUTRAL
2.1_Gnd_Electro:3 C	gnd-A41RJ2.14-18	CInt2:3	*** ELECTRONIC GND RETURN ***

AE42 24WUP I/O_EA

J1:3	24-A42J1.3-18	CInt2:4	IGNITION
J1:4	24-A42J1.4-18	CInt2:5	ENGINE RUN
J1:7	24-A42J1.7-18	CInt2:6	SLIDE OUT REAR LEFT IN
J1:16	24-A42J1.16-18	CInt2:8	SLIDE OUT FRONT LEFT IN
J2:15	24-A42J2.15-18	CInt2:9	REVERSE GEAR
2.1_Gnd_Electro:4 C	gnd-A42J1.18-16	CInt2:10	*** ELECTRONIC GND RETURN ***
15.1_Trans_Allison:4 A	12-A1.25-18	CInt2:11	TRANSMISSION SPEED

A36 24VD MCM

JA:16	24-A36JA.16-18	CInt2:7	WAKE UP IGNITION

CInt2 (GREY)

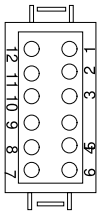

BACK OF CONNECTOR
PREVOST PART 563226
SOCKET TERMINALS 562482
SECONDARY LOCK 563228

TYPICAL CIRCUIT I/OEA

INPUT SPECIFICATION

Active state (input contact closed):

Sourcing current : 8mA
Maximum allowed voltage drop across contact: 3V

Inactive state(input contact open):

Voltage on input:12V
Maximum allowed leakage current across contact: 3ma

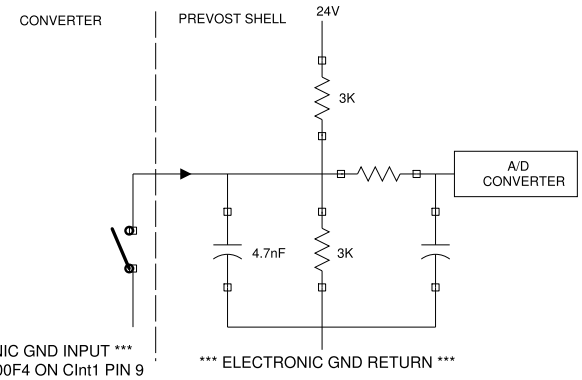

OUTPUT SPECIFICATION

Active state

Maximum current: 1A I/OA /125ma MECM
Minimum output voltage: 22.5V

Inactive state

Open circuit voltage: 6v to 8v
Leakage current: 0.8ma

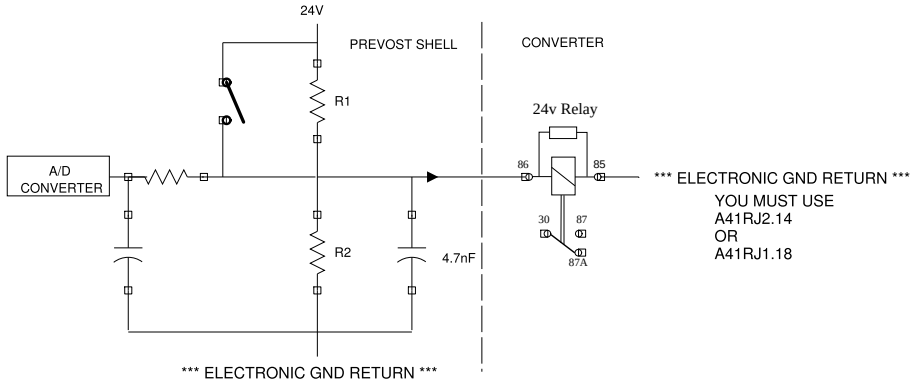

Brake, Engine brake and Retarder

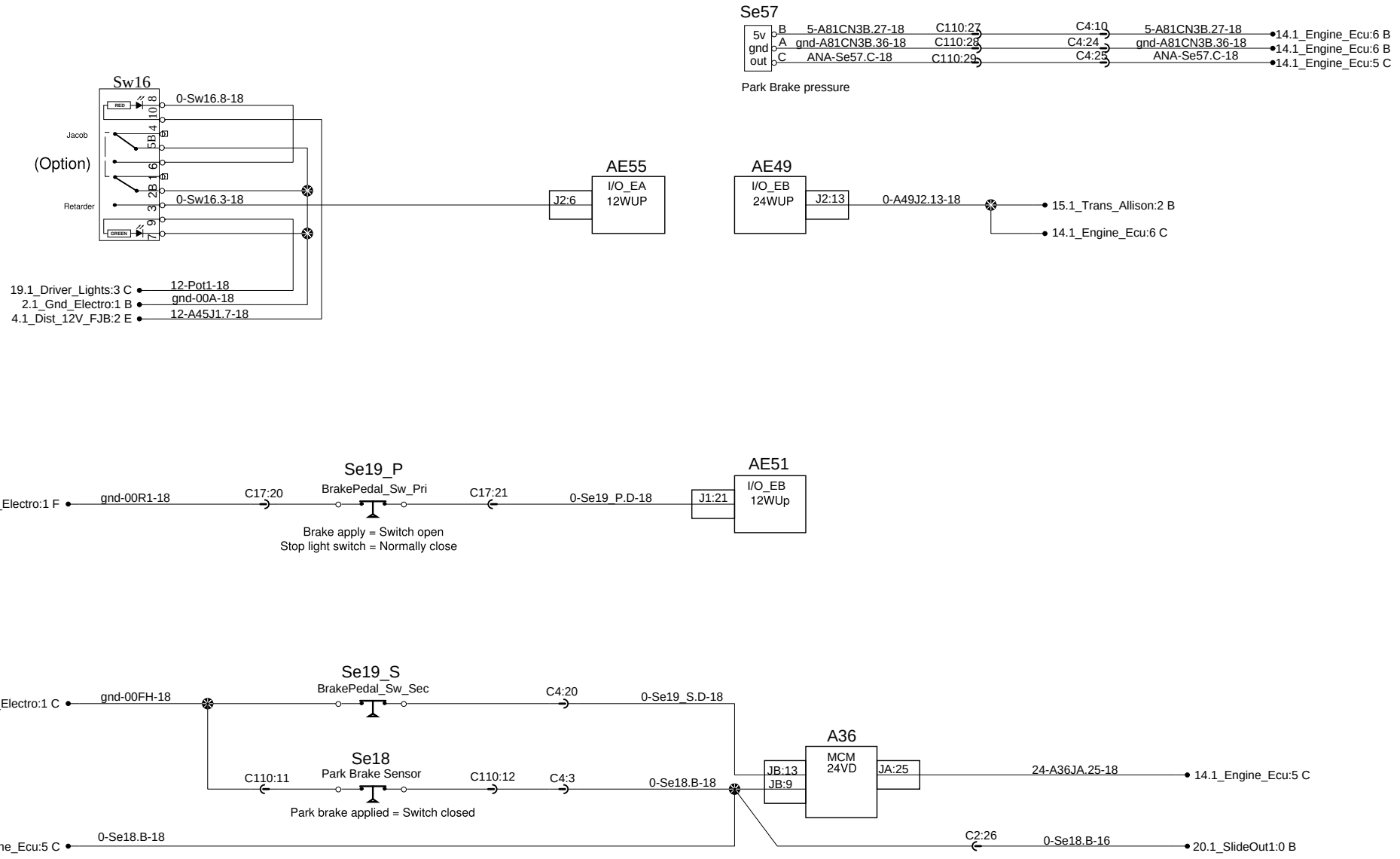

Engine and RJB lighting

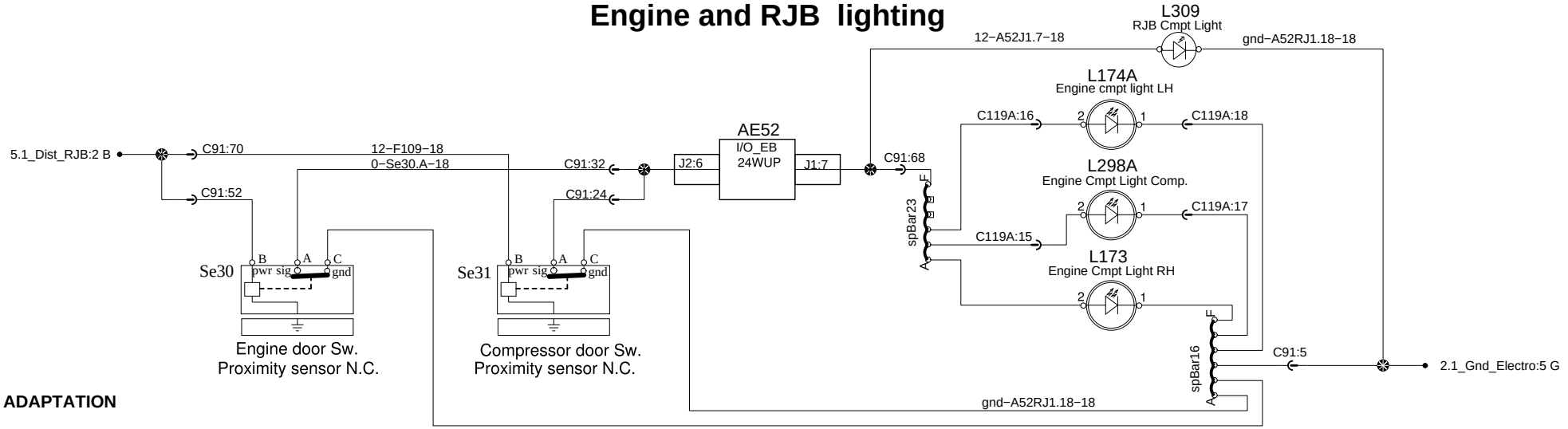

CUSTOMER ADAPTATION

Luggages compartment lighting

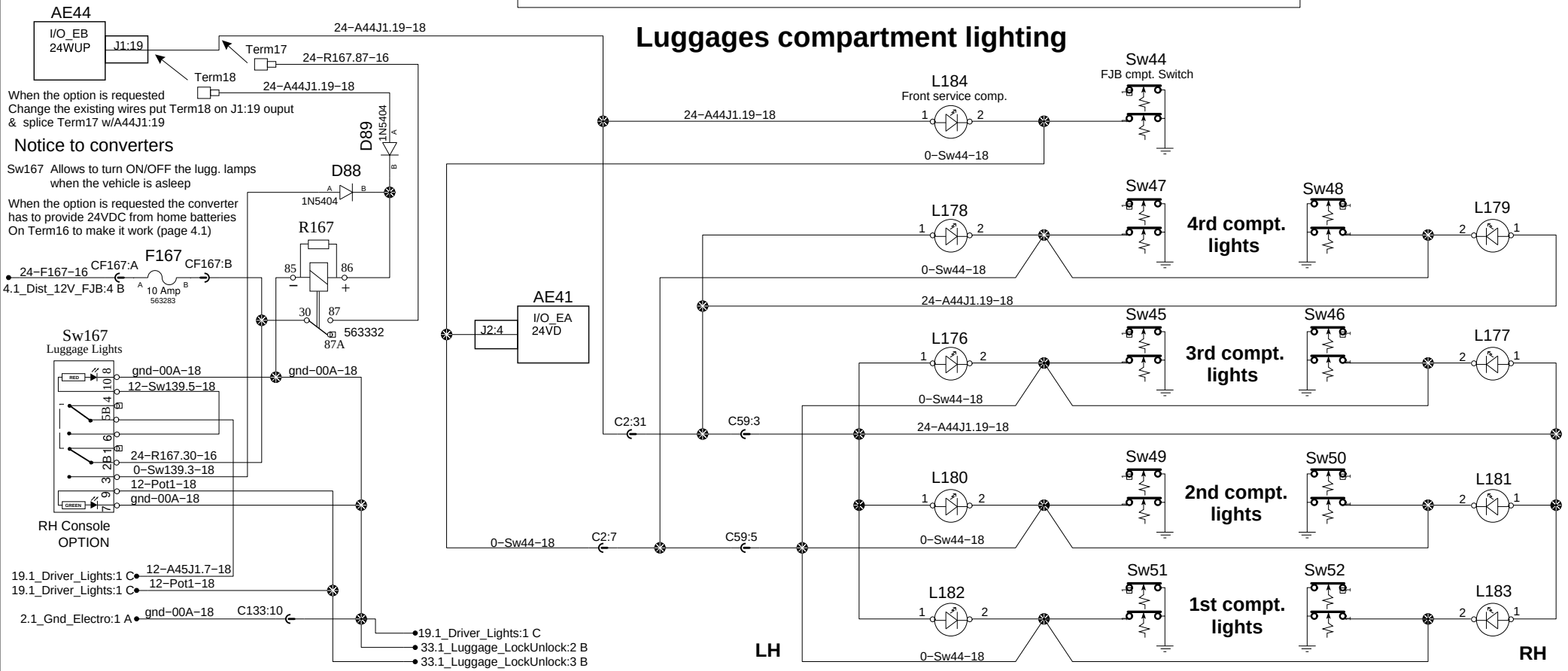

Engine and RJB lighting

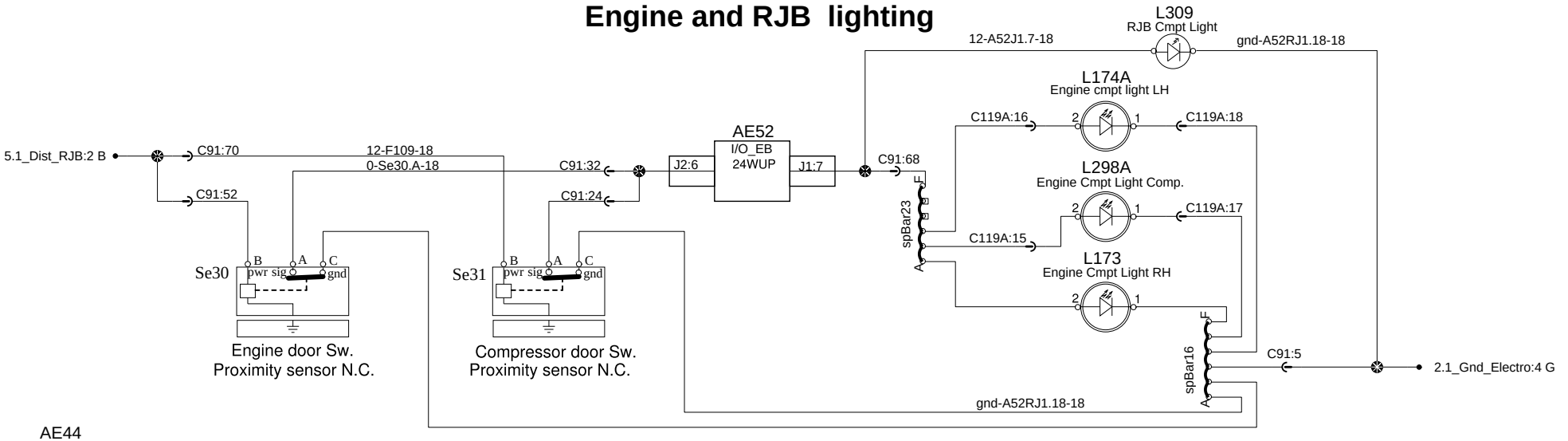

Luggages compartment lighting

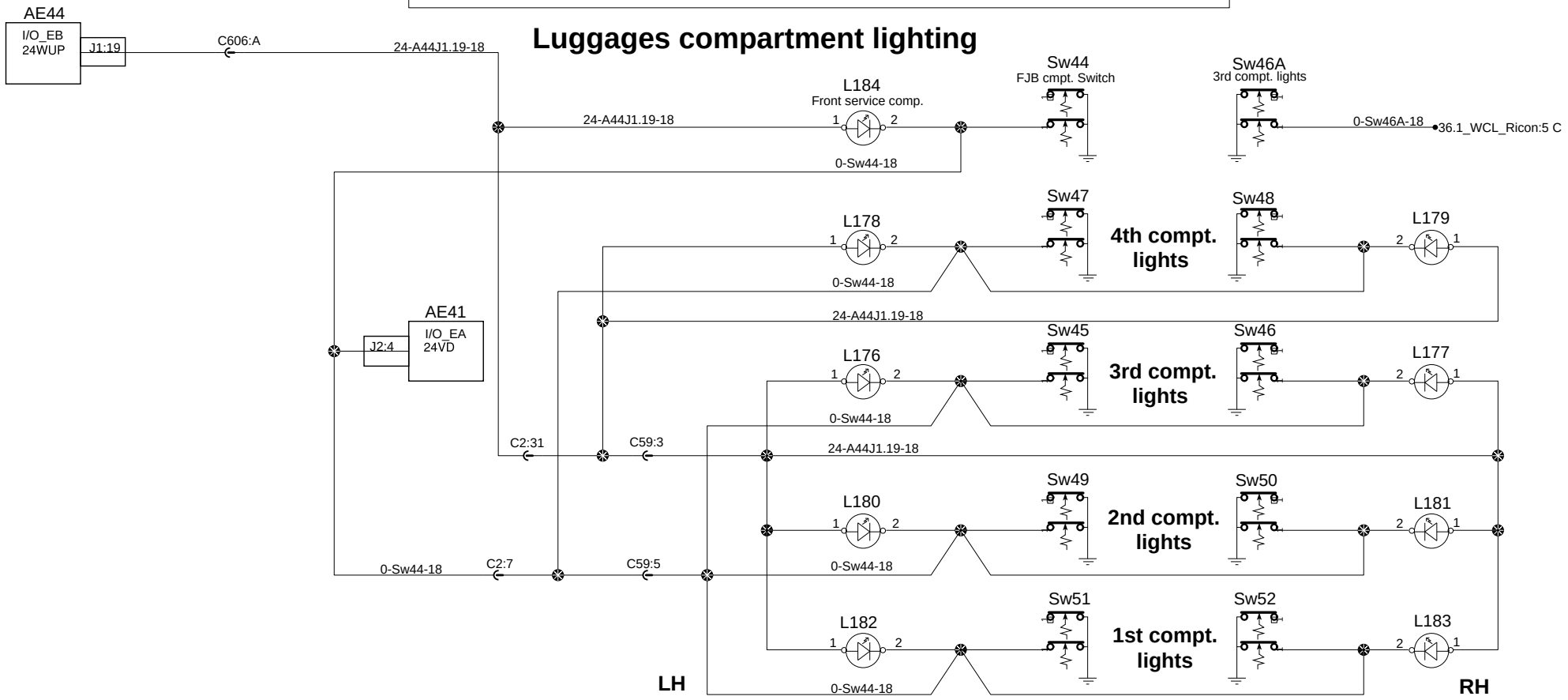

Engine and RJB lighting

Customer Adaptation of luggages compartment lighting

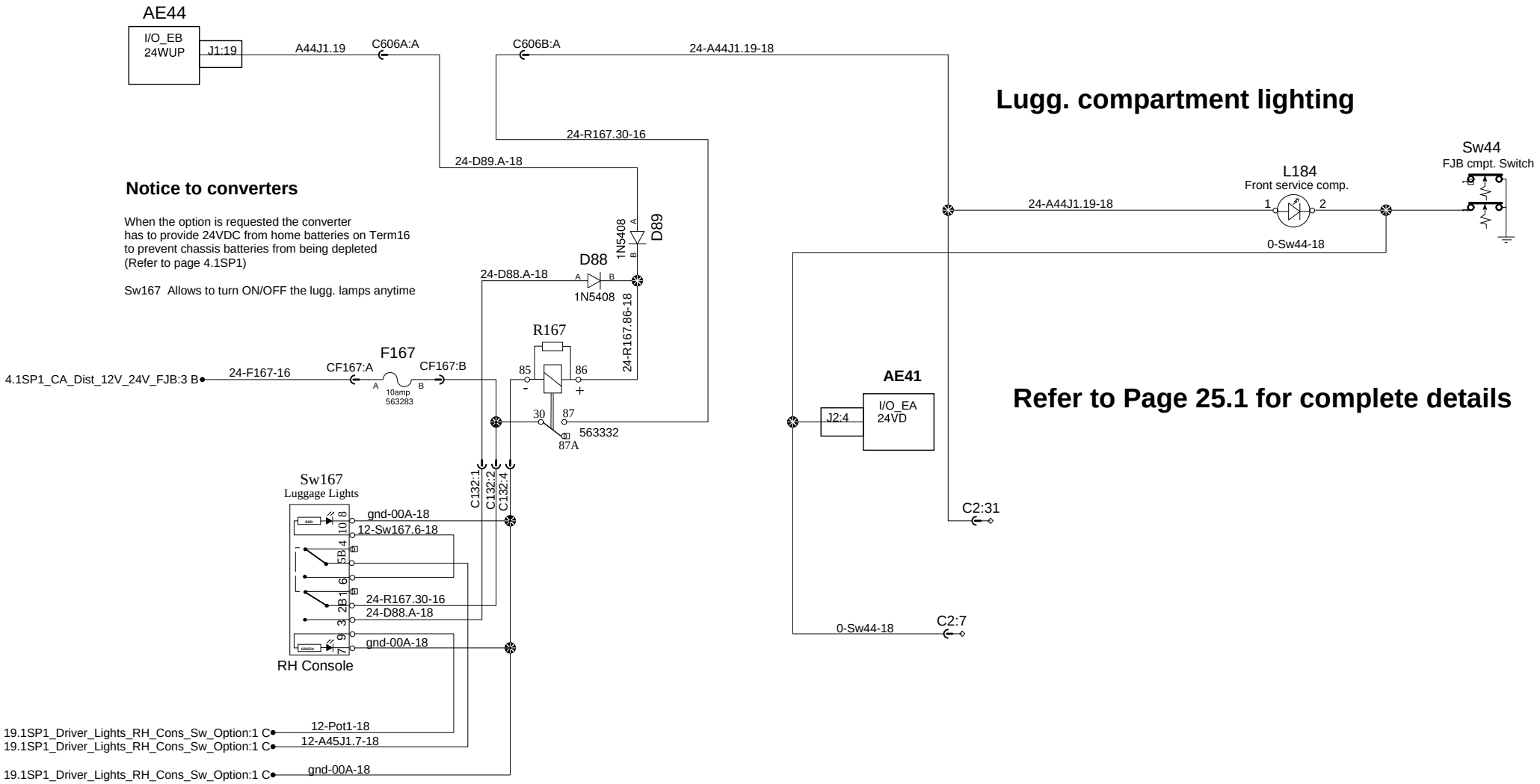

Engine and RJB lighting

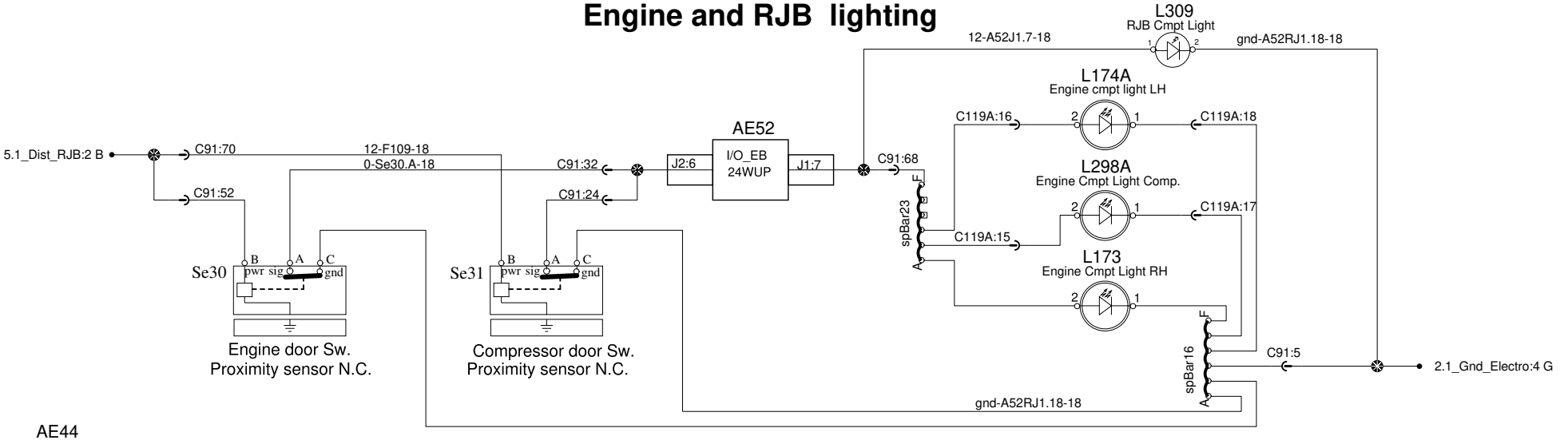

Luggages compartment lighting

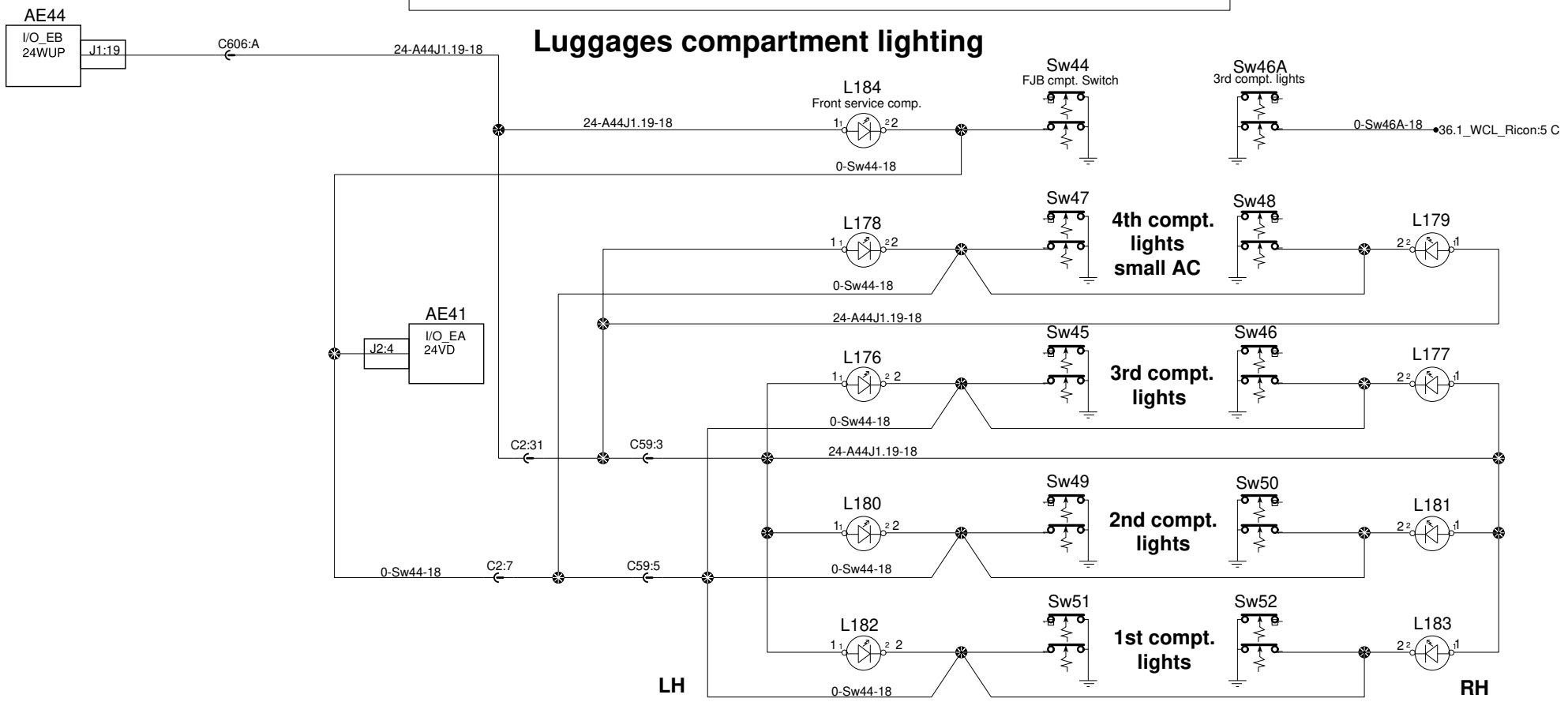

Front flashers, Markers, Clearance and Head lights

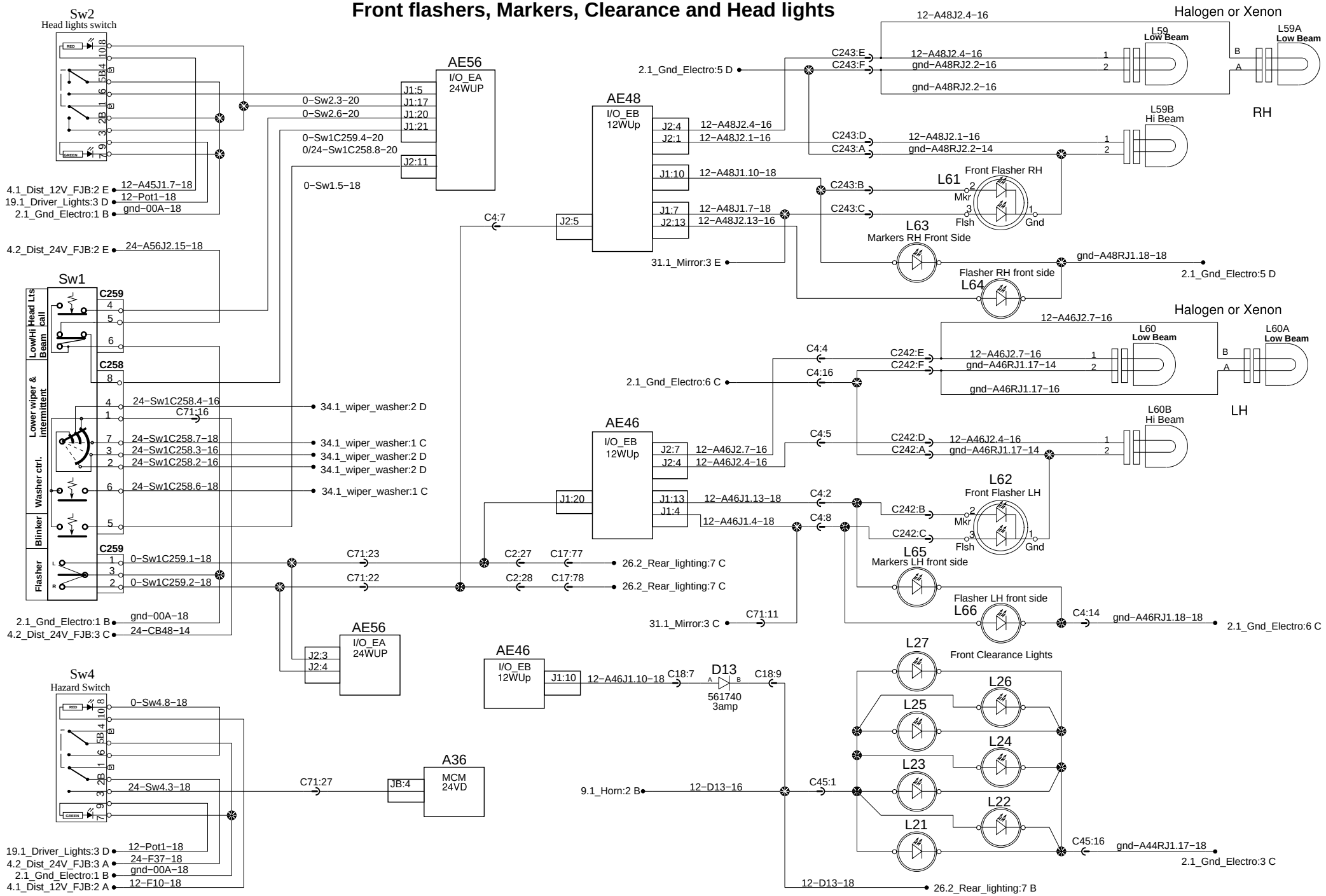

PREVOST®	WIRING DIAGRAM	No:D061670	Page:26.1	Rev:1

Front flashers, Markers, Clearance and Head lights

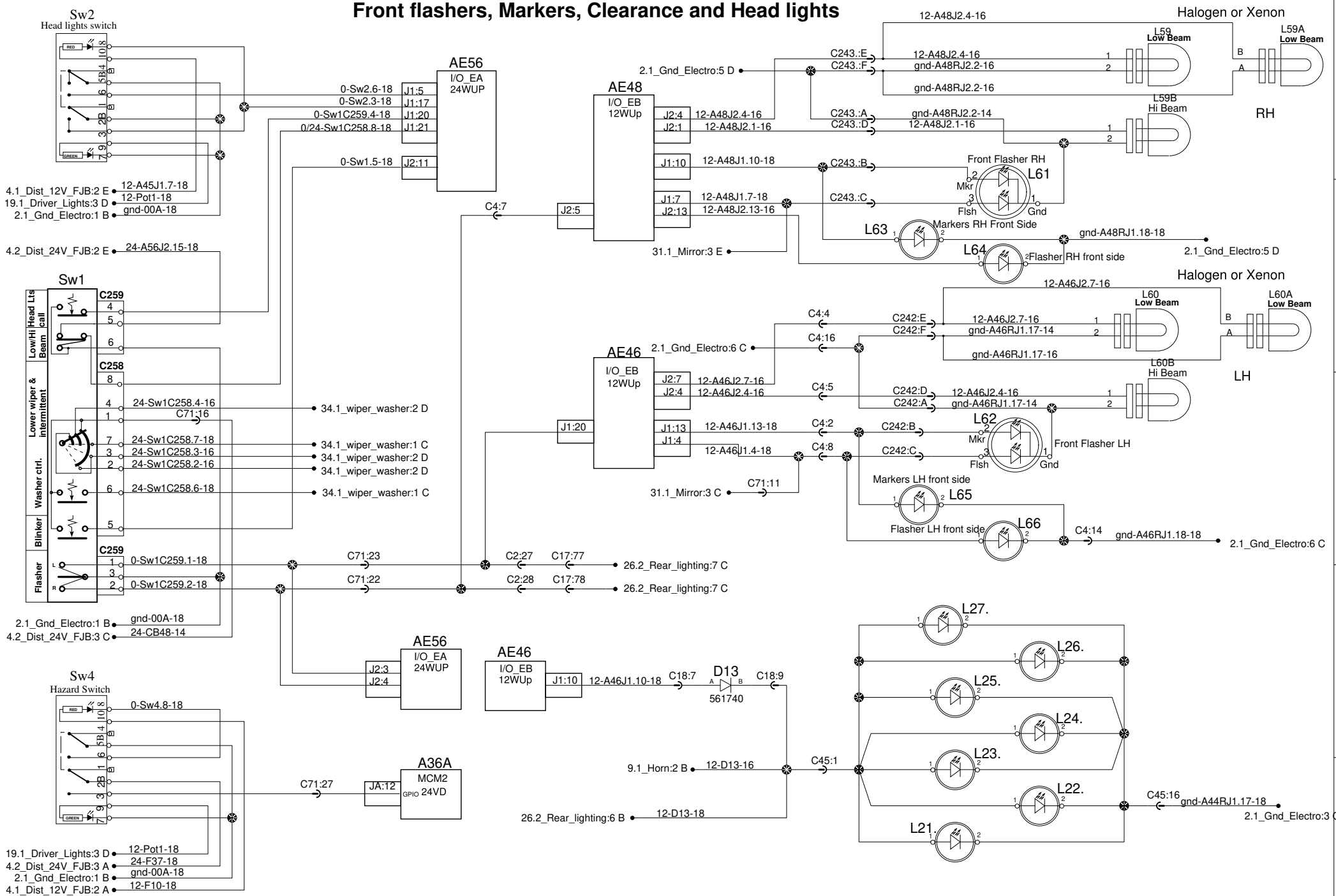

Rear flashers, Markers, Tail and stop lights

AE50
I/O_EB
12WUP
J2:7 12−A50J2.7−18
J2:1 12−A50J2.1−18
J1:19 12−A50J1.19−18
J1:13 12−A50J1.13−18
J1:10

AE51
I/O_EB
12WUp
J1:20 0−Sw1C259.1−18 / 26.1_Front_Lighting:2 D
J2:5 0−Sw1C259.2−18 / 26.1_Front_Lighting:2 D
J1:4 12−A51J1.4−18
J1:7 12−A51J1.7−18
J1:10 12−A51J1.10−18
J1:13 12−A51J1.13−18
J2:7 12/0−A51J2.7−18
J2:1 12−A51J2.1−18
J2:10 12−A51J2.10−18

26.4_Trailer:1 C 12−A50J1.19−18
26.4_Trailer:1 B 12−A50J1.13−18
26.4_Trailer:1 D 12−A51J1.10−18
26.4_Trailer:1 C 12−A51J1.7−18

C91:9 C91:47

spBar13 A F
spBar22 A F

12−A50J2.7−18 C17:79 C158:1 Marker center RH L67 C158:3 C17:82 gnd−A50RJ1.17−18 2.1_Gnd_Electro:5 G
12−A50J1.19−18 C17:80 C158:2 Flasher center RH L68 Marker center LH L69 C52:2 C52:7 C59:24
12−A50J1.13−18 C17:81 C52:1 Flasher center LH L70

L307 Optional Flasher LH C304:1 C304:2
12−A50J1.13−18 C59:23
L304 Optional marker LH C304:3 C304:4
12−A50J2.7−18 C59:21
L306 Optional Flasher RH C305:1 C305:2
12−A50J1.19−18 C59:22
L305 Optional marker RH C305:3 C305:4

12−A50J1.13−18 C91:4 Rr side Flasher LH L75 spBar15 A F C91:11
12−A50J1.19−18 C91:6 Rr side Flasher RH L76
12−A51J1.10−18 Rr side Markers LH L72
12−A51J1.10−18 Rr side Markers RH L74

12−A51J1.4−18 C91:41 C119A:1 C122:A L73A Rr Flasher RH gnd−A51RJ1.17−18 / 26.3_Backup_Warnings:3 C
12−A50J2.1−18 C91:25 C119A:9 C122:C L77A Lower Stop Light RH
12/0−A51J2.7−18 C119A:2 C122:B L78A Upper Stop Light RH C122:E C119A:5 spBar24 A F
12−A51J1.10−18 C119A:11 L82A License Light RH spBar11 A F C119A:13 C91:50 gnd−A51RJ1.17−18 / 2.1_Gnd_Electro:4 G
12−A51J1.13−18 C91:43 C119A:4 C121:A L71A Rr Flasher LH
12−A50J2.1−18 C91:26 C119A:10 C121:C L79A Lower Stop Light LH gnd−A51RJ1.17−18 / 26.3_Backup_Warnings:3 B
12/0−A51J2.7−18 C119A:3 C121:B L80A Upper Stop Light LH C121:E C119A:6 spBar12 A F
12−A51J1.10−18 C119A:12 L83A License Light LH C119A:14

12−A51J1.7−18 C91:13 C12:3 L81 Cyclope Center C12:5 spBar14 A F
12−A51J2.1−18 C91:65 C12:6 L285 Upper Rear cyclope RH C12:1 C91:21 gnd−A50RJ1.18−18 / 2.1_Gnd_Electro:5 G
12−A51J2.10−18 C91:63 C12:2 L286 Upper Rear cyclope LH C12:4

26.1_Front_Lighting:3 E 12−D13−18 C2A:31 C17:83 12−D13−18 C91:18 C10:2
26.4_Trailer:1 B 12−D13−18

L84 Rear Clearance Lights
L85 Rear Clearance Lights C10:3
L86 Rear Clearance Lights
L87 Rear Clearance Lights
L88 Rear Clearance Lights
L89 Rear Clearance Lights C87:2 C91:10
L90 Rear Clearance Lights

C91:8 C87:1

Rev:7
Page:26.2
No:D061670
WIRING DIAGRAM
PREVOST®

Rear flashers, Markers, Tail and stop lights

AE50
I/O_EB
12WUP
J2:7 12−A50J2.7−18
J2:1 12−A50J2.1−18
J1:19 12−A50J1.19−18
J1:13 12−A50J1.13−18
J1:10

AE51
I/O_EB
12WUp
J1:20 0−Sw1C259.1−18 / 26.1_Front_Lighting:2 D
J2:5 0−Sw1C259.2−18 / 26.1_Front_Lighting:2 D
J1:4 12−A51J1.4−18
J1:7 12−A51J1.7−18
J1:10 12−A51J1.10−18
J1:13 12−A51J1.13−18
J2:7 12/0−A51J2.7−18
J2:1 12−A51J2.1−18
J2:10 12−A51J2.10−18

26.4_Trailer:1 C 12−A50J1.19−18
26.4_Trailer:1 C 12−A50J1.13−18
26.4_Trailer:1 B 12−A51J1.7−18

C91:9 C91:47

spBar13 A B F
spBar22 A B F

12−A50J2.7−18 C17:79 C158:1 Marker center RH L67 C158:3 C17:82 gnd−A50RJ1.17−18 2.1_Gnd_Electro:4 G
12−A50J1.19−18 C17:80 C158:2 Flasher center RH L68 Marker center LH L69 C52:2 C52:7 C59:24
12−A50J1.13−18 C17:81 C52:1 Flasher center LH L70

L307 Optional Flasher LH C304:1 C304:2
L304 Optional marker LH C304:3 C304:4
L306 Optional Flasher RH C305:1 C305:2
L305 Optional marker RH C305:3 C305:4

12−A50J1.13−18 C59:23
12−A50J2.7−18 C59:21
12−A50J1.19−18 C59:22

12−A50J1.13−18 C91:4 Rr side Flasher LH L75 spBar15 A B F C91:11
12−A50J1.19−18 C91:6 Rr side Flasher RH L76
12−A51J1.10−18 Rr side Markers LH L72
12−A51J1.10−18 Rr side Markers RH L74

12−A51J1.4−18 C91:41 C119A:1 C122:A L73A Rr Flasher RH gnd−A51RJ1.17−18 / 26.3_Backup_Warnings:3 C
12−A50J2.1−18 C91:25 C119A:9 C122:C L77A Lower Stop Light RH
12/0−A51J2.7−18 C119A:2 C122:B L78A Upper Stop Light RH C122:E C119A:5 spBar24 A B F C91:50 gnd−A51RJ1.17−18 / 2.1_Gnd_Electro:3 G
12−A51J1.10−18 C119A:11 L82A License Light RH spBar11 A B F C119A:13
12−A51J1.13−18 C91:43 C119A:4 C121:A L71A Rr Flasher LH
12−A50J2.1−18 C91:26 C119A:10 C121:C L79A Lower Stop Light LH gnd−A51RJ1.17−18 / 26.3_Backup_Warnings:3 B
12/0−A51J2.7−18 C119A:3 C121:B L80A Upper Stop Light LH C121:E C119A:6 spBar12 A B F
12−A51J1.10−18 C119A:12 L83A License Light LH C119A:14

12−A51J1.7−18 C91:13 C12:3 L81 Cyclope Center C12:5 spBar14 A B F C91:21 gnd−A50RJ1.18−18 / 2.1_Gnd_Electro:4 G
12−A51J2.1−18 C91:65 C12:6 L285 Upper Rear cyclope RH C12:1
12−A51J2.10−18 C91:63 C12:2 L286 Upper Rear cyclope LH C12:4

26.1_Front_Lighting:3 E 12−D13−18 C2A:31 C17:83 **12−D13−18** C91:18 C10:2
26.4_Trailer:1 D

L84 Rear Clearance Lights
L85 Rear Clearance Lights C10:3
L86 Rear Clearance Lights
L87 Rear Clearance Lights
L88 Rear Clearance Lights
L89 Rear Clearance Lights C87:2 C91:10
L90 Rear Clearance Lights

C91:8 C87:1

Rev:9
Page:26.2
No:D061670
WIRING DIAGRAM
PREVOST®

Rear flashers, Markers, Tail and stop lights

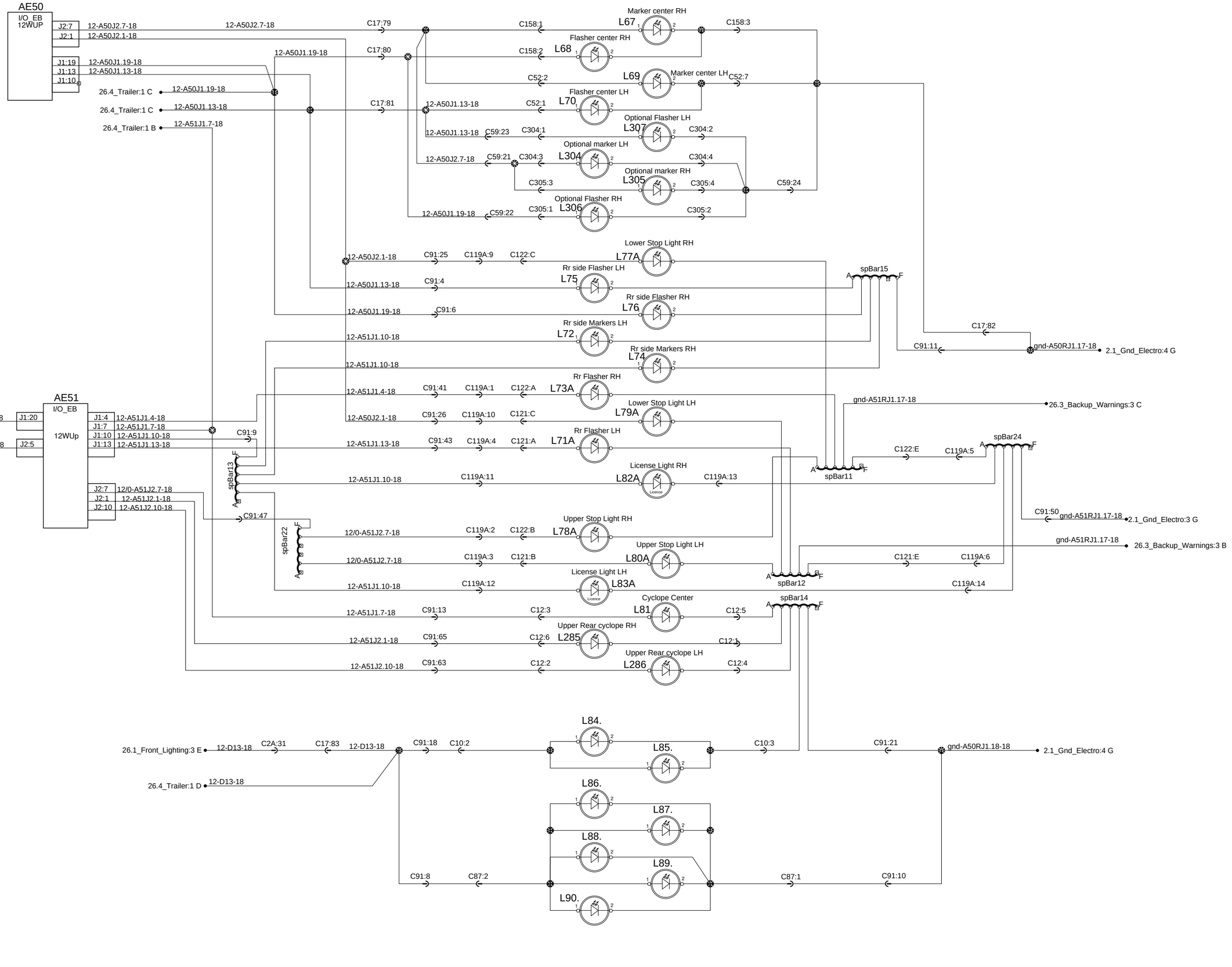

Rev:18

Page:26.2

No:D061670

WIRING DIAGRAM

REVOS®

Backup warnings

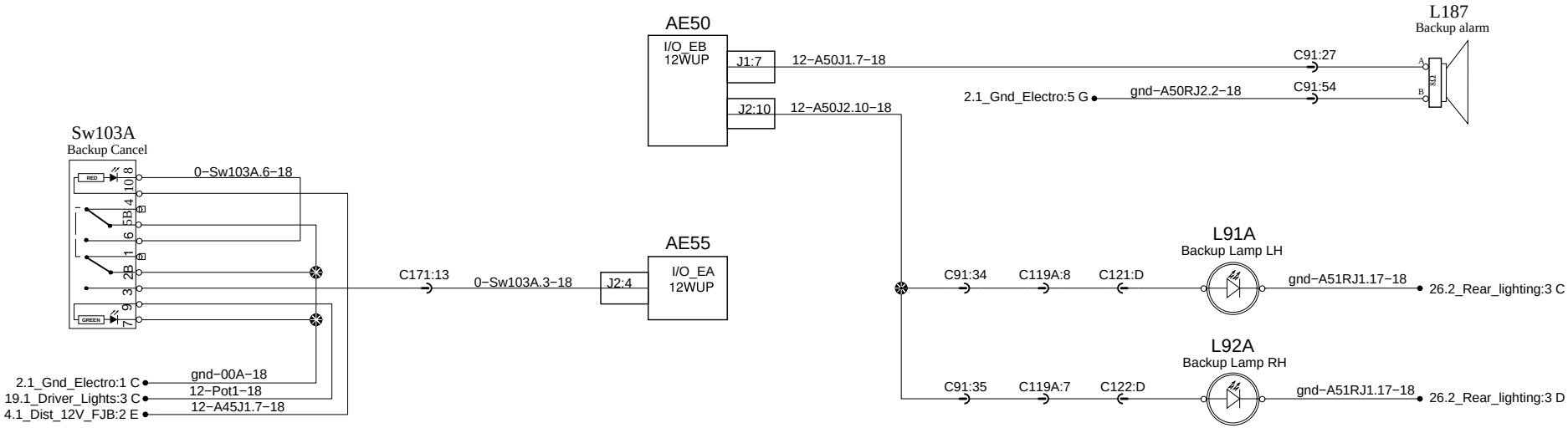

Backup warnings

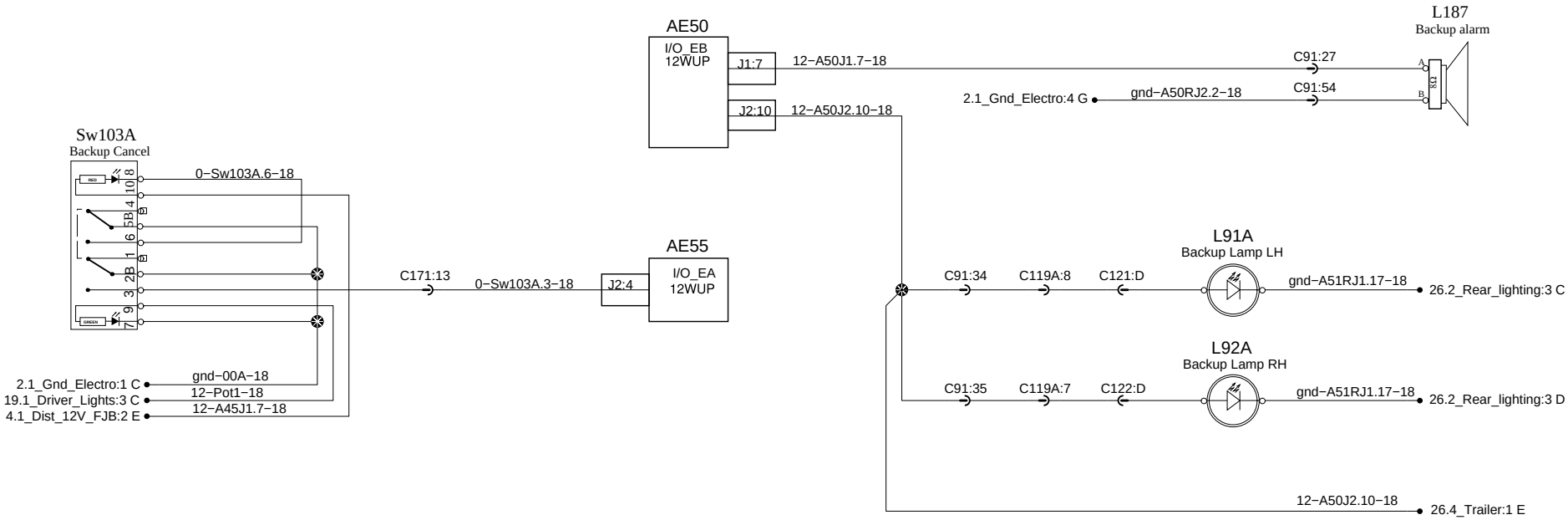

Trailer interface

SAE J560 Standard Trailer socket

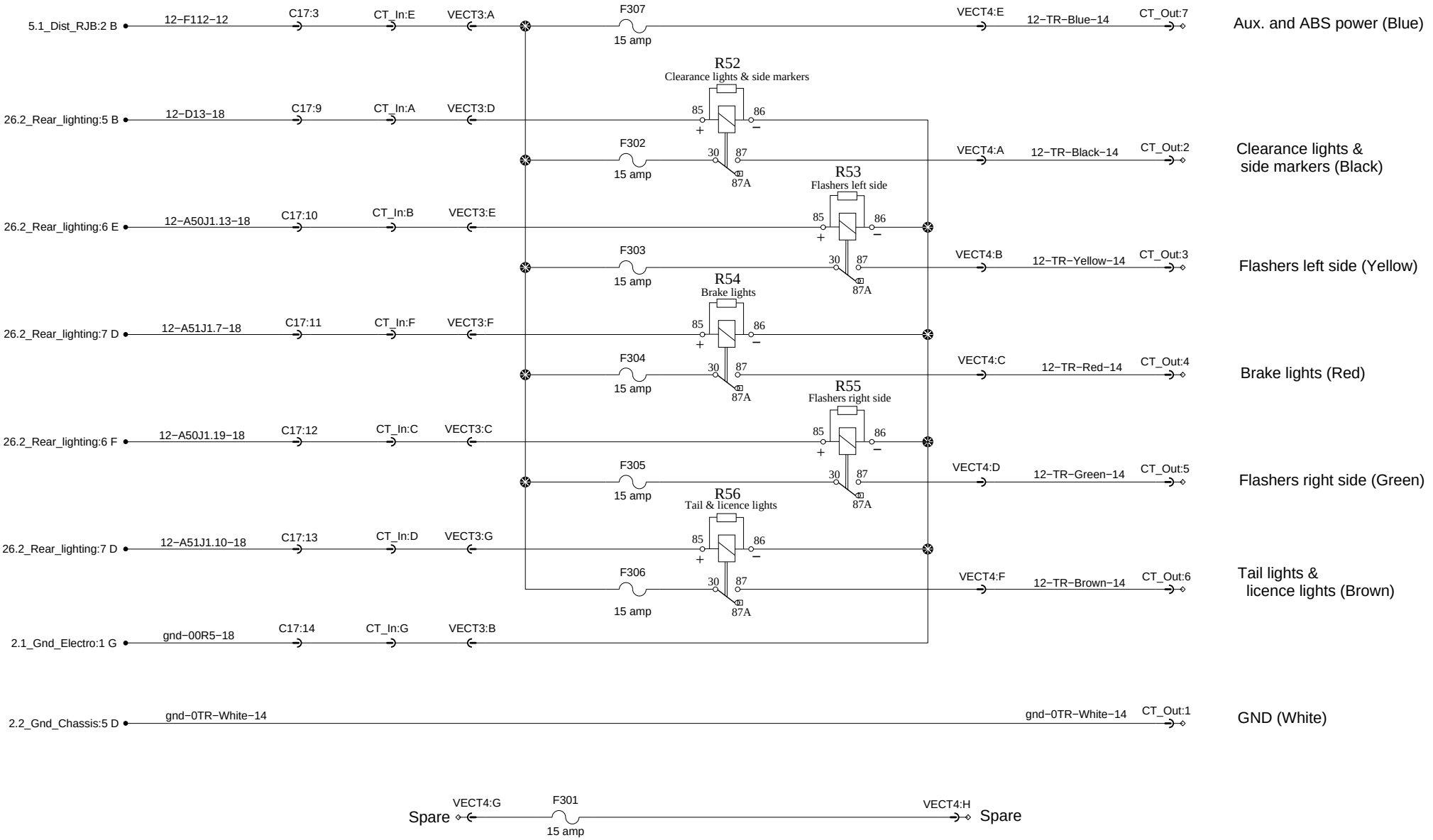

Trailer interface

7−way RV style Trailer connections

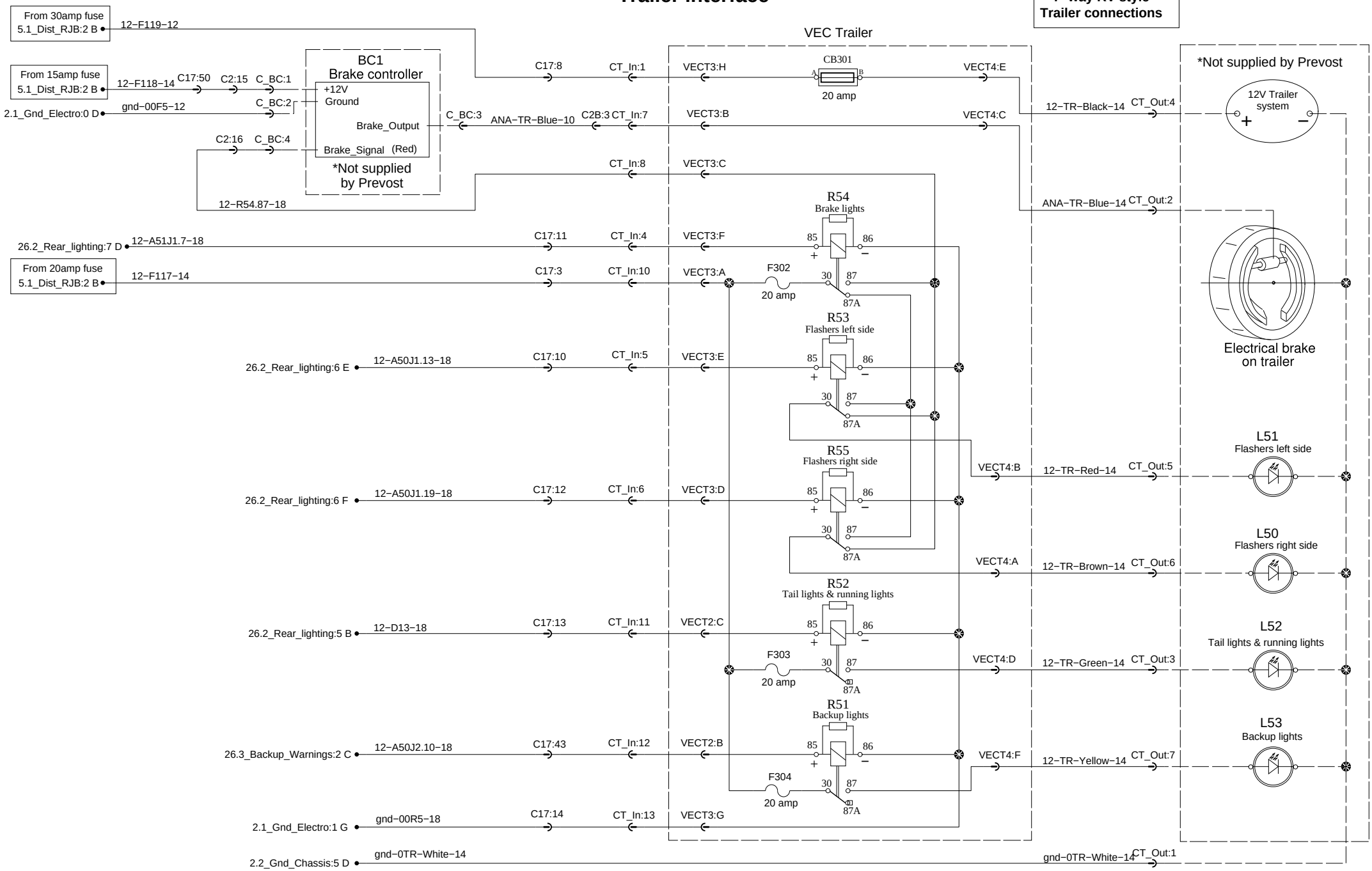

Trailer interface

7-way RV style Trailer connections

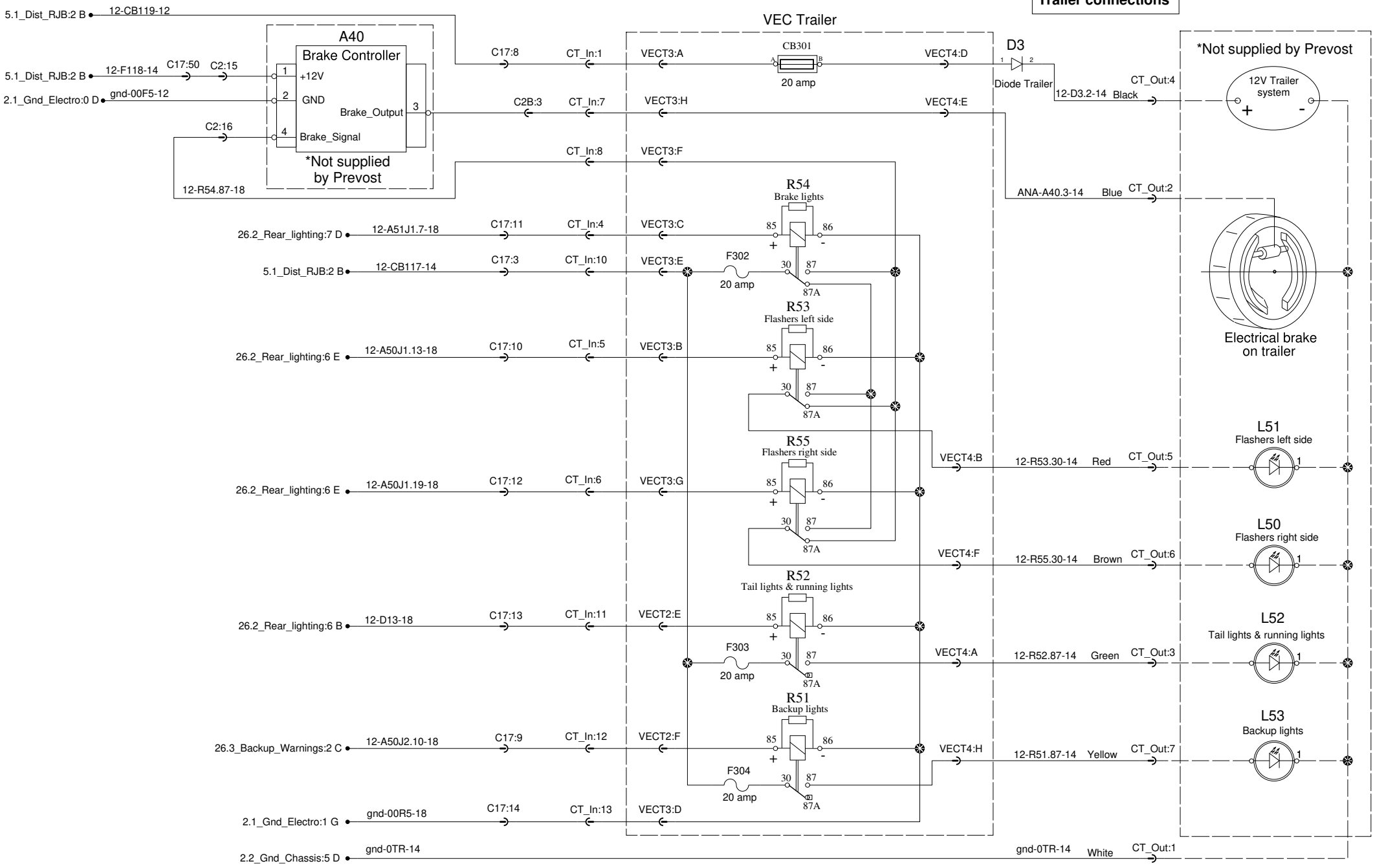

Fog lights , Cornering and Docking lights

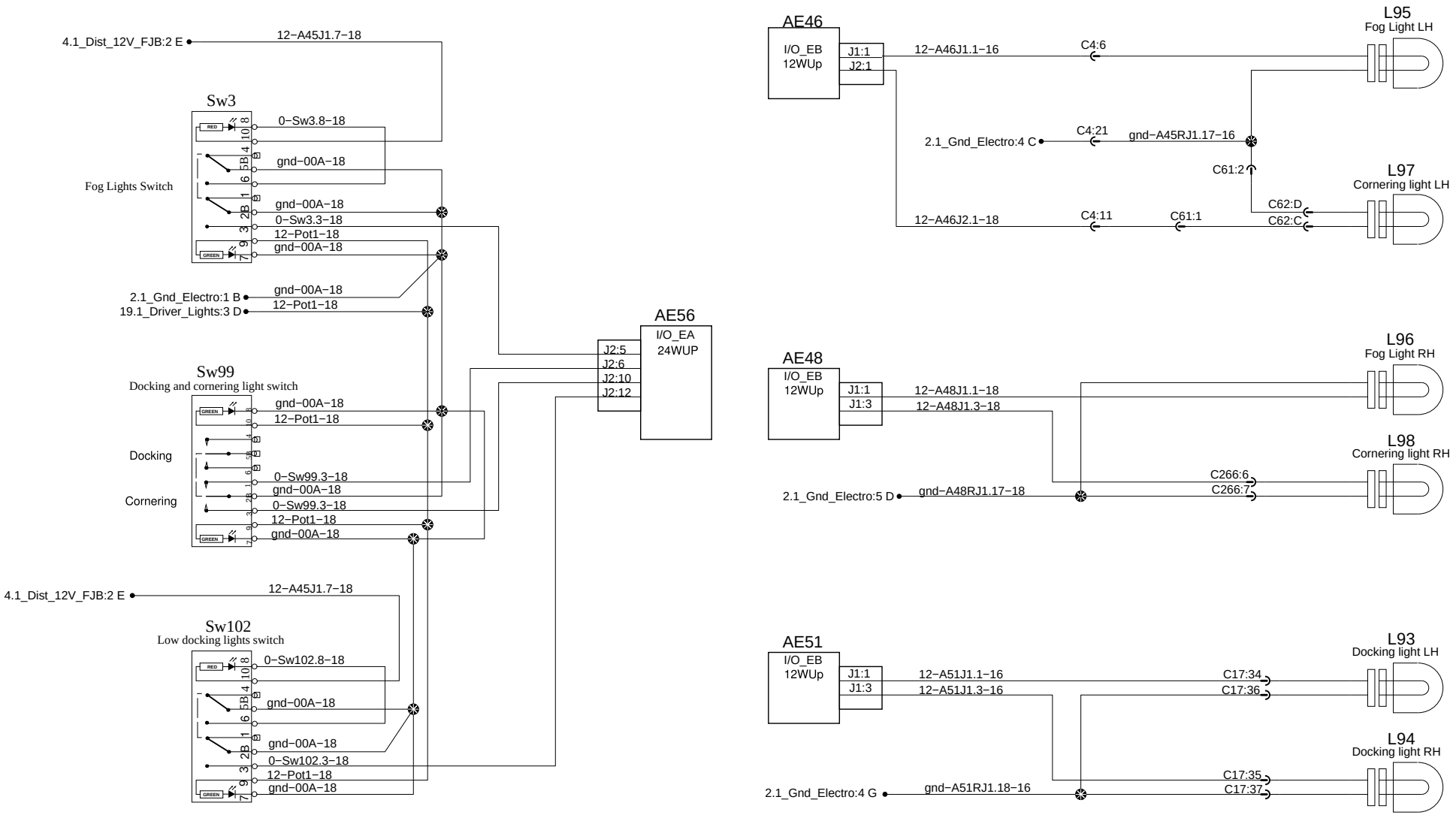

Windows ajar

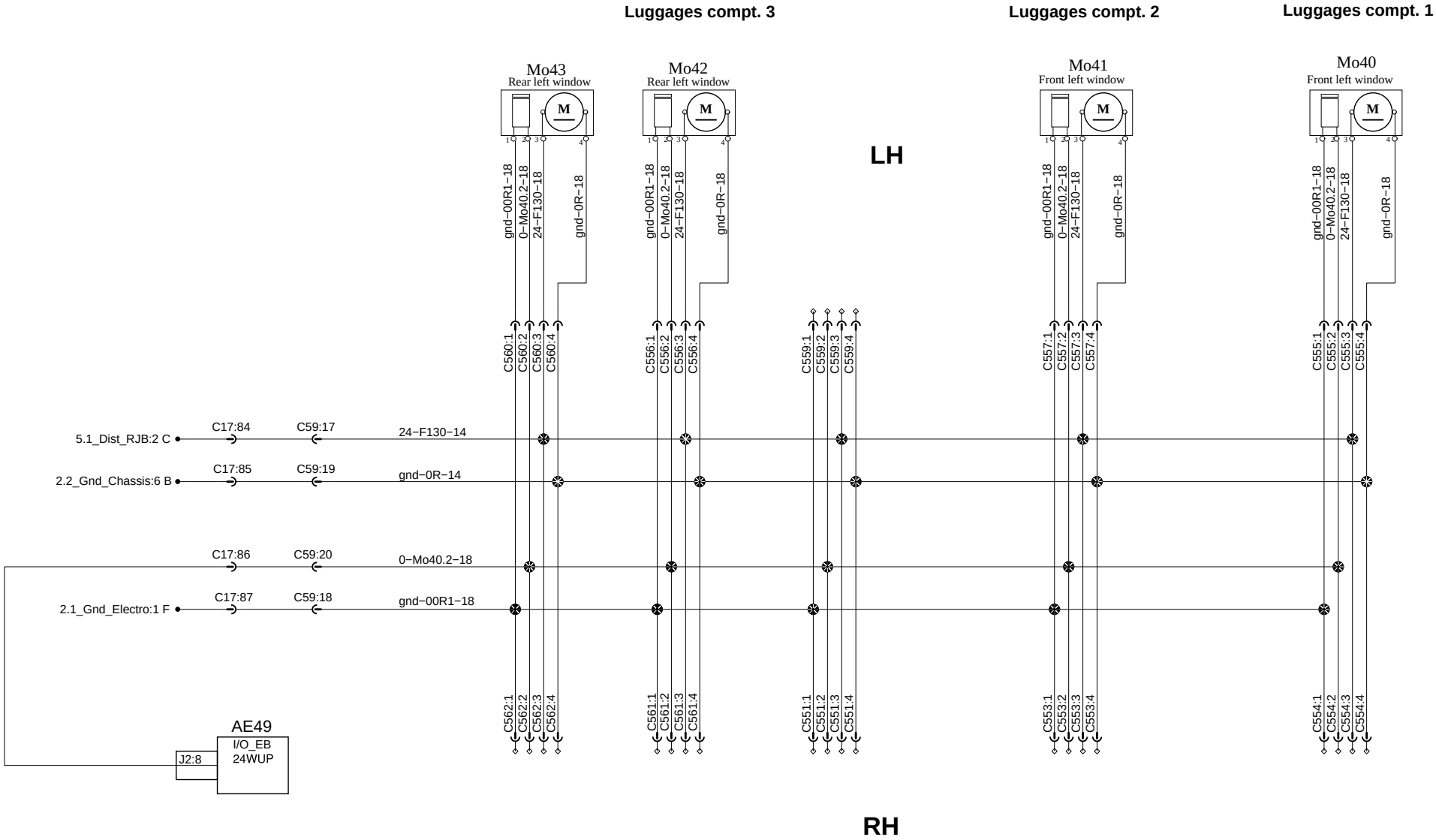

Entrance Door (Keyless Entry System)

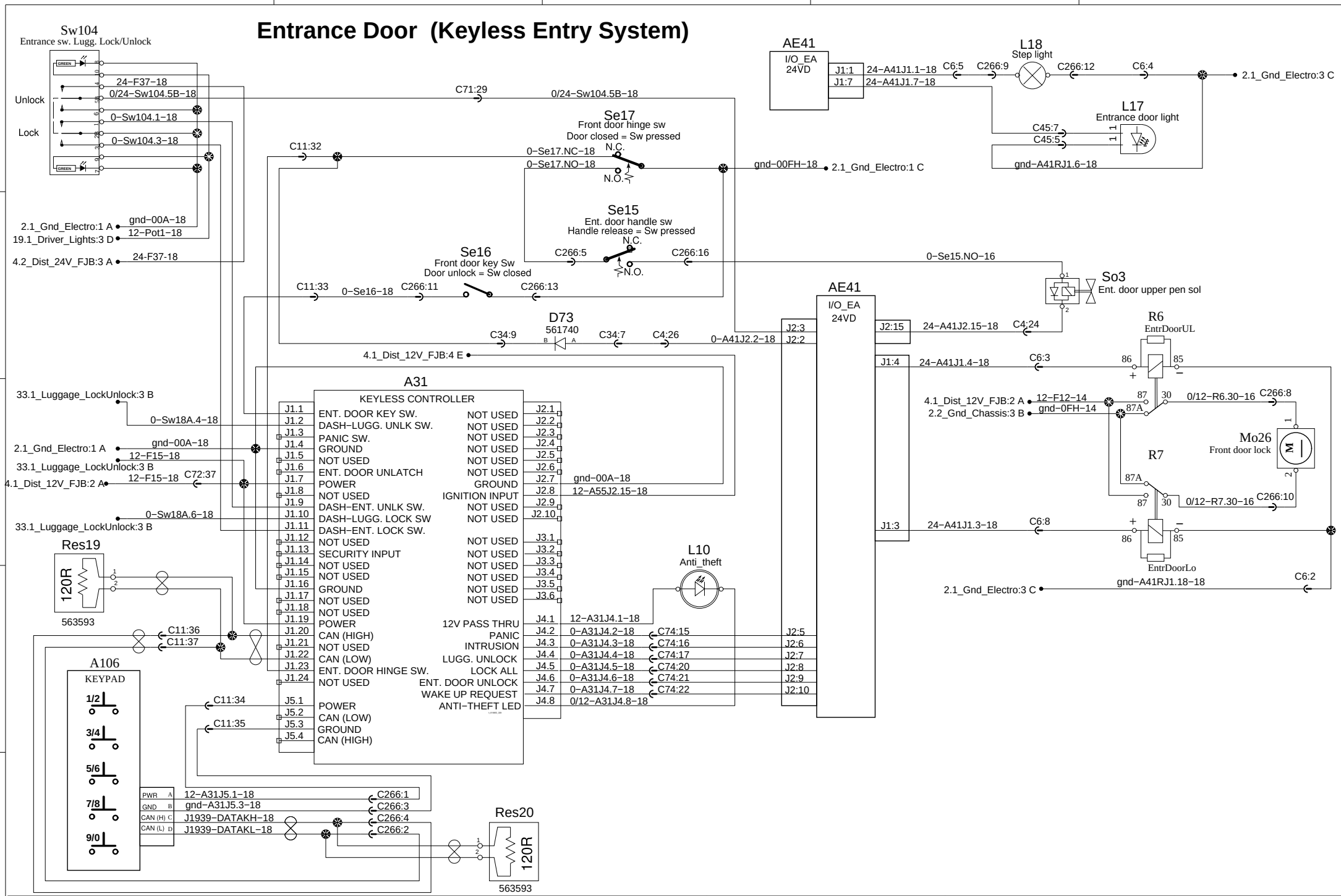

Entrance Door (Keyless Entry System)

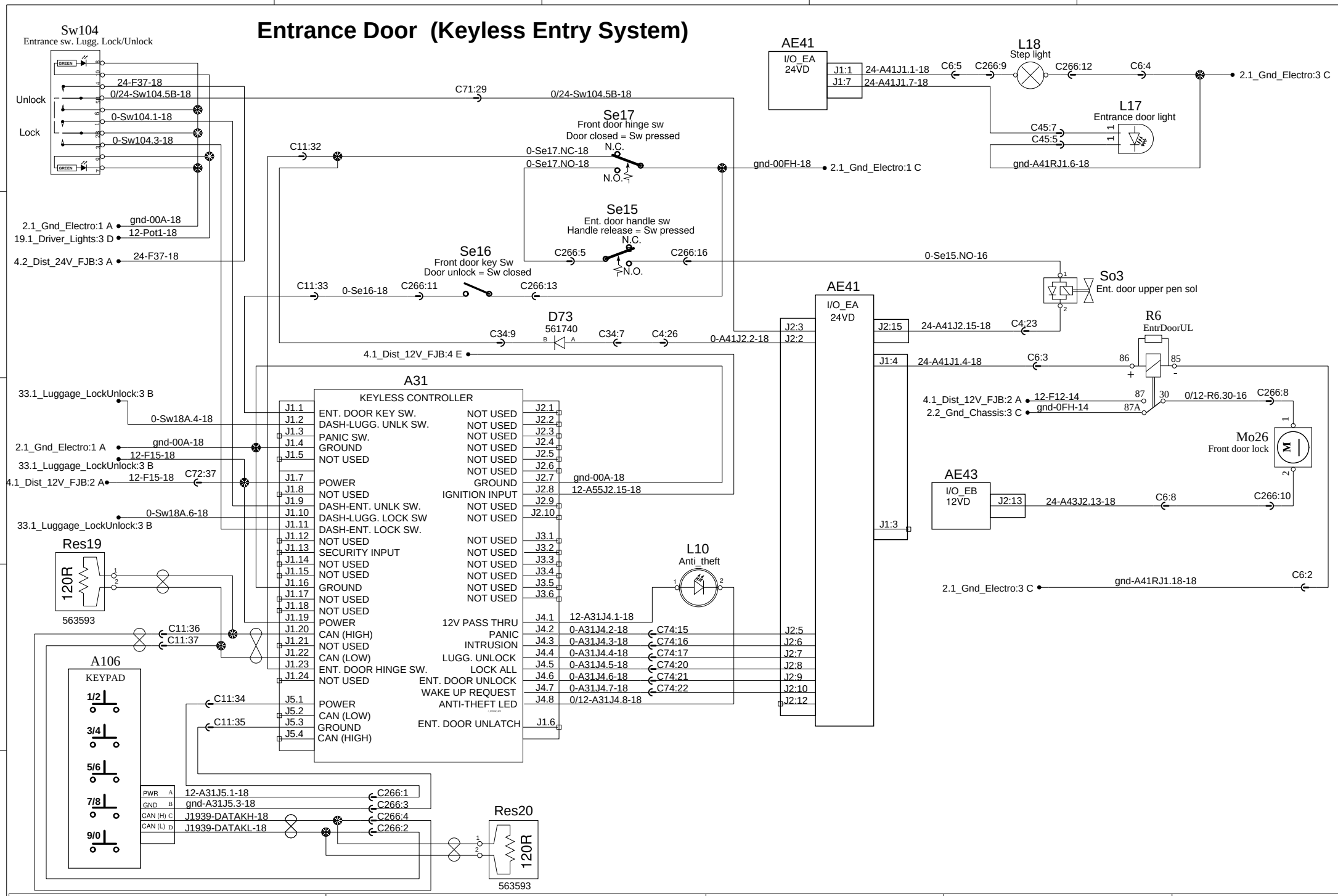

Entrance Door (Keyless Entry System)

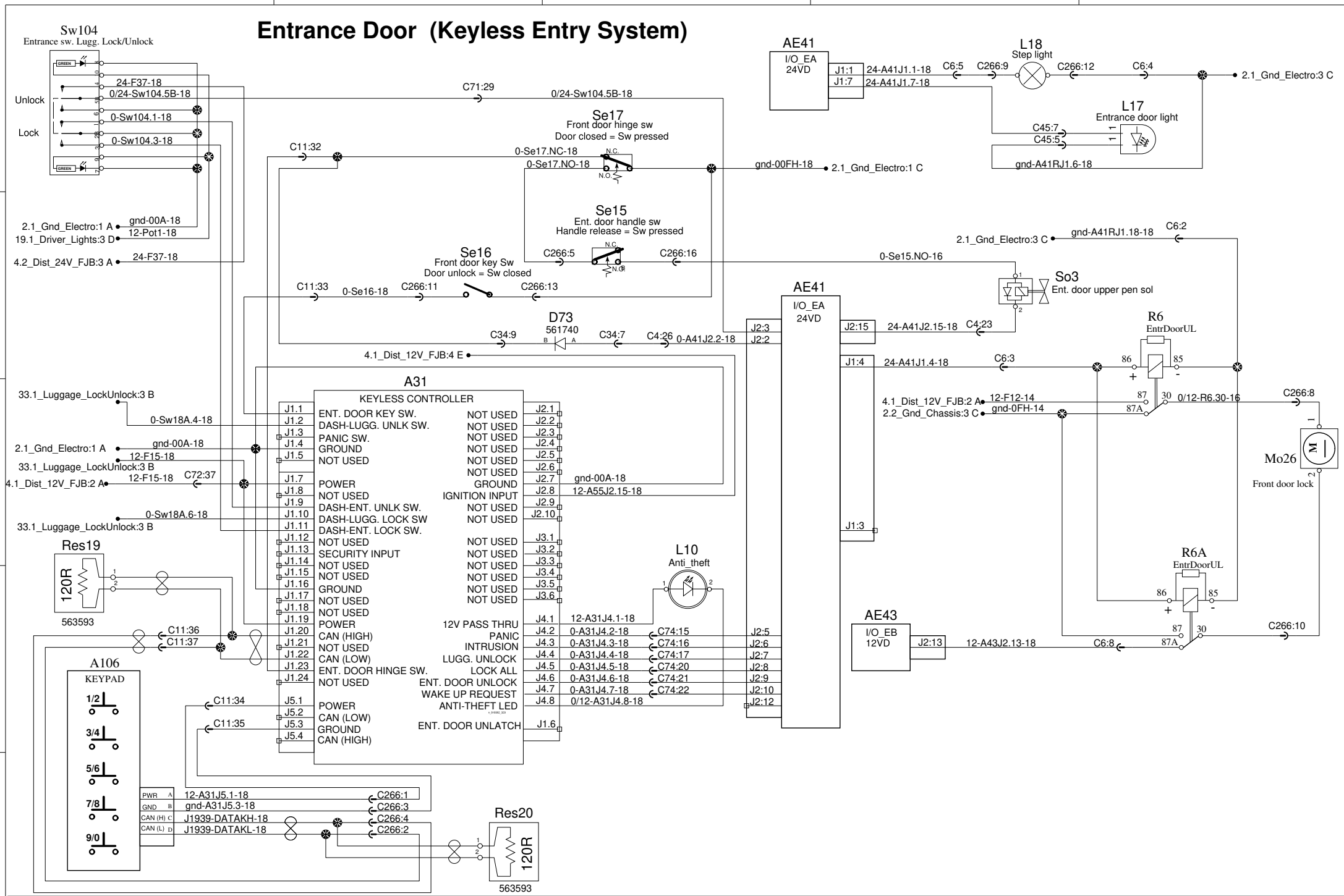

Cust. Adapt. Addl Door Lock/Unlock switch

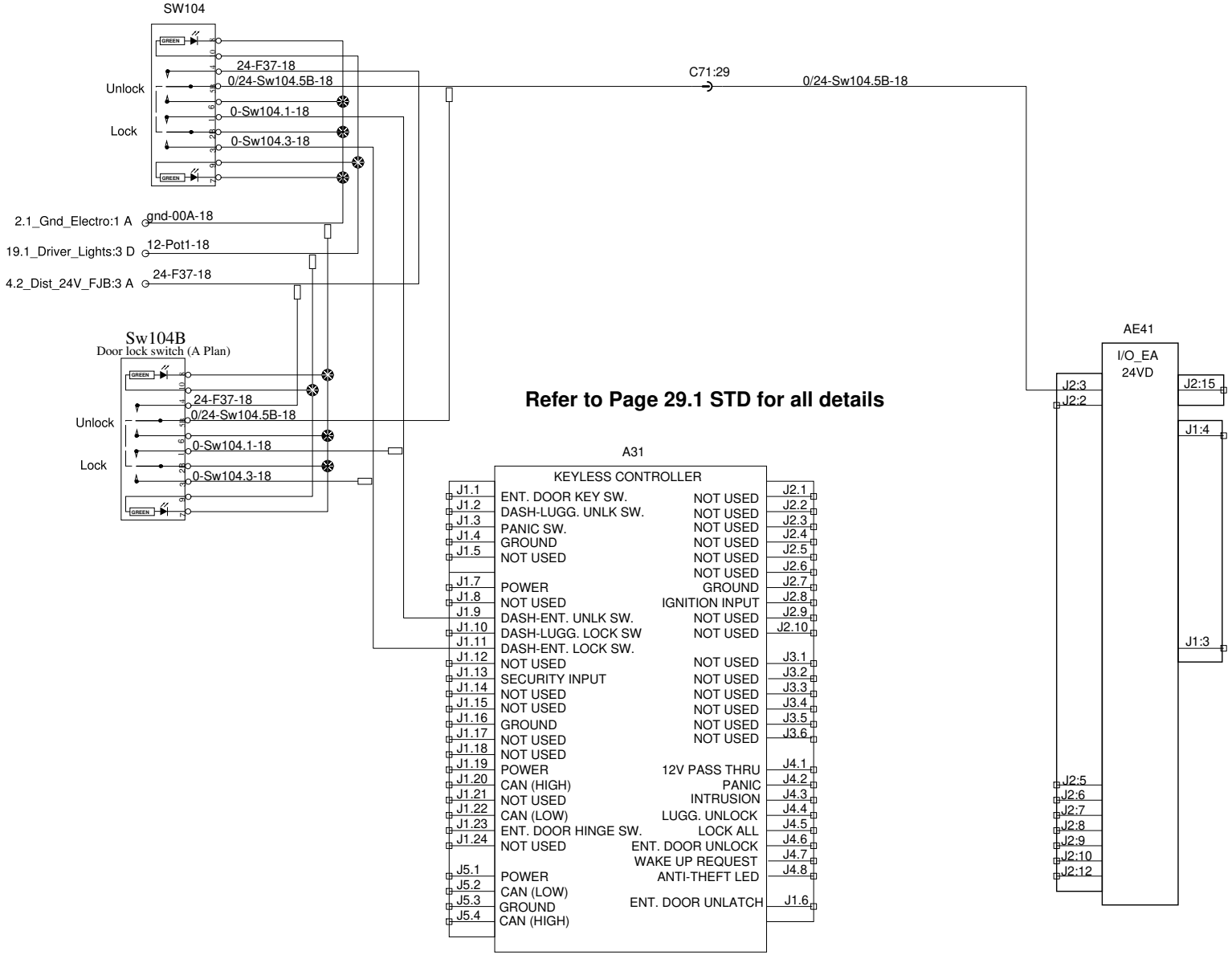

Entrance Door (Keyless Entry System)

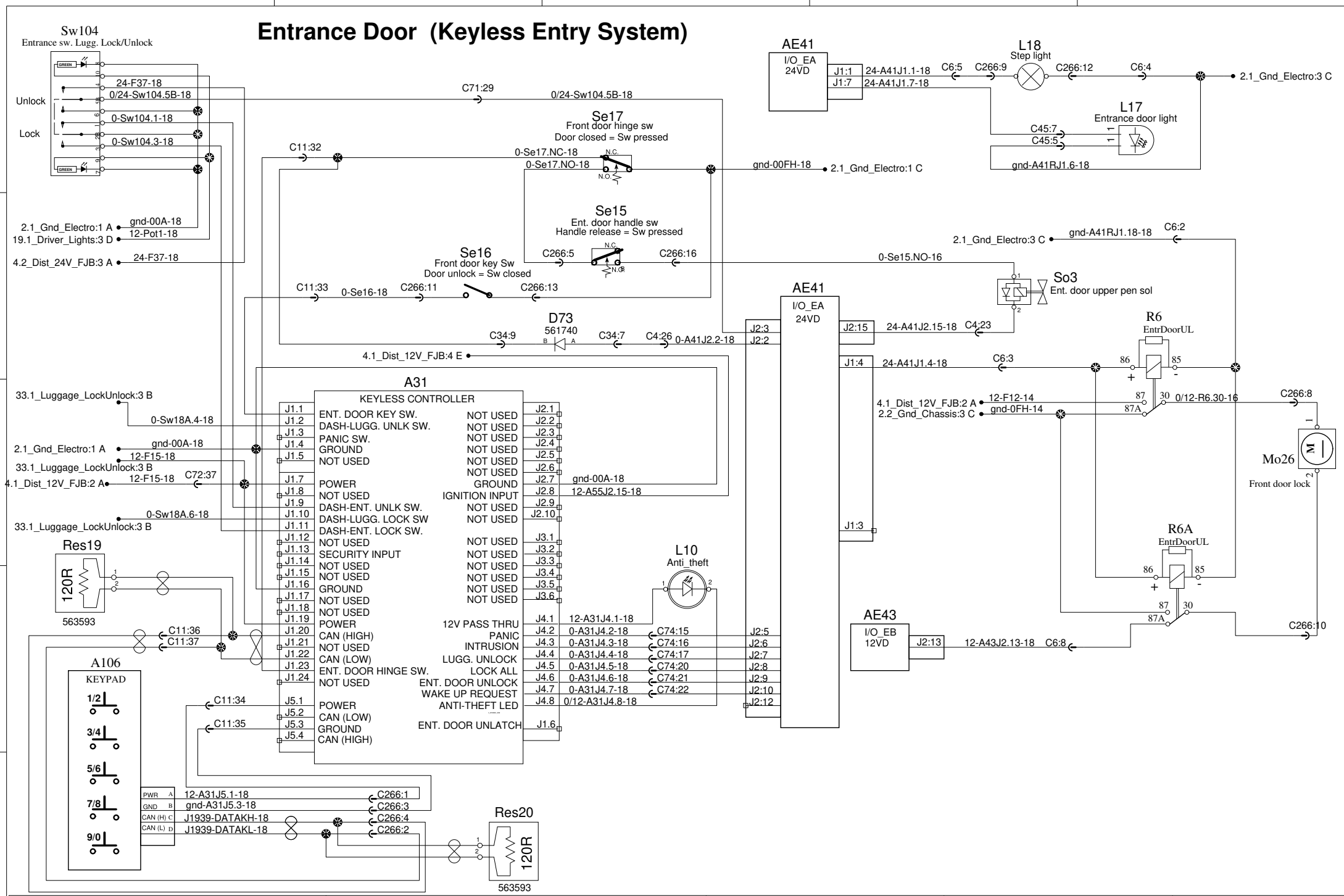

Cust. Adapt. Addl Door Lock/Unlock switch

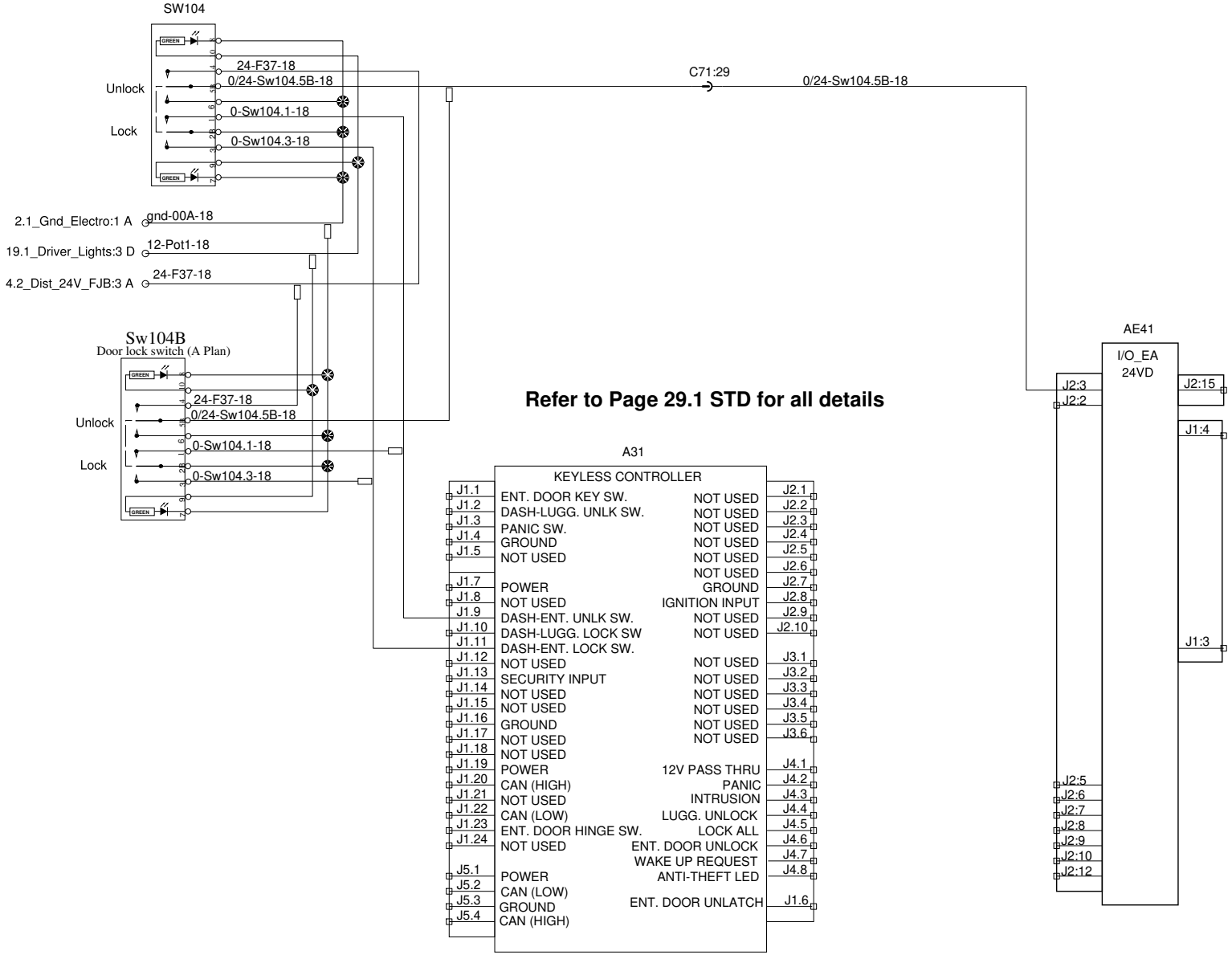

Driver and entrance window

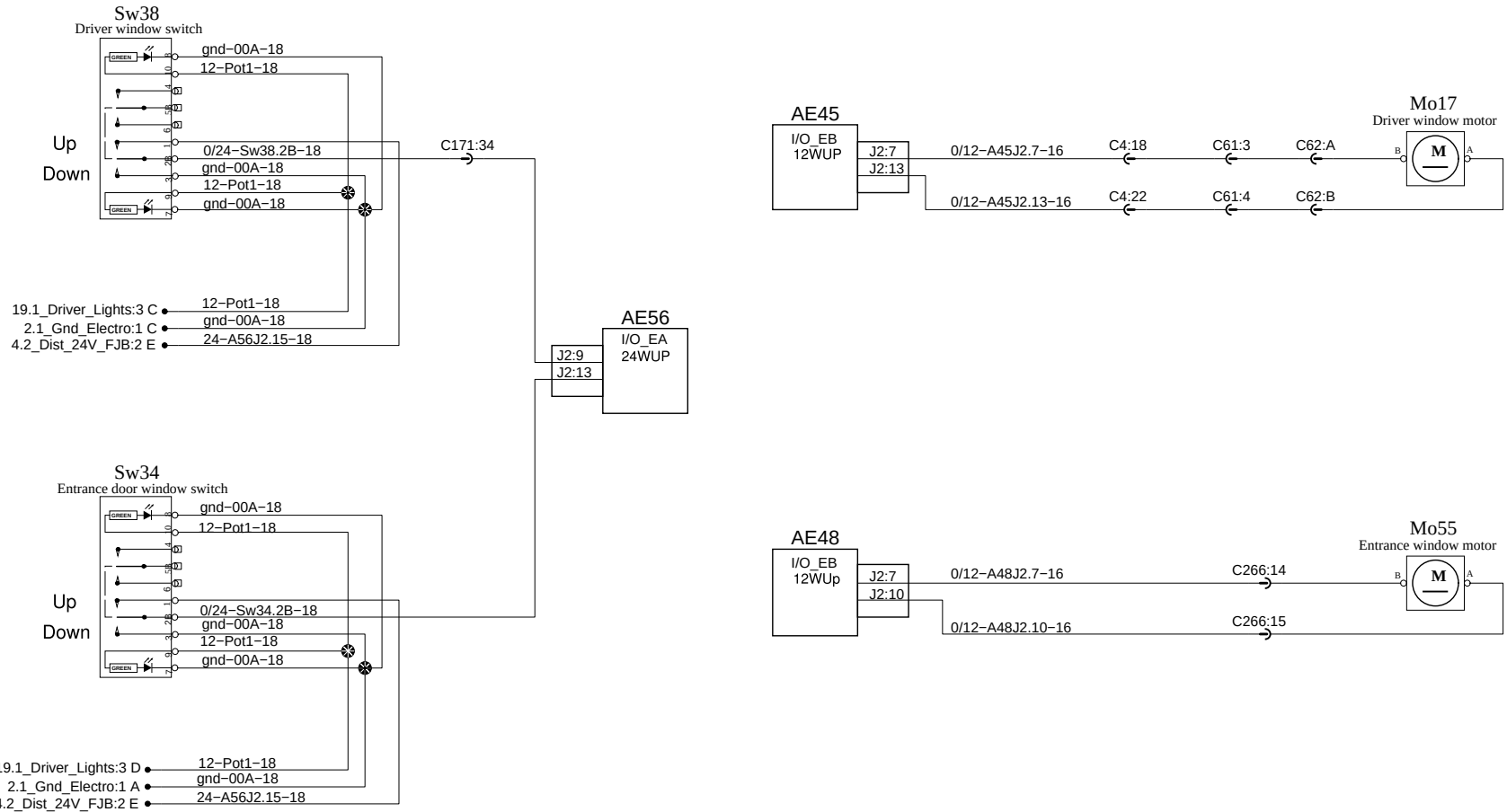

12V Outlets

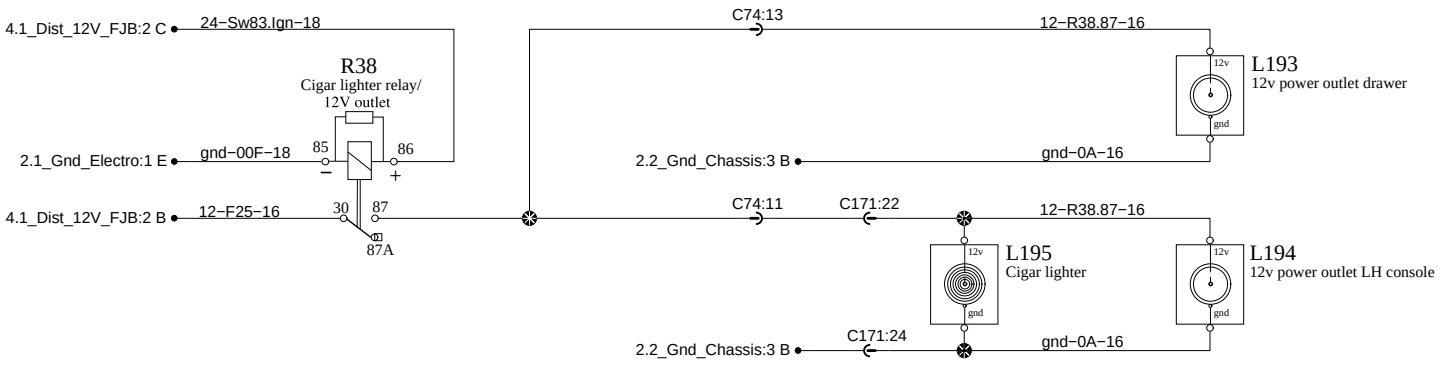
4.1_Dist_12V_FJB:2 C
24−Sw83.Ign−18
R38
Cigar lighter relay/
12V outlet
2.1_Gnd_Electro:1 E
gnd−00F−18
85
86
−
+
4.1_Dist_12V_FJB:2 B
12−F25−16
30
87
87A
C74:13
12−R38.87−16
12v
gnd
L193
12v power outlet drawer
2.2_Gnd_Chassis:3 B
gnd−0A−16
C74:11
C171:22
12−R38.87−16
L195
Cigar lighter
L194
12v power outlet LH console
C171:24
2.2_Gnd_Chassis:3 B
gnd−0A−16

12V Outlets

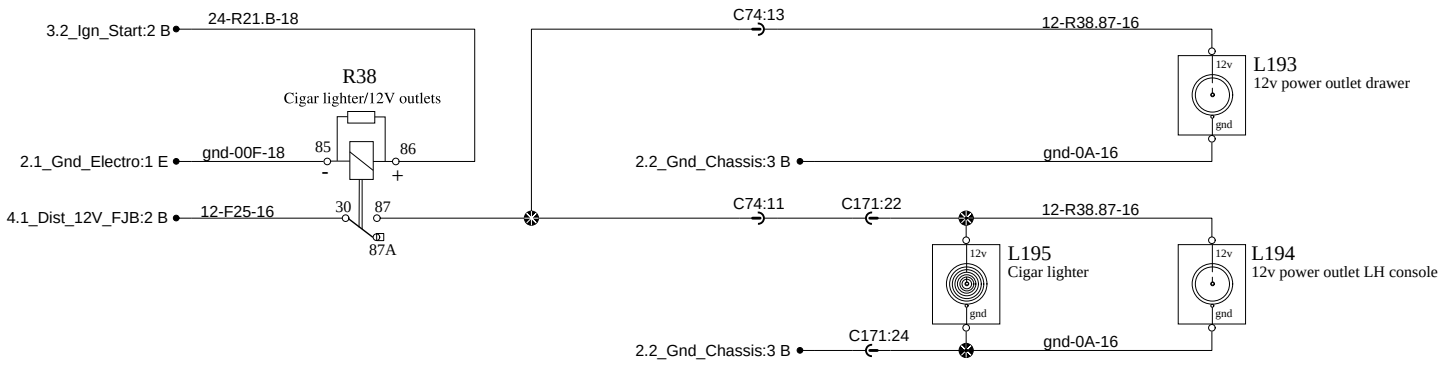
3.2_Ign_Start:2 B
24-R21.B-18
R38
Cigar lighter/12V outlets
2.1_Gnd_Electro:1 E
gnd-00F-18
85
86
-
+
4.1_Dist_12V_FJB:2 B
12-F25-16
30
87
87A
C74:13
12-R38.87-16
12v
L193
12v power outlet drawer
gnd
2.2_Gnd_Chassis:3 B
gnd-0A-16
C74:11
C171:22
12-R38.87-16
12v
L195
Cigar lighter
gnd
12v
L194
12v power outlet LH console
gnd
C171:24
2.2_Gnd_Chassis:3 B
gnd-0A-16

Driver seat with heating function

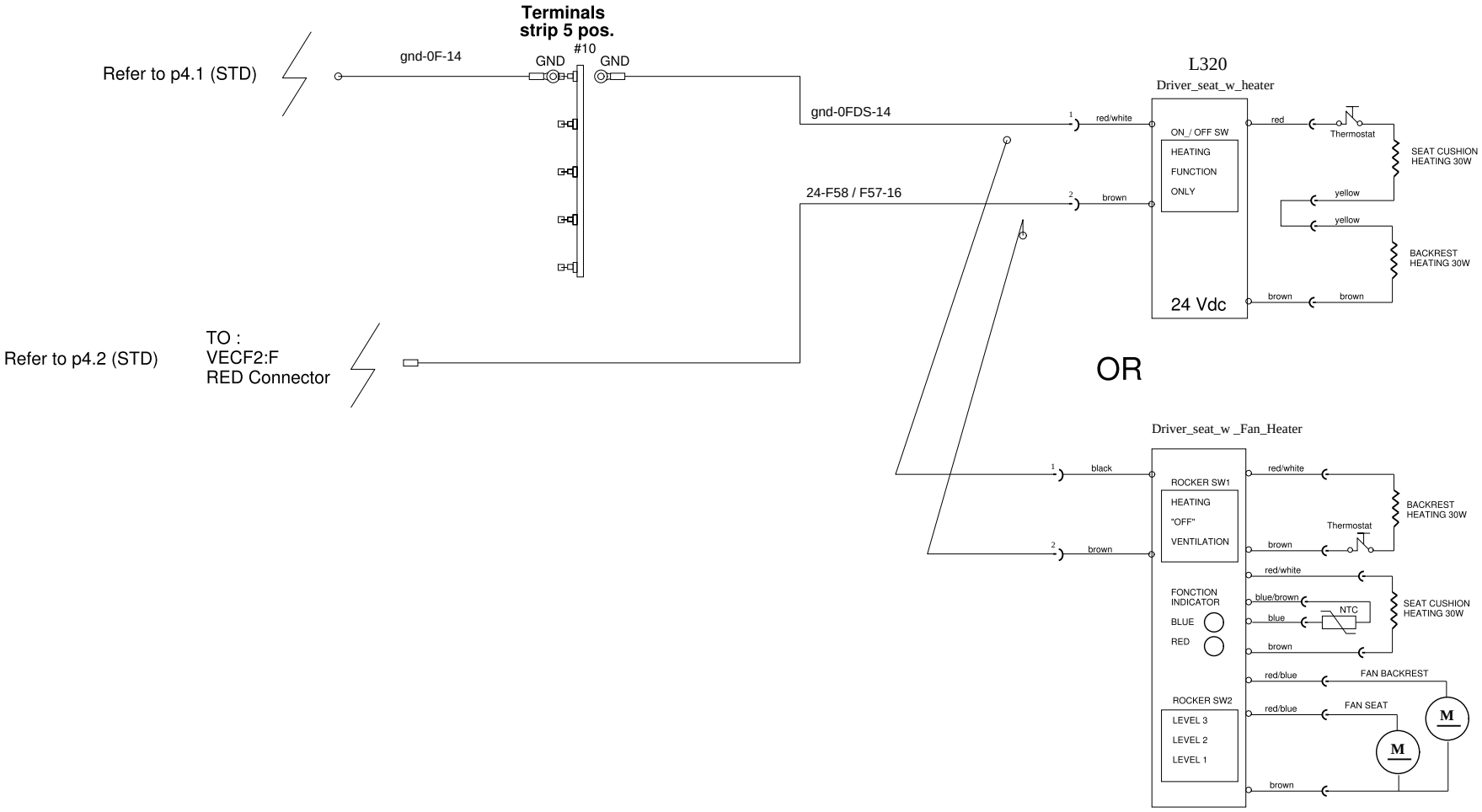

Mirrors, 2 adjustments switches and heat

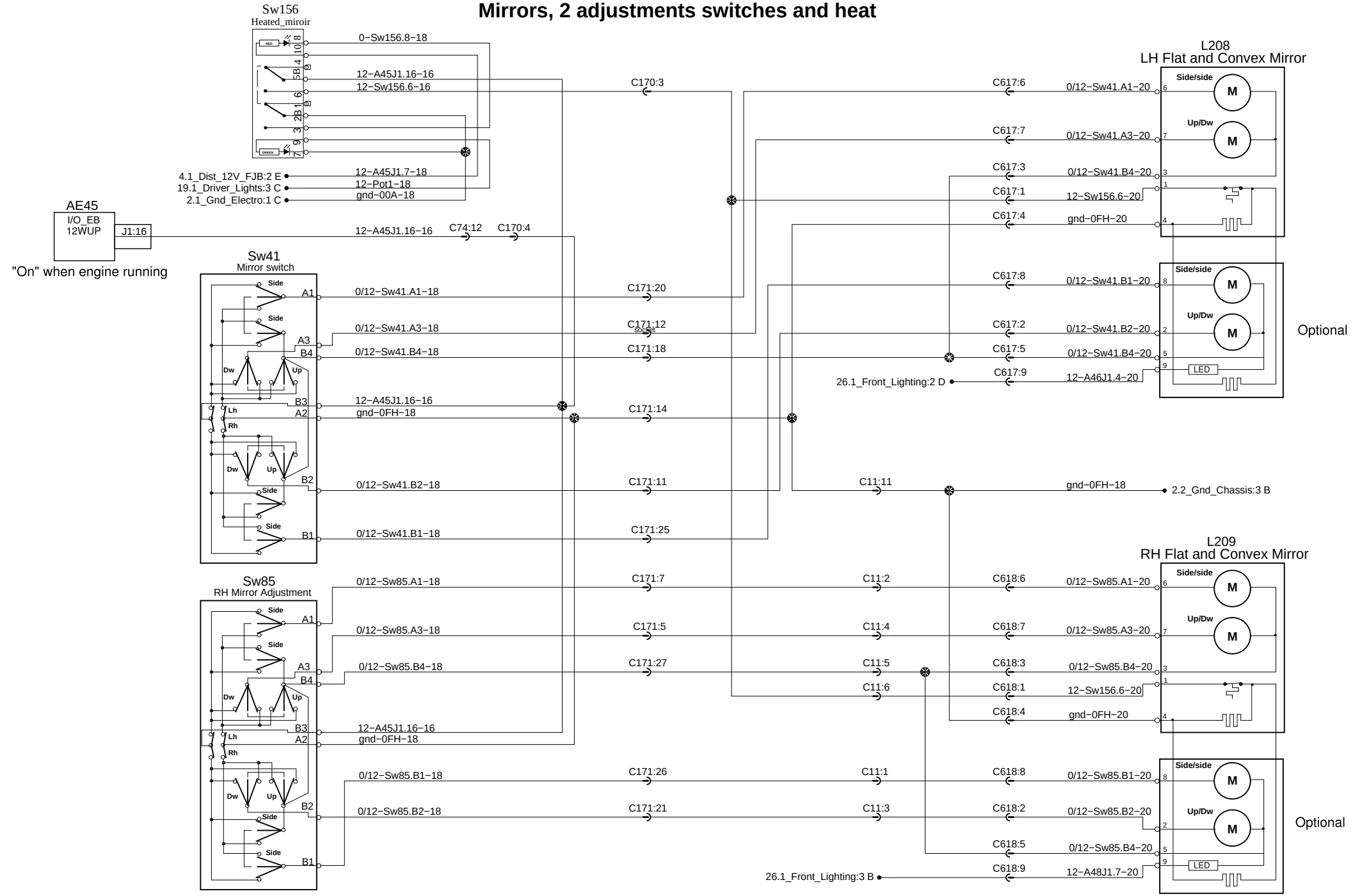

PREVOST®	WIRING DIAGRAM	No:D061670	Page:31.1	Rev:1

Electronic Mirrors (eMirrors)

Info: Mirrors remains ON about 2 minutes after Ignition key turn OFF

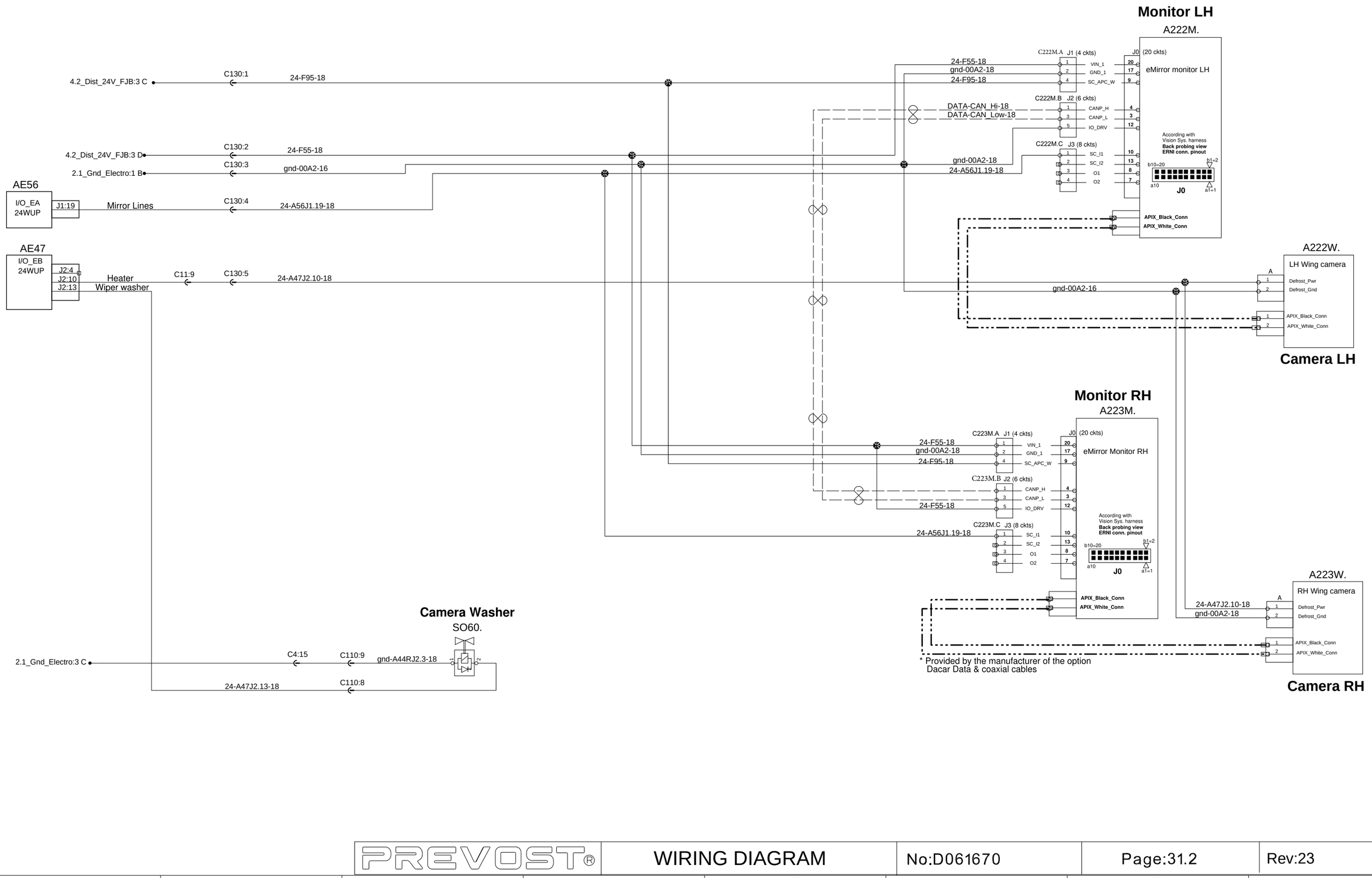

Tag and Level low

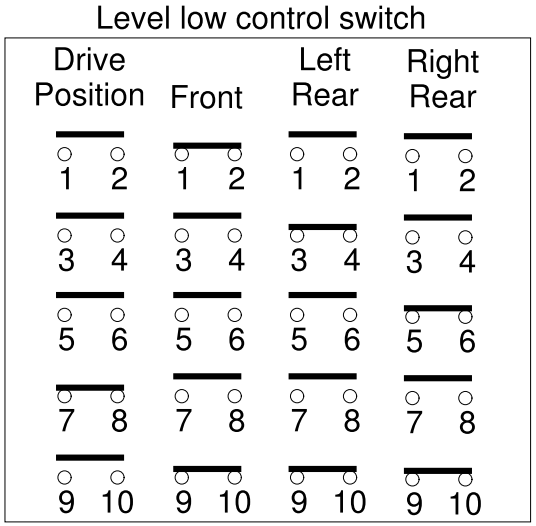

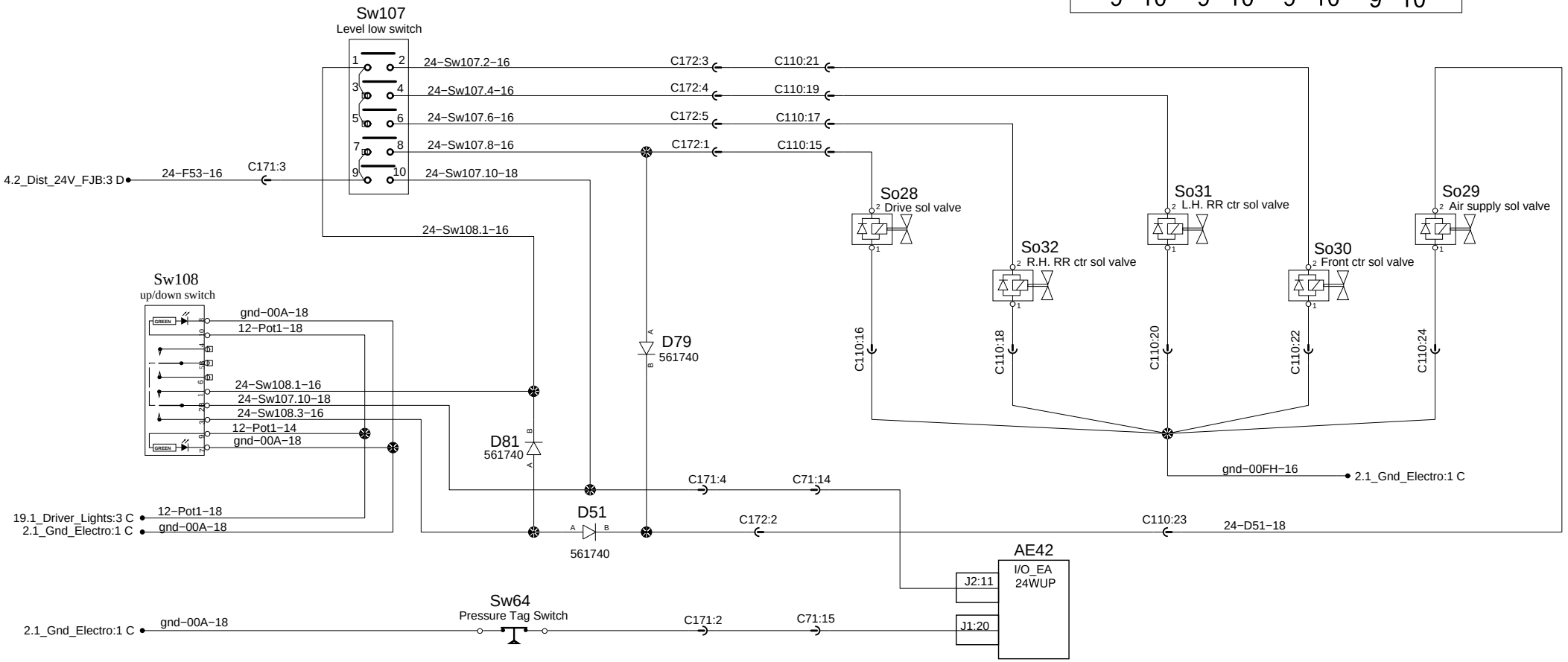

Electronic Mirrors (eMirrors)

Info: Mirrors remains ON about 2 minutes after Ignition key turn OFF

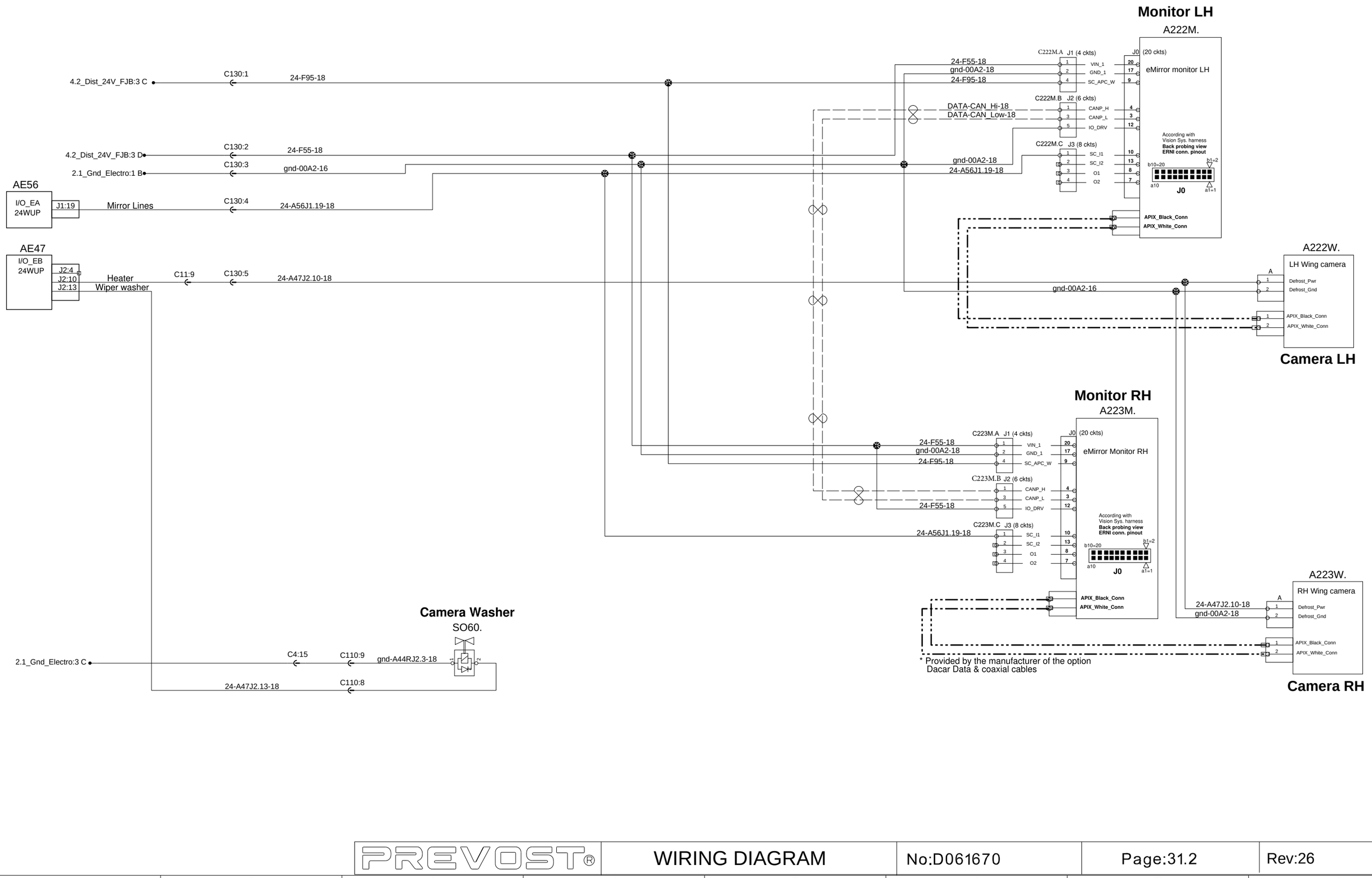

Luggage doors Lock/Unlock

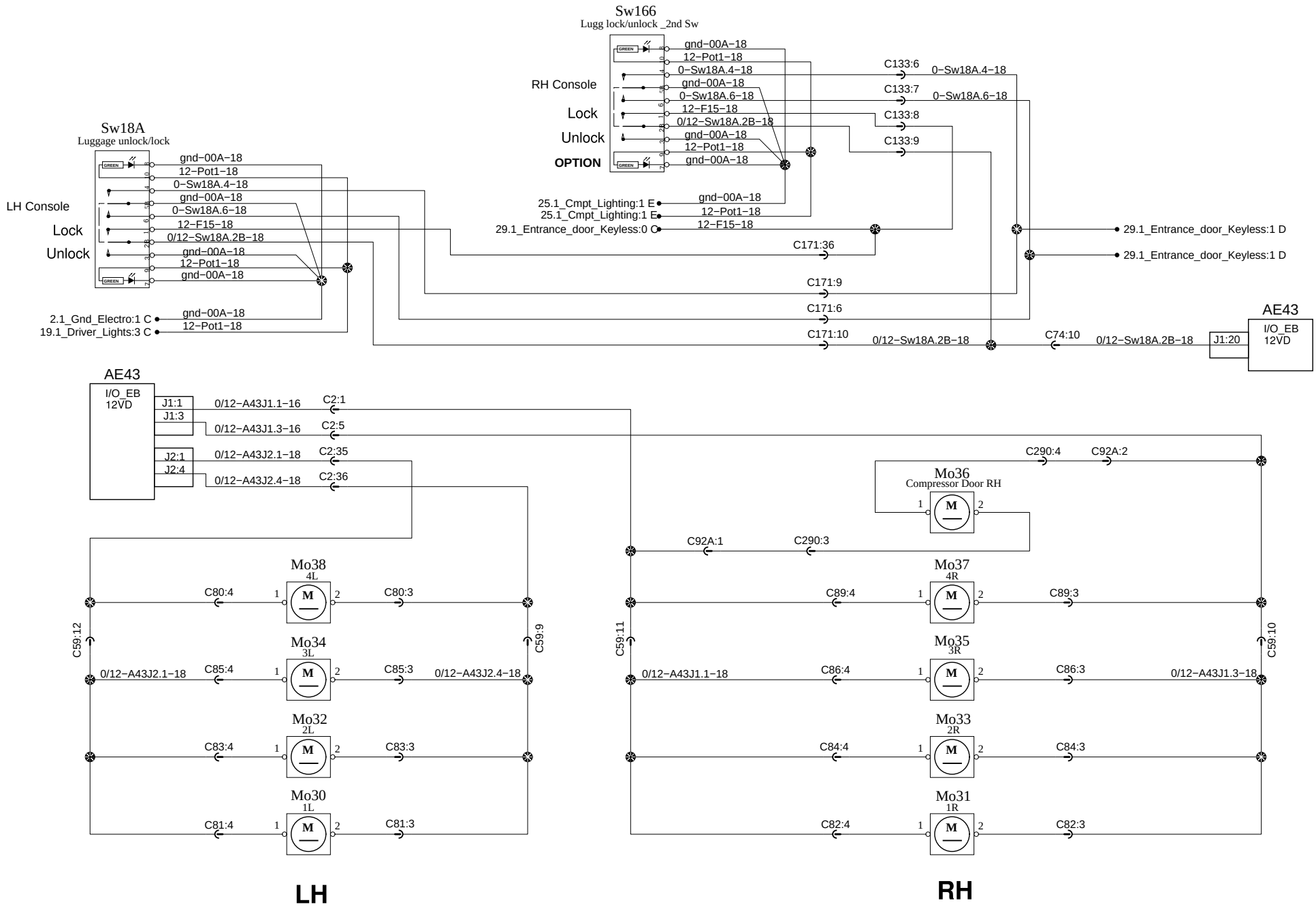

Luggage doors lock/unlock

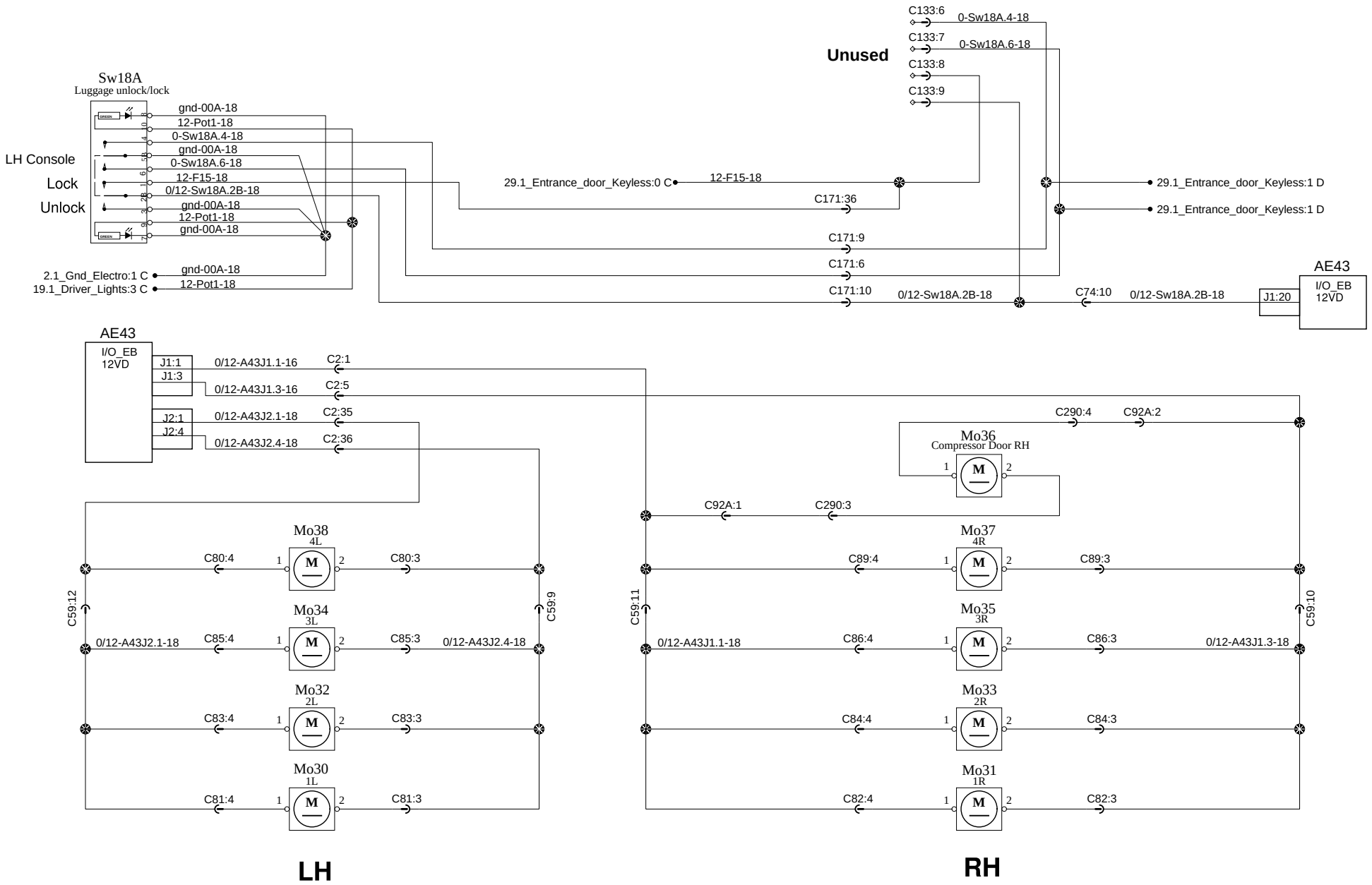

Luggage doors lock/unlock
Customer Adaptation RH Console Sw.

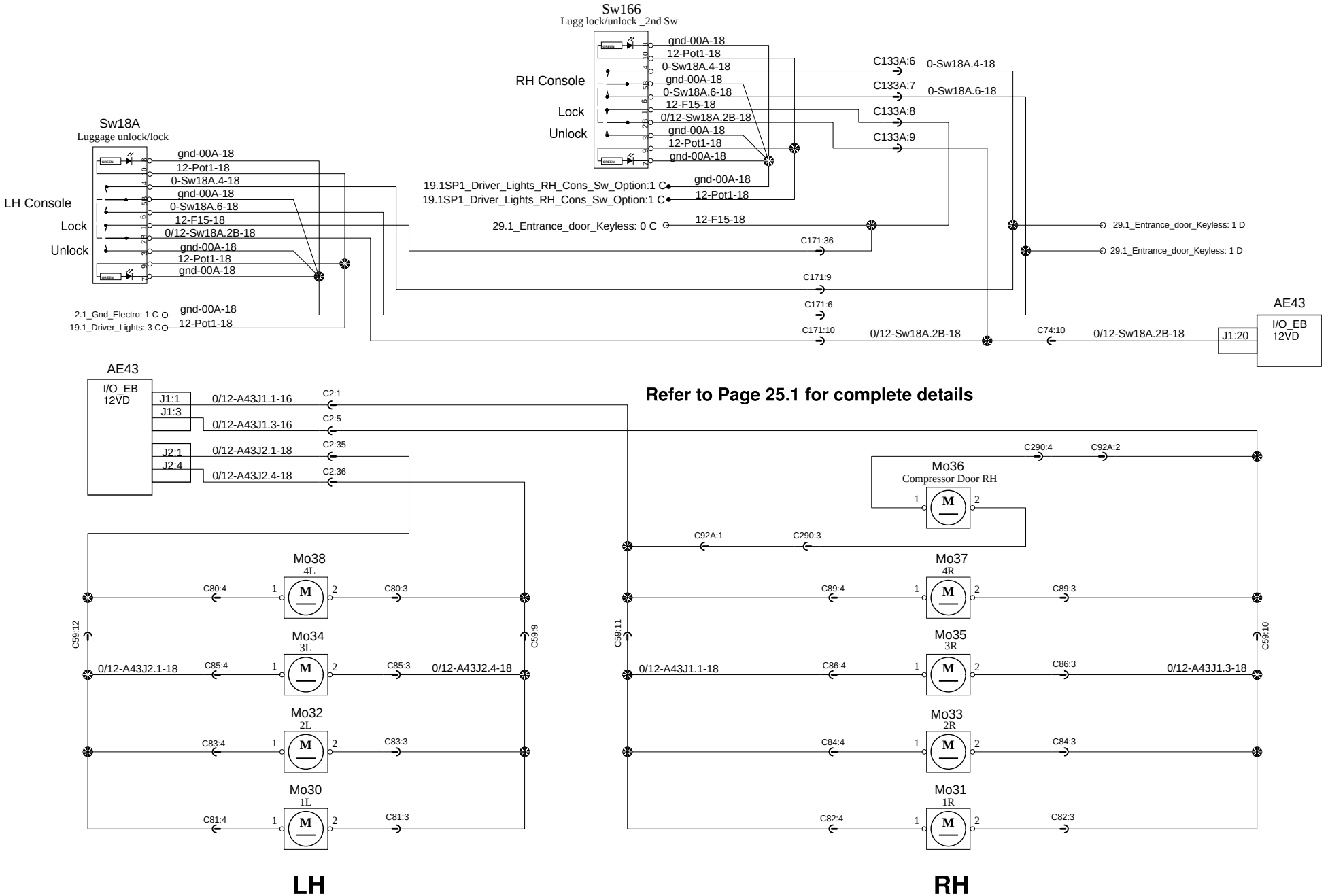

Luggages doors locks switches

Switch closed = Door locked

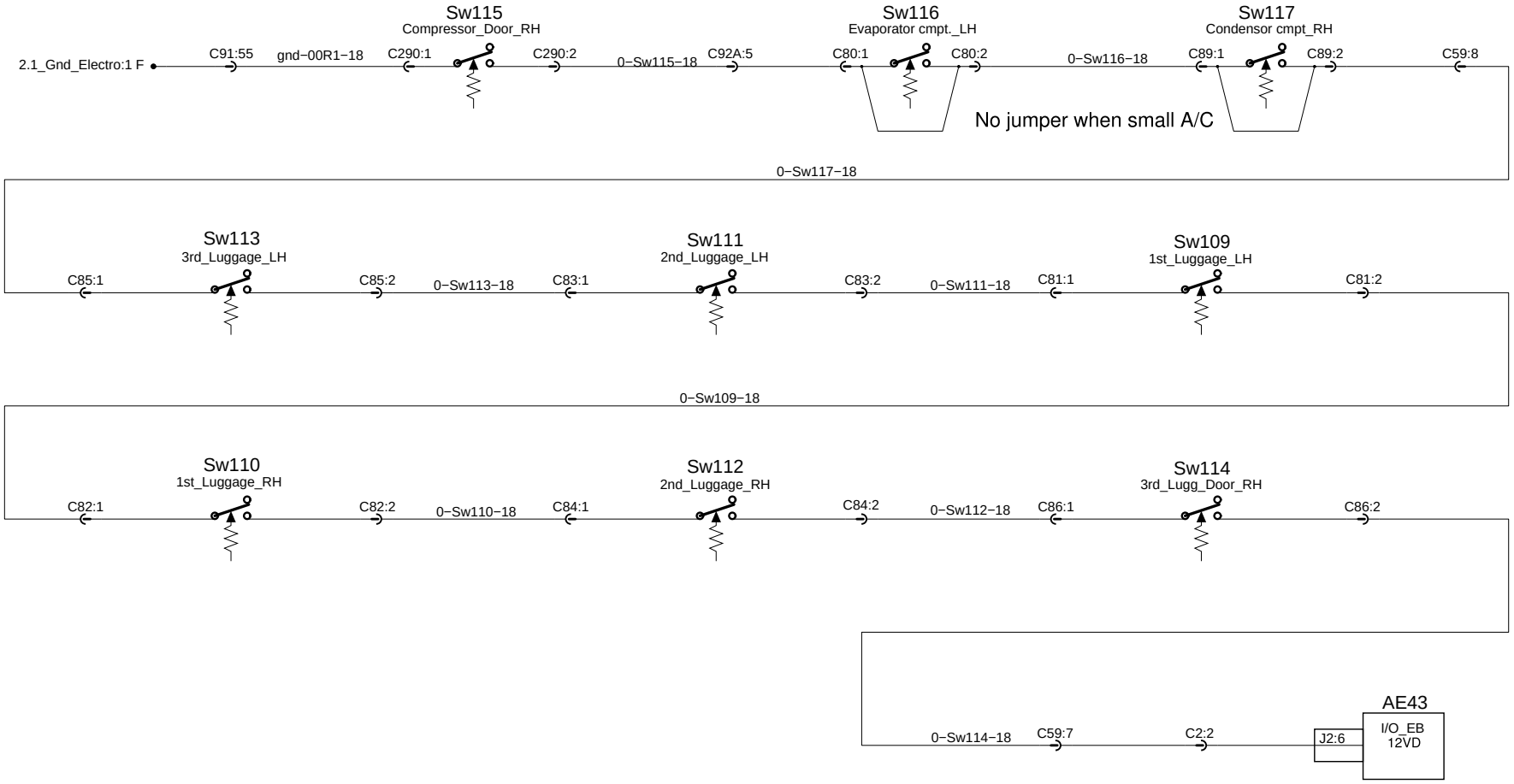

Luggages doors locks switches

Switch closed = Door locked

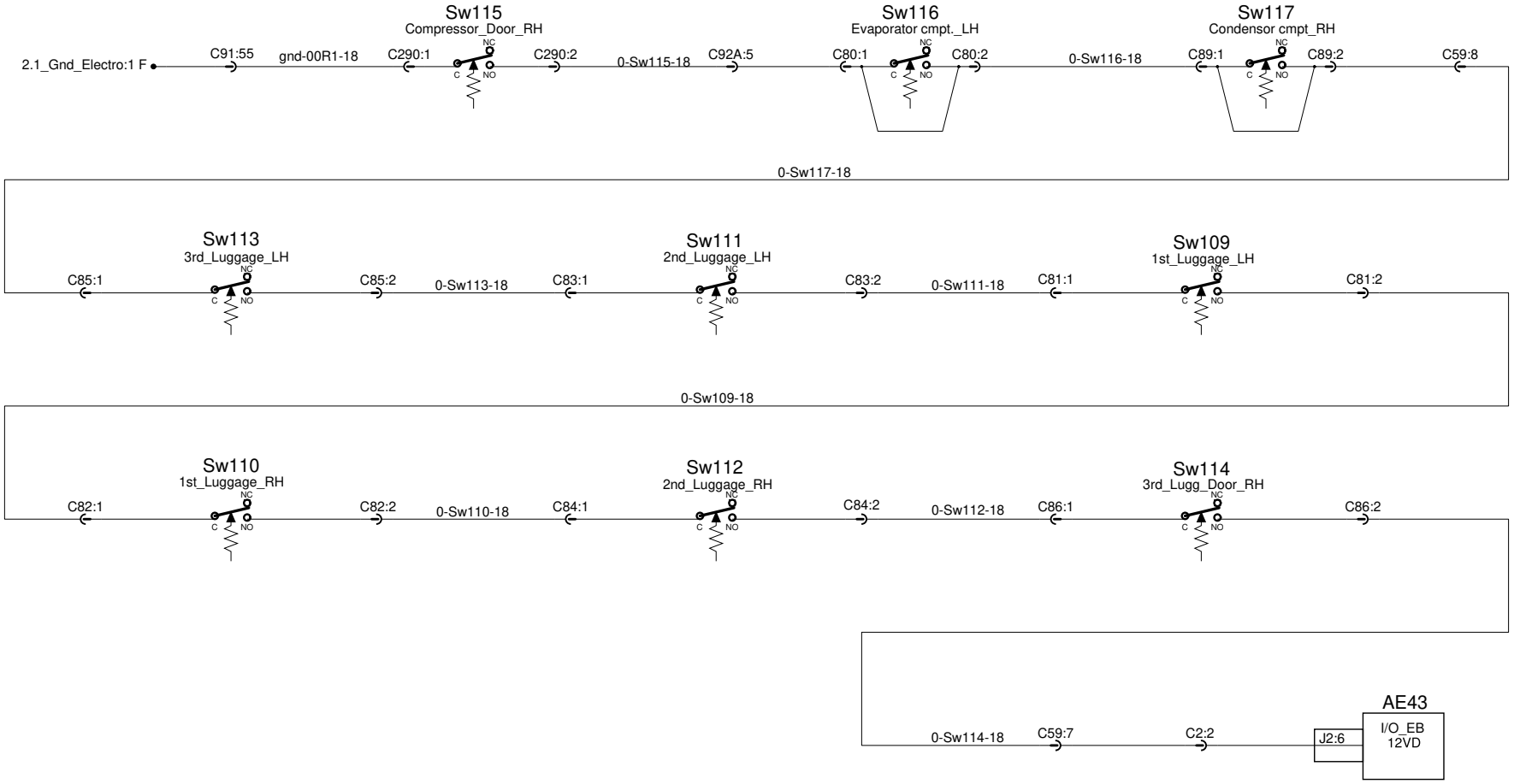

Wipers and washer

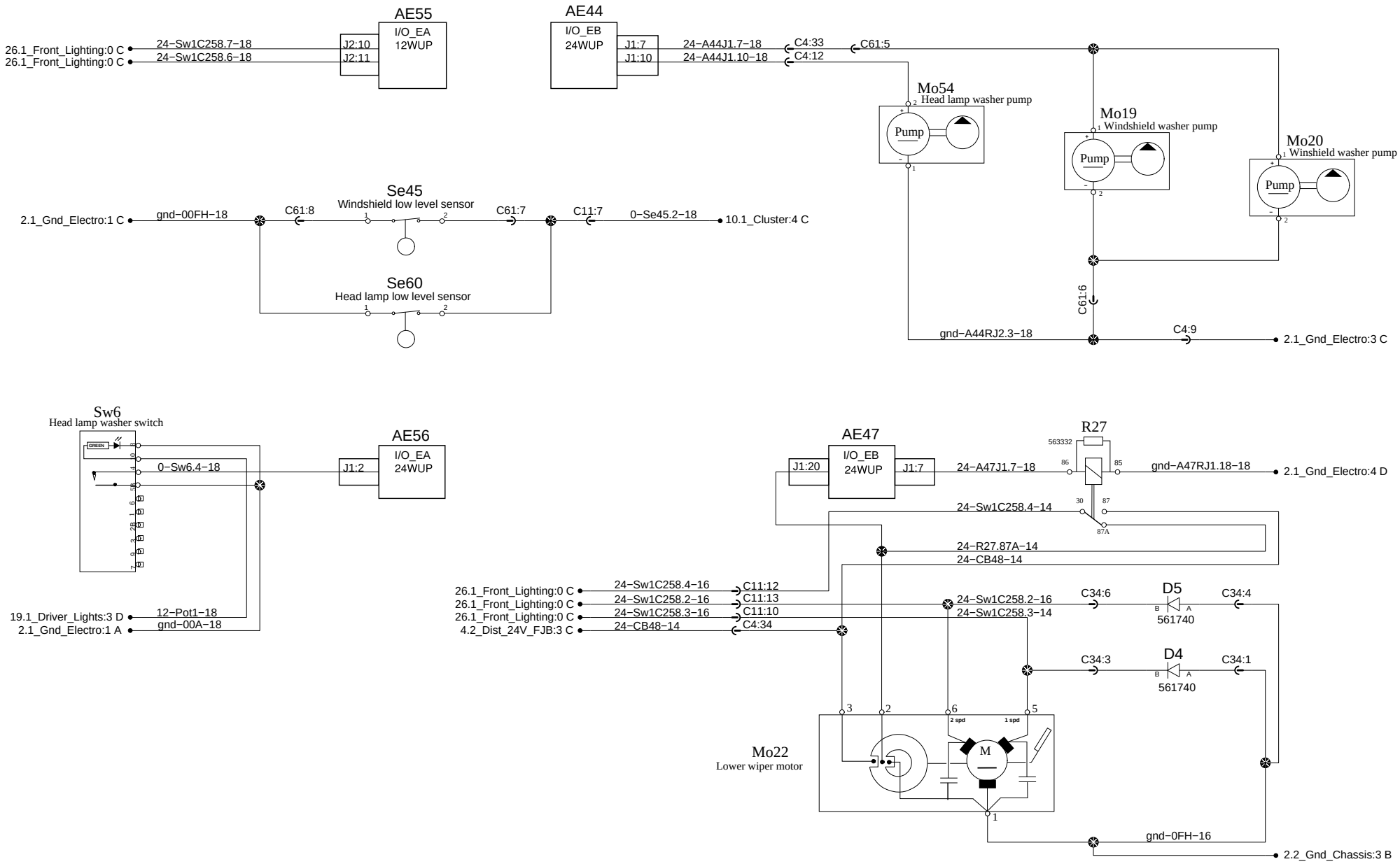

Wipers and washer

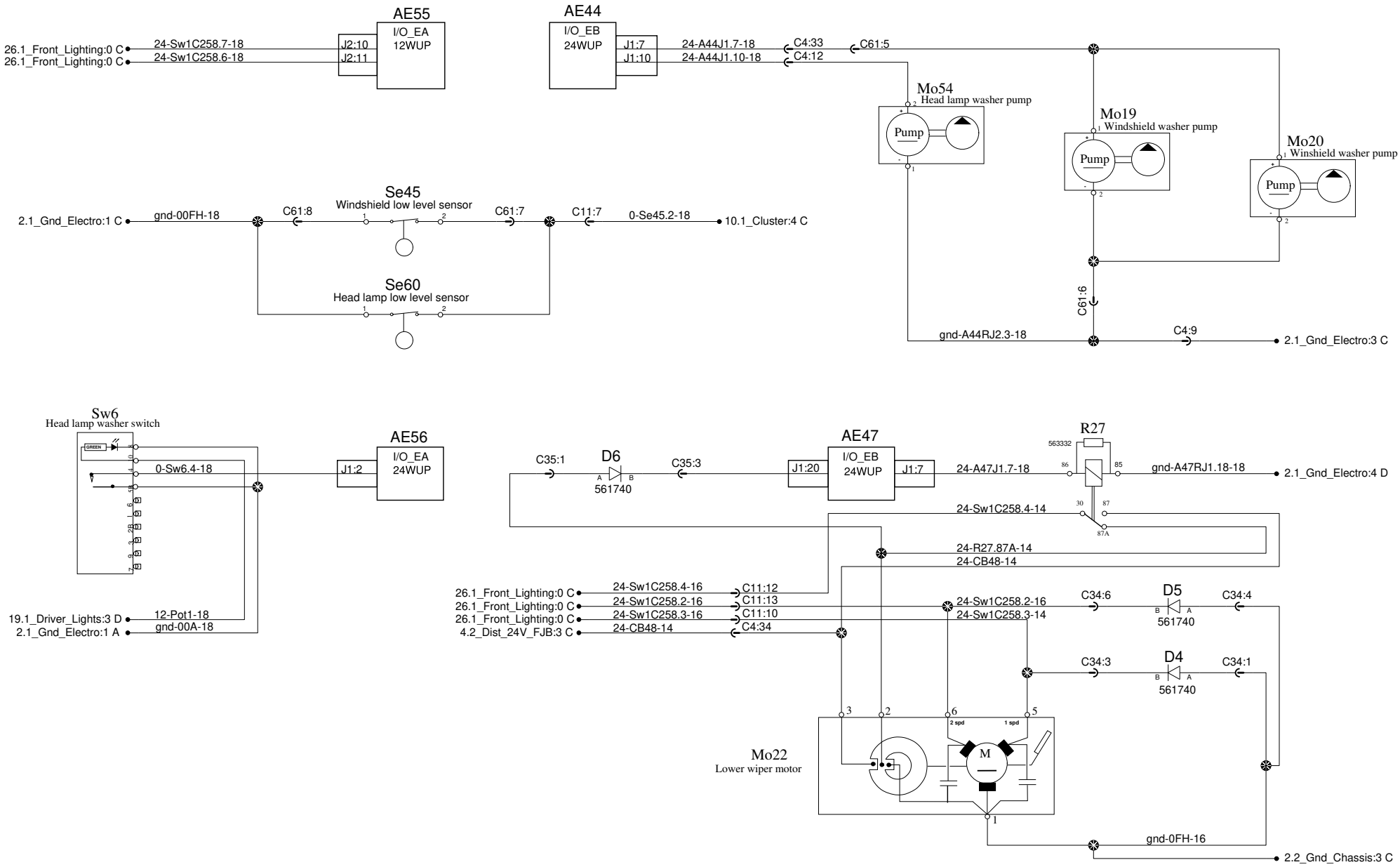

PREVOST®	WIRING DIAGRAM	No:D061670	Page:34.1	Rev:29

Wheel chair lift Ricon 9000 (option)

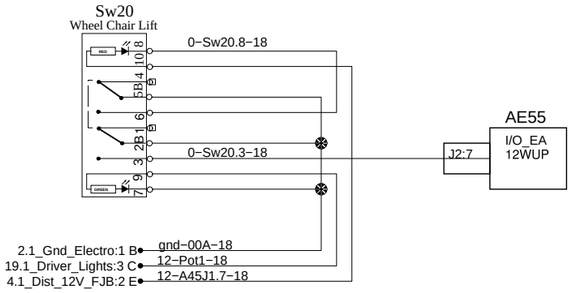

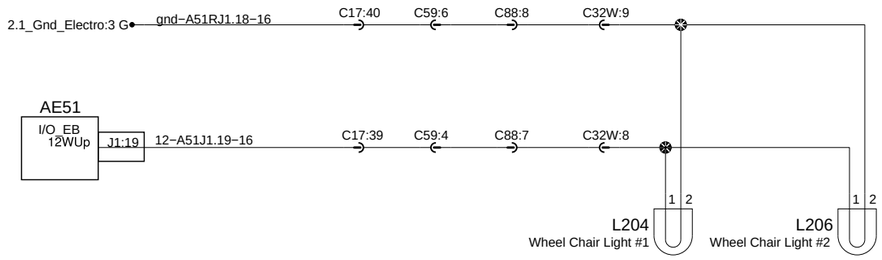

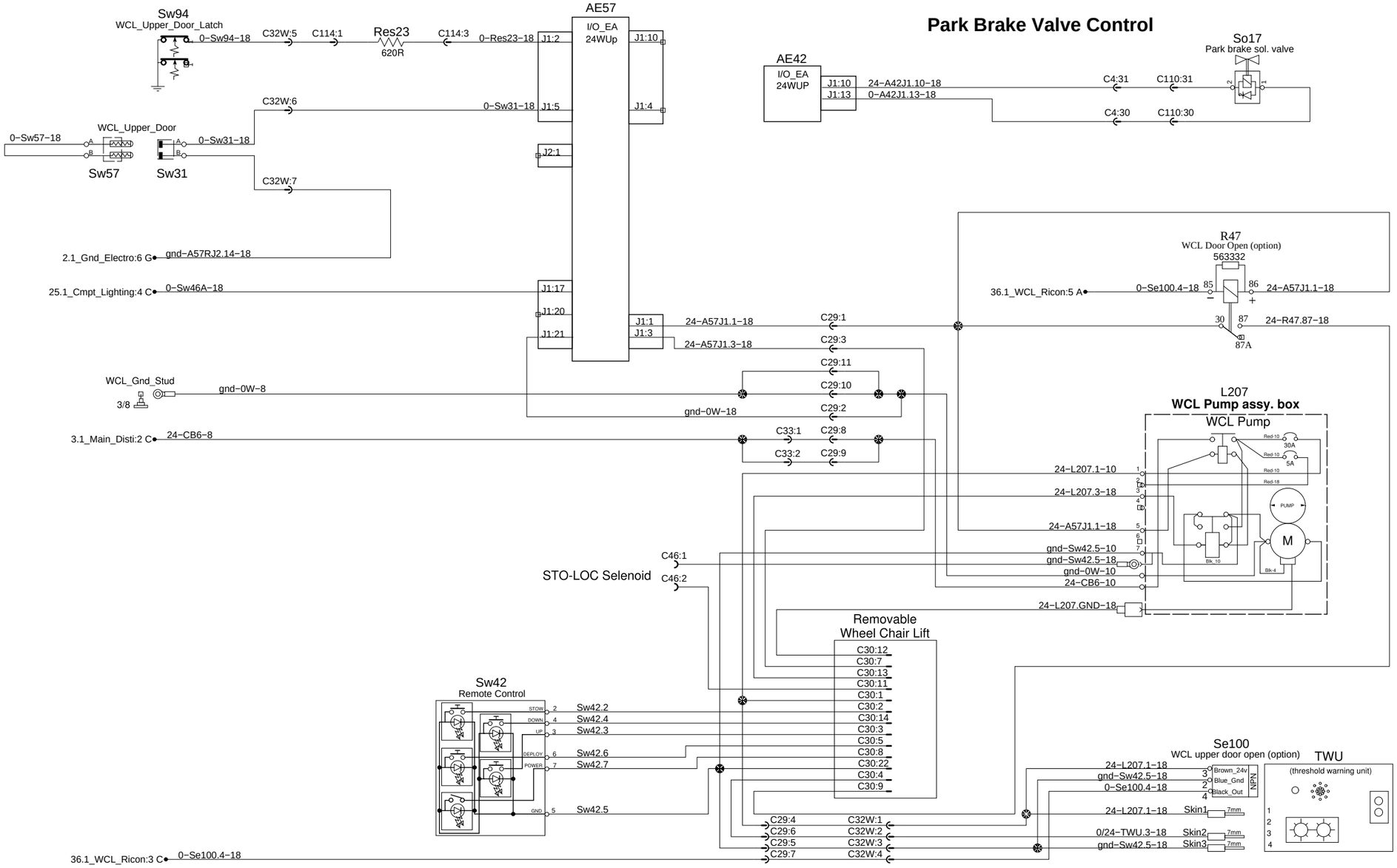

Park Brake Valve Control

Wheel chair lift Ricon 9000 (option)

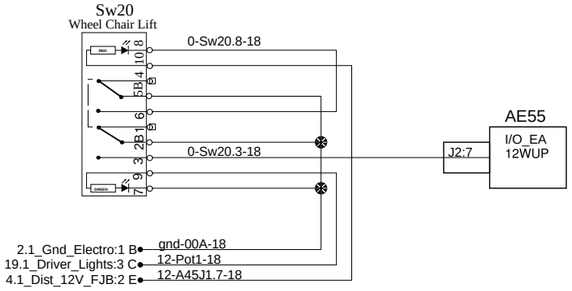

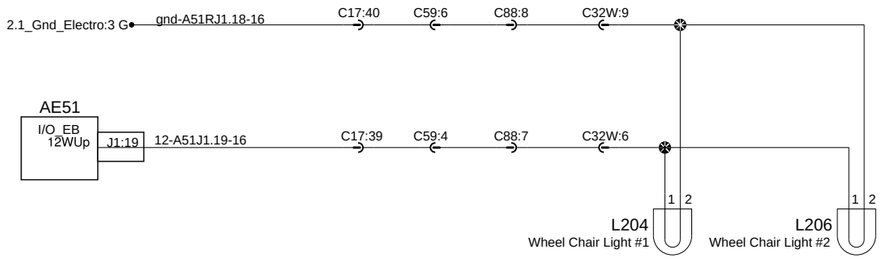

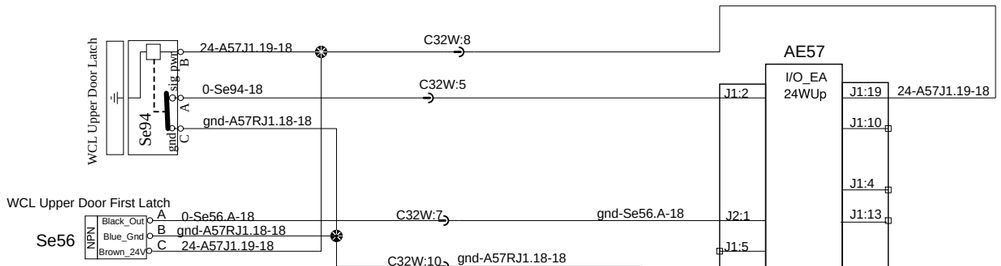

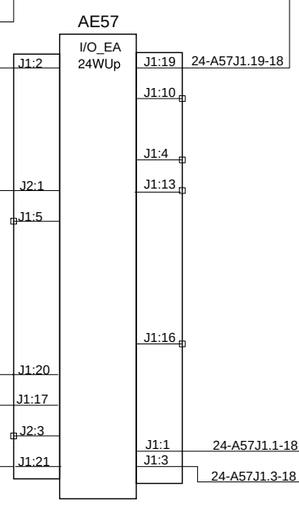

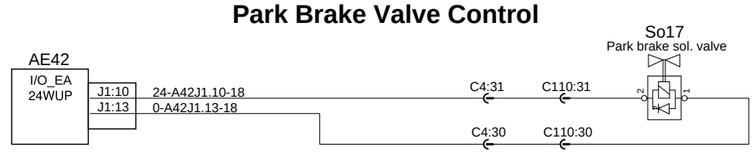

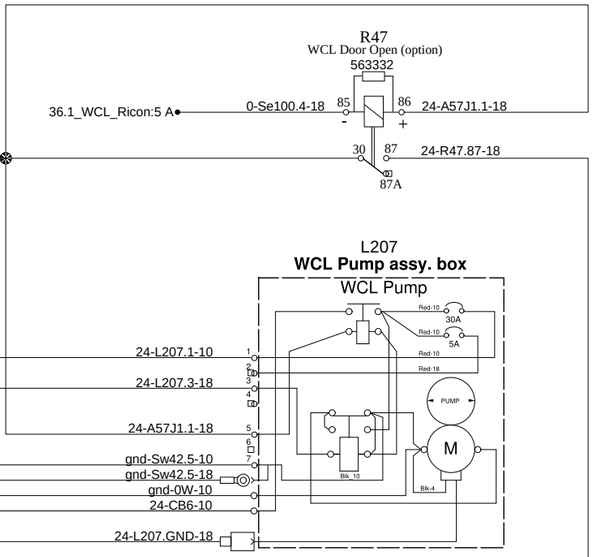

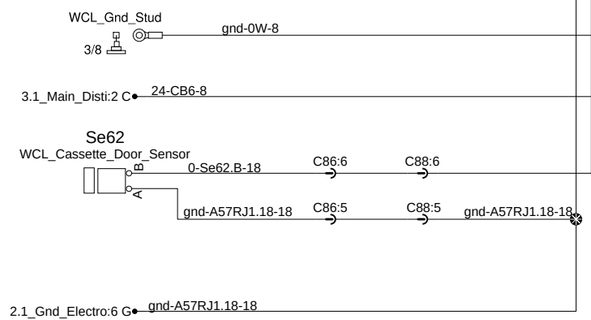

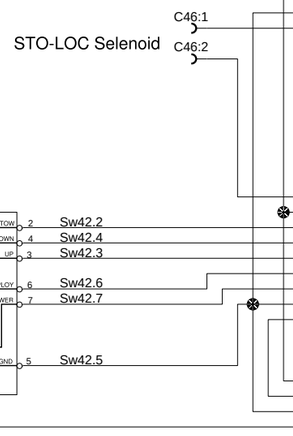

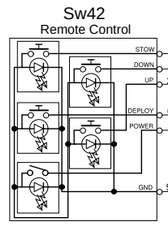

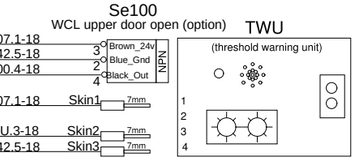



PREVOST®	WIRING DIAGRAM	No:D061670	Page:36.1	Rev:11

Volvo Link TGW

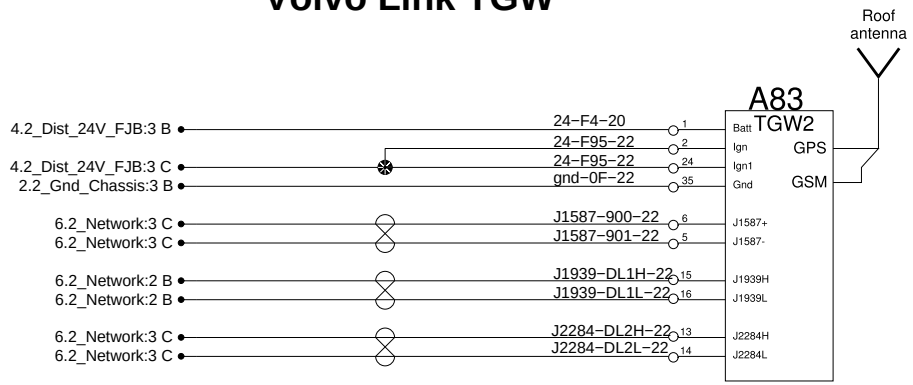

Air Dryer Electric Control and Heater

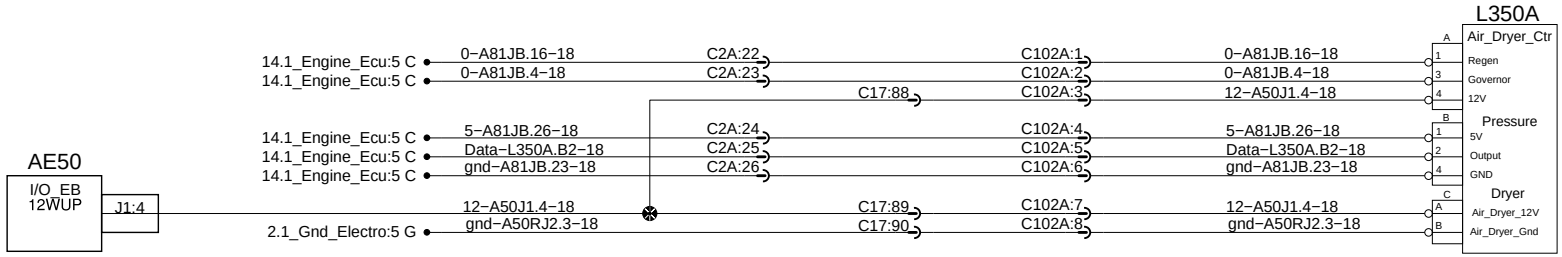

Power steering control

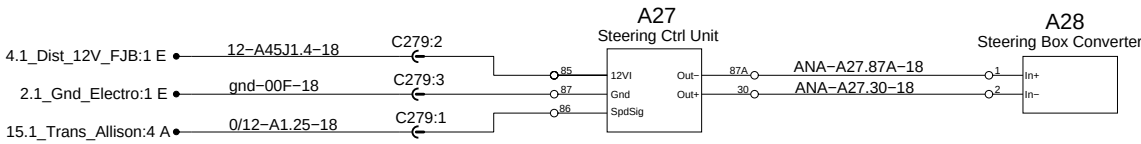

Automatic fire suppression system

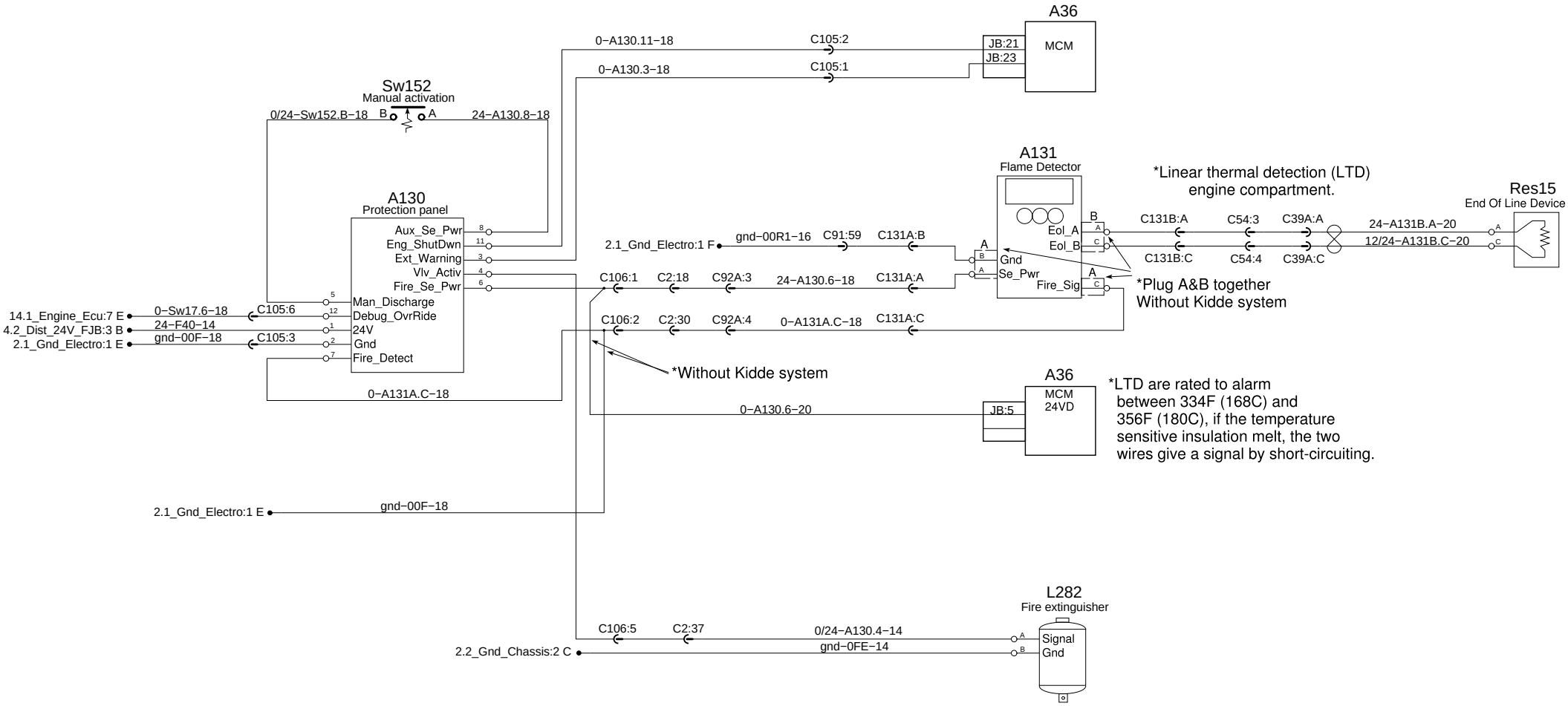

Automatic fire suppression system

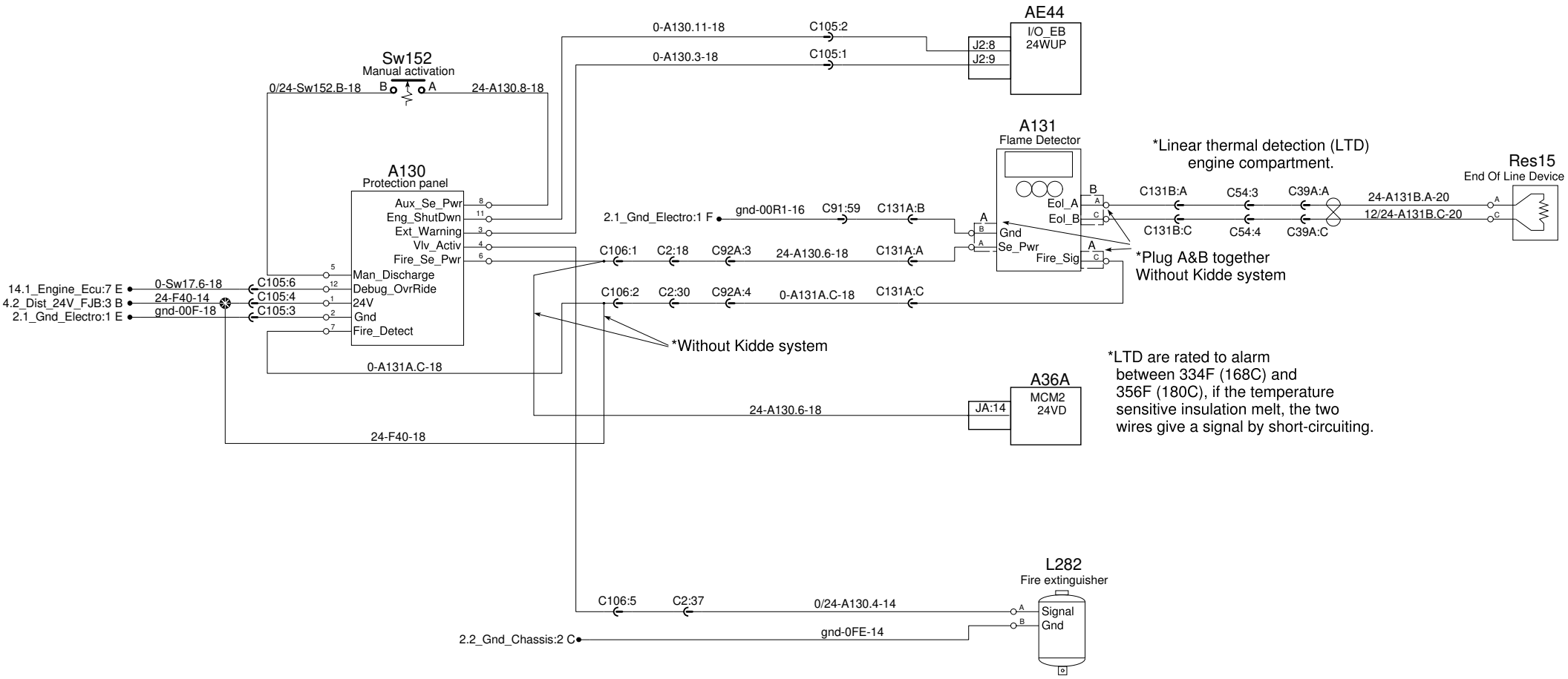

PREVOST®	WIRING DIAGRAM	No:D061670	Page:38.1	Rev:30

Tire pressure monitoring system

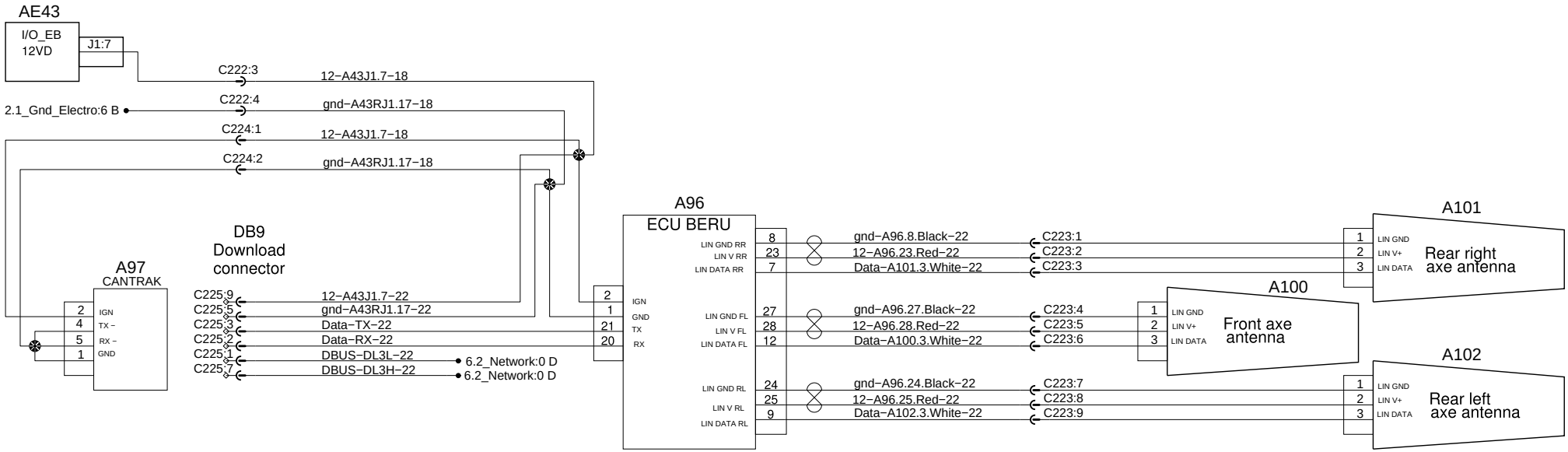

Adaptative cruise control breaking

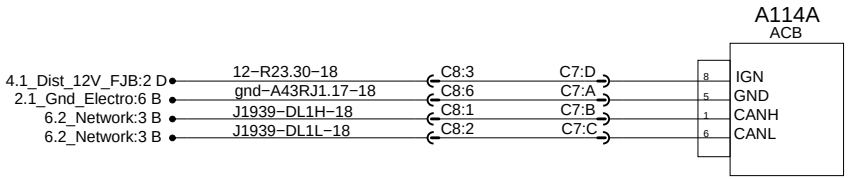

Tire pressure monitoring system

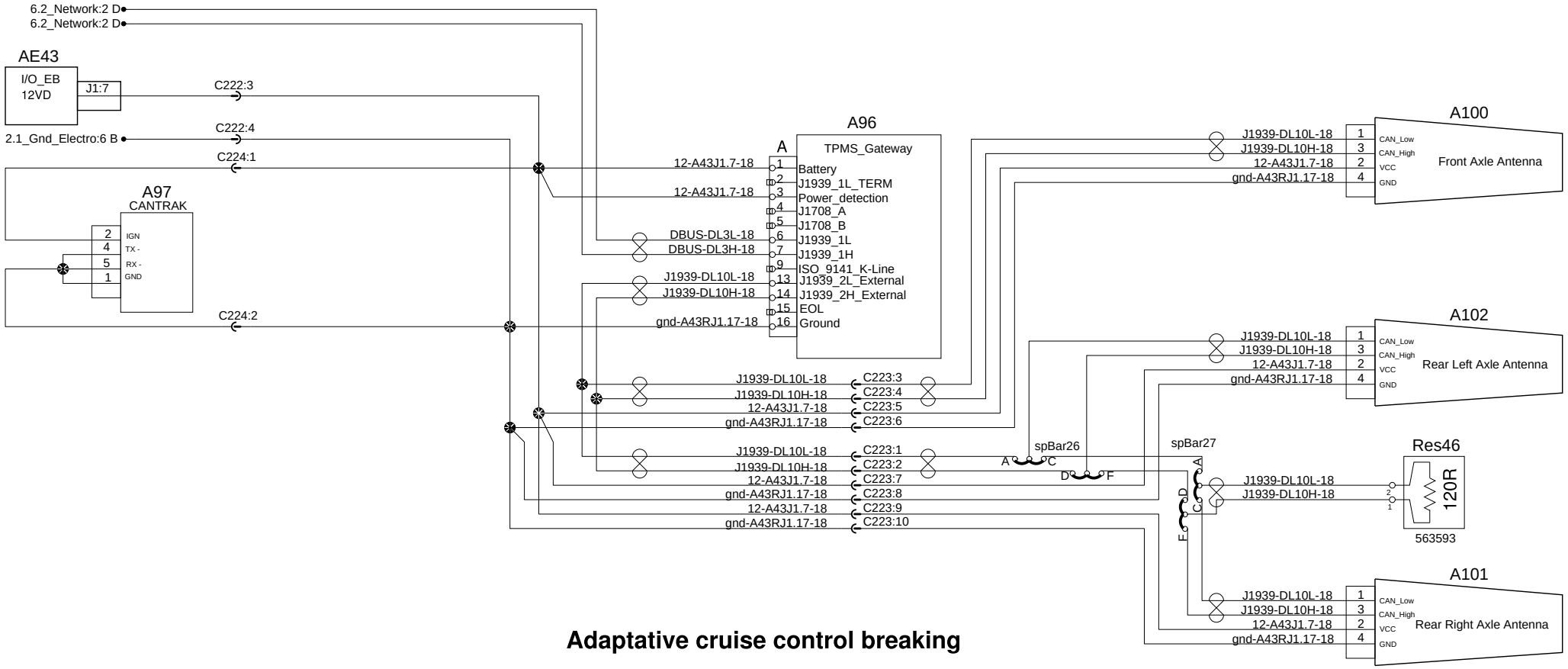

Adaptative cruise control breaking

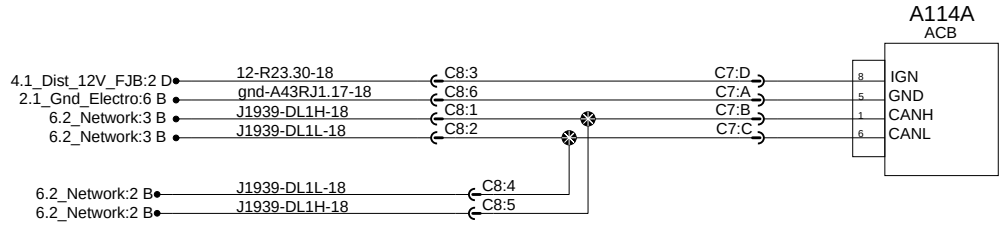

Tire pressure monitoring system

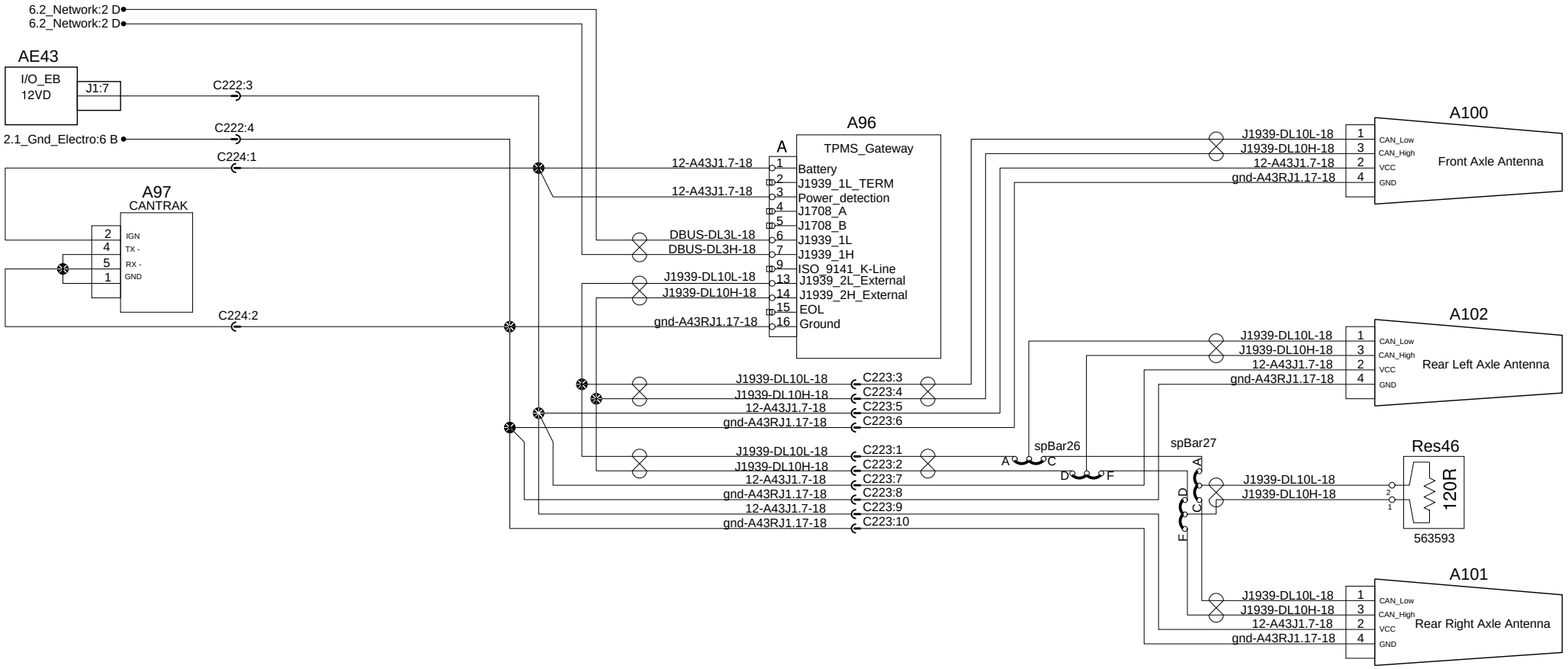

PREVOST®	WIRING DIAGRAM	No:D061670	Page:39.1	Rev:21

Tire pressure monitoring system

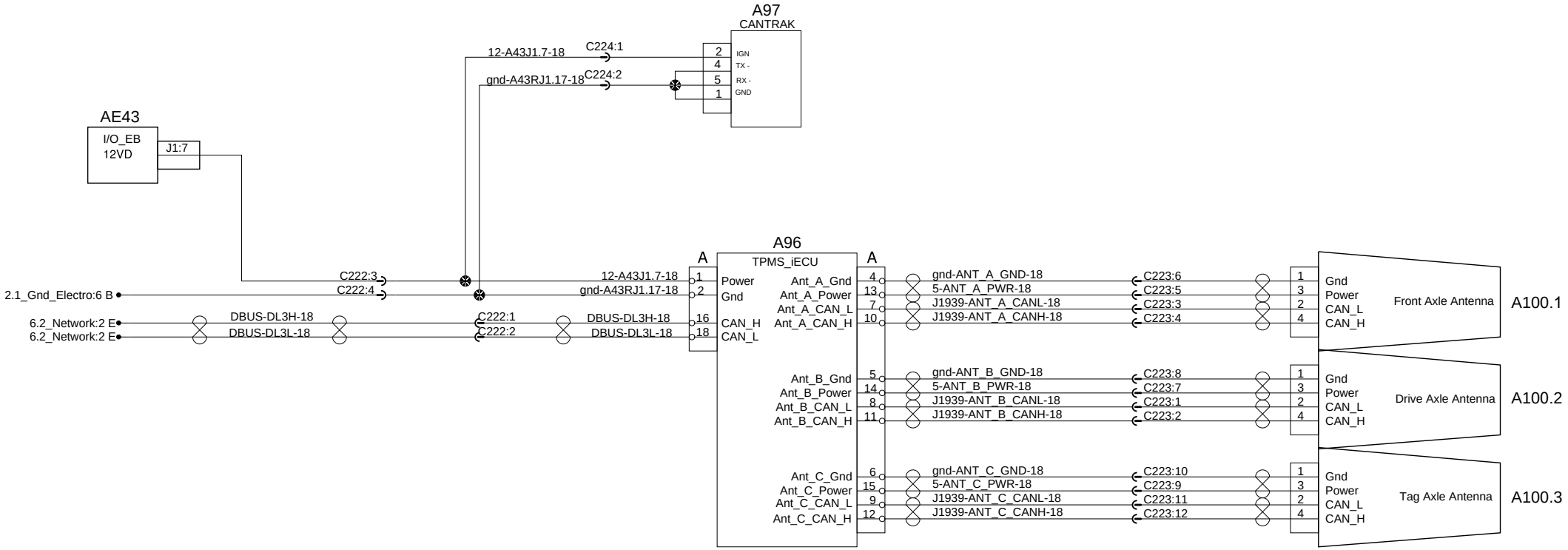

Steering multifunctions

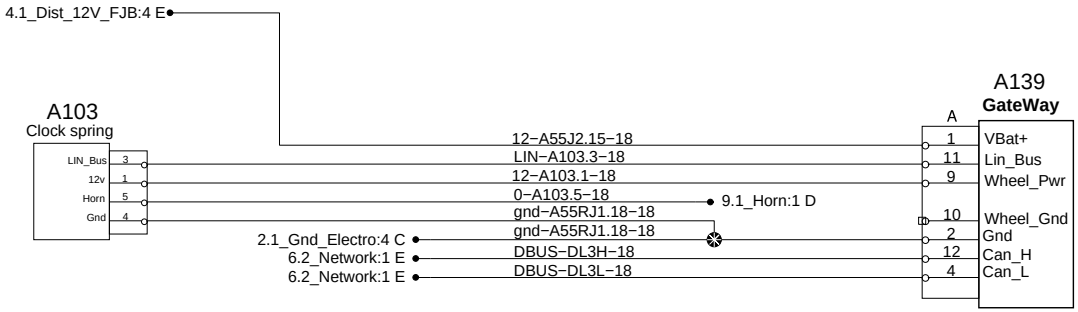

Sun visor

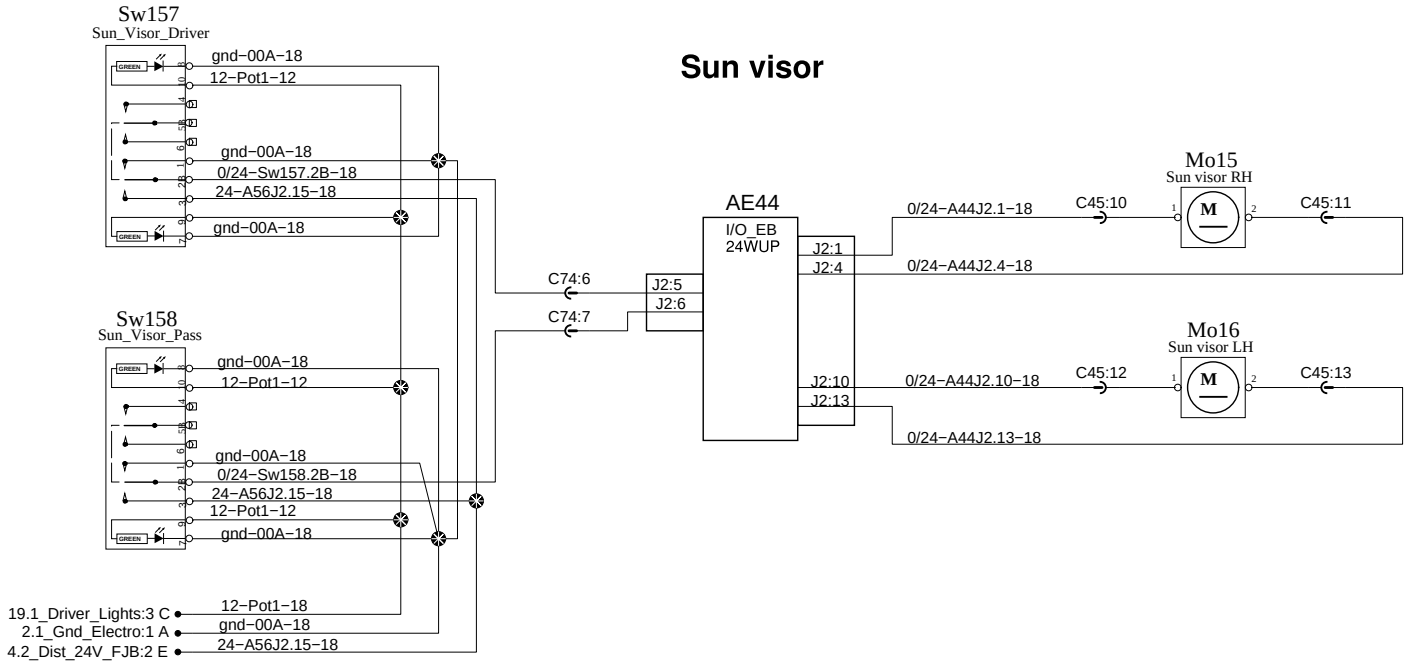

Steering multifunctions

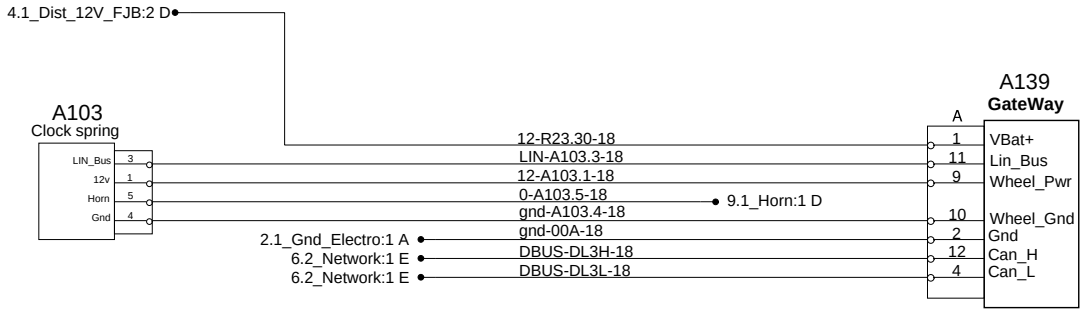

Sun visor

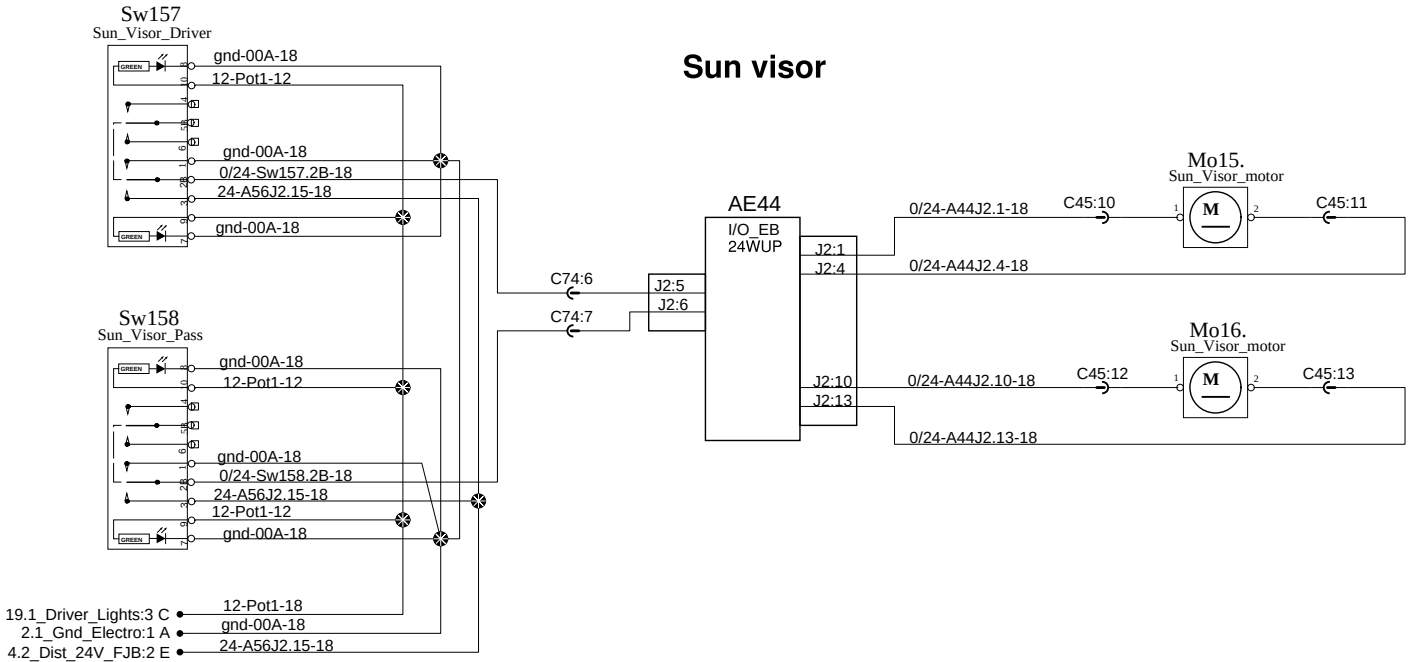

Steering multifunctions

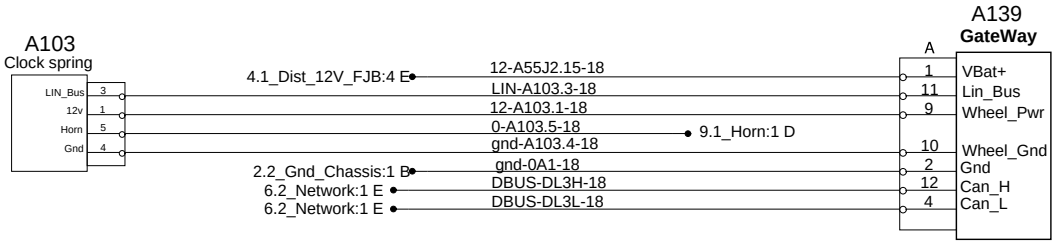

Sun visor

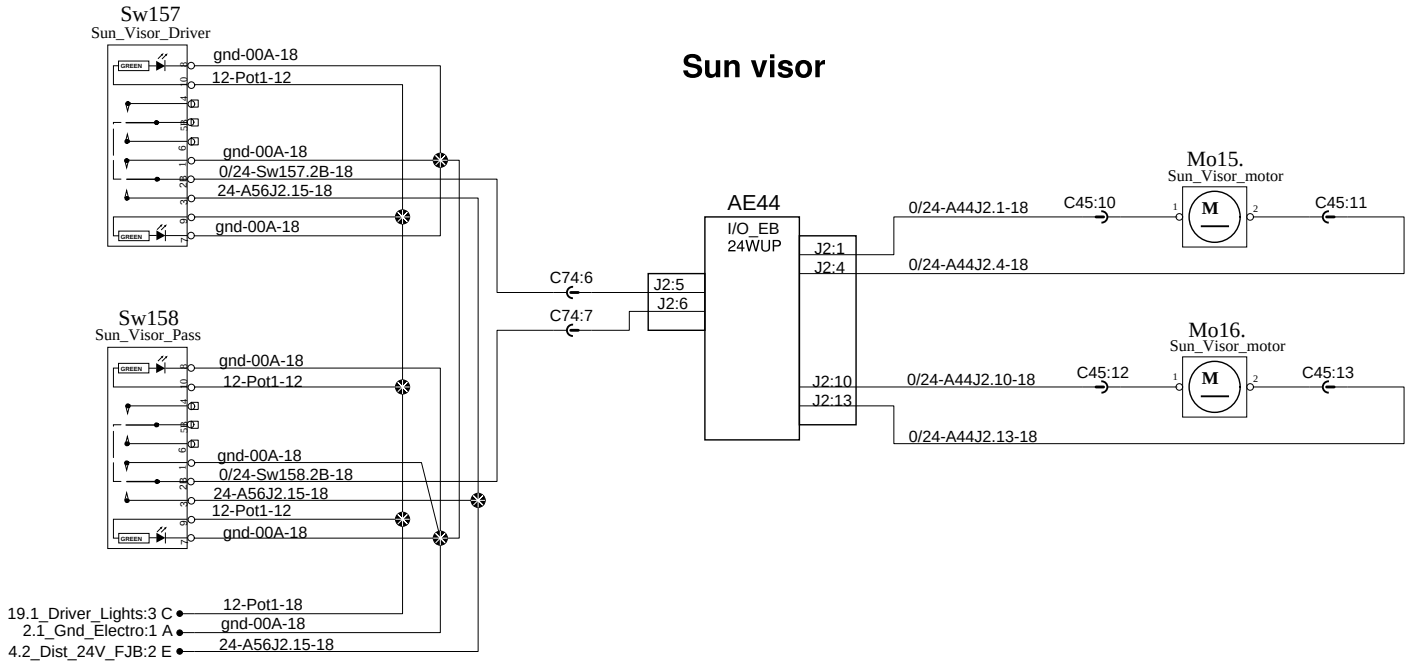

ELD / ITS J1939 Gateway

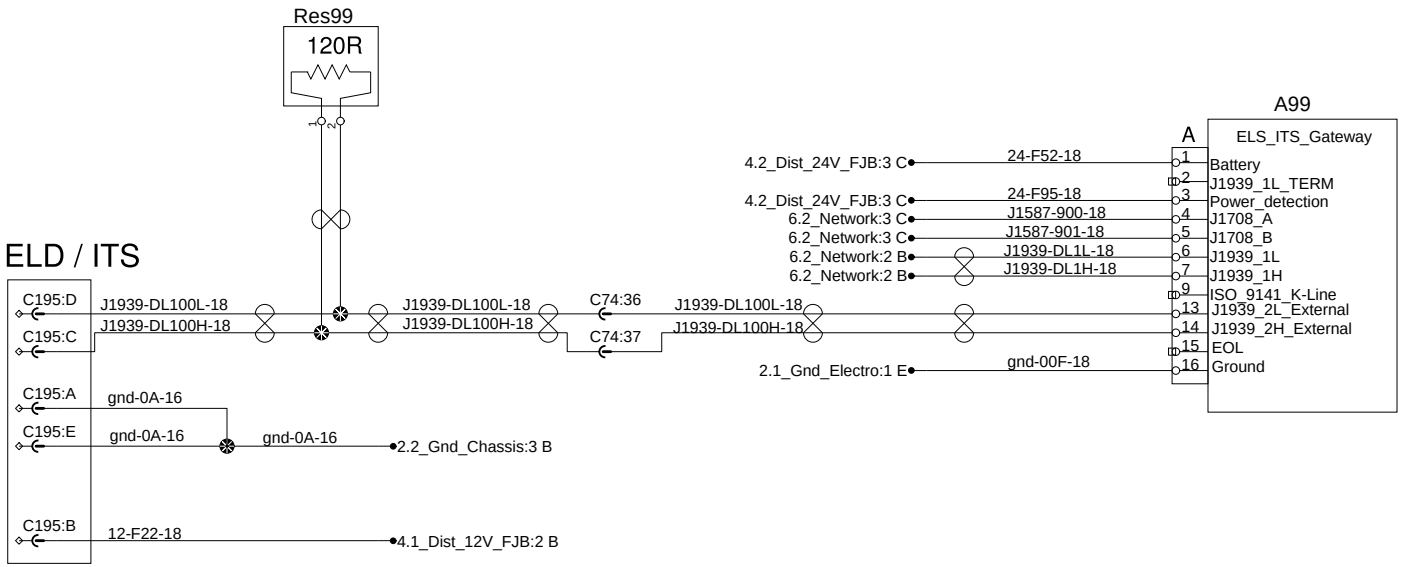

Brigade Surrunding Camera
Customer Adaptation

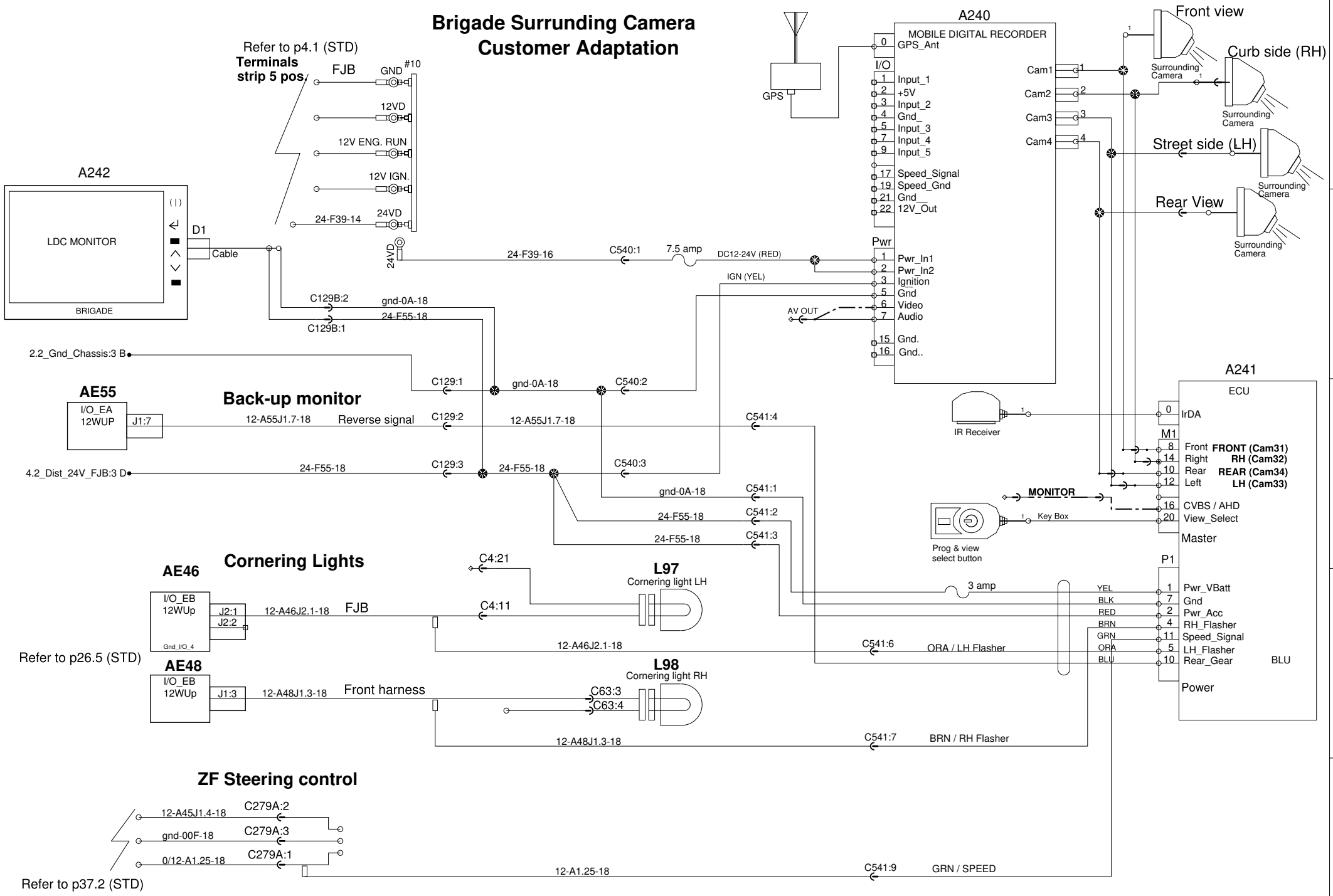

Brigade Surrunding Camera
Customer Adaptation

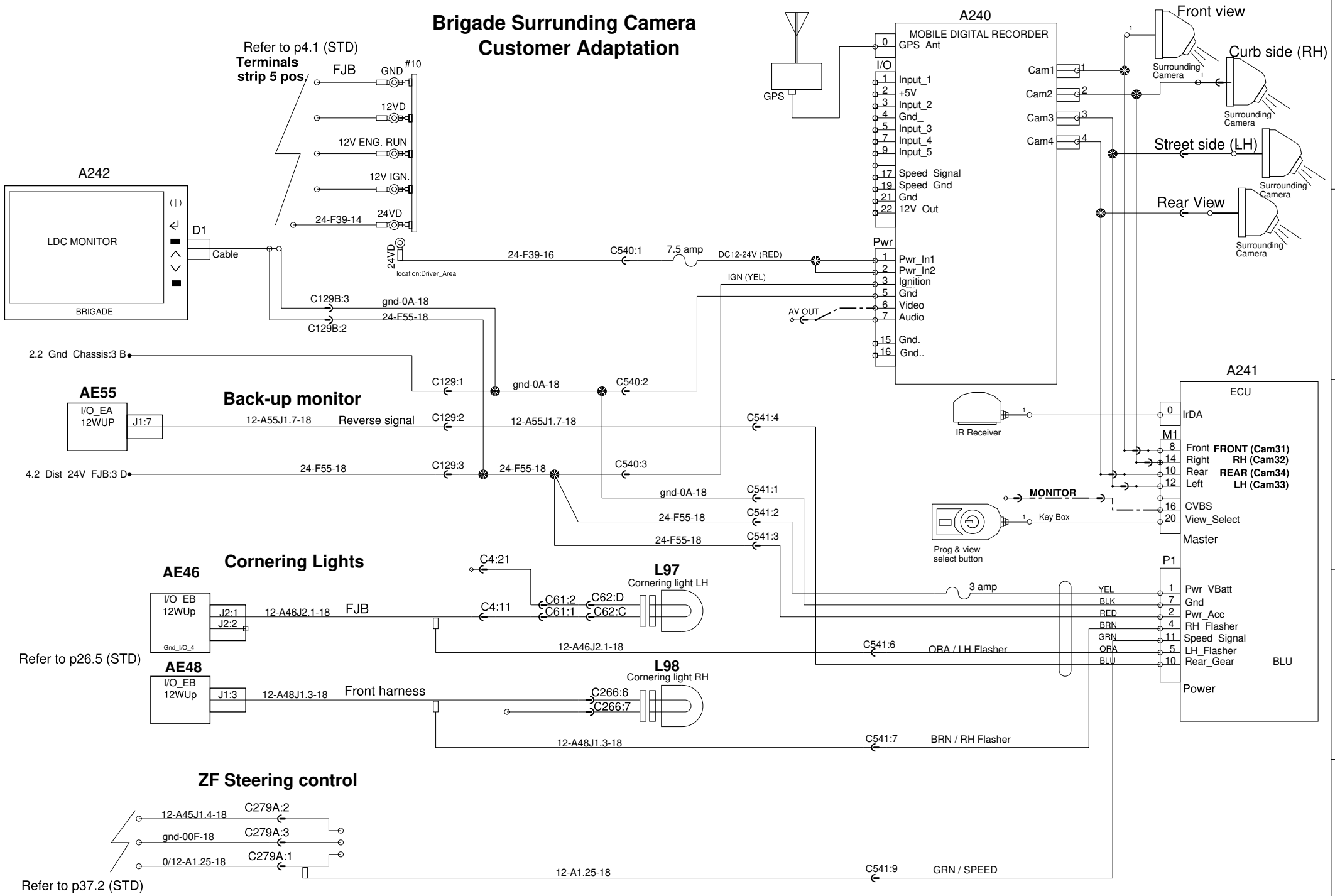

PREVOST®	WIRING DIAGRAM	No:D061670	Page:60.1	Rev:03

Perimeter Lights

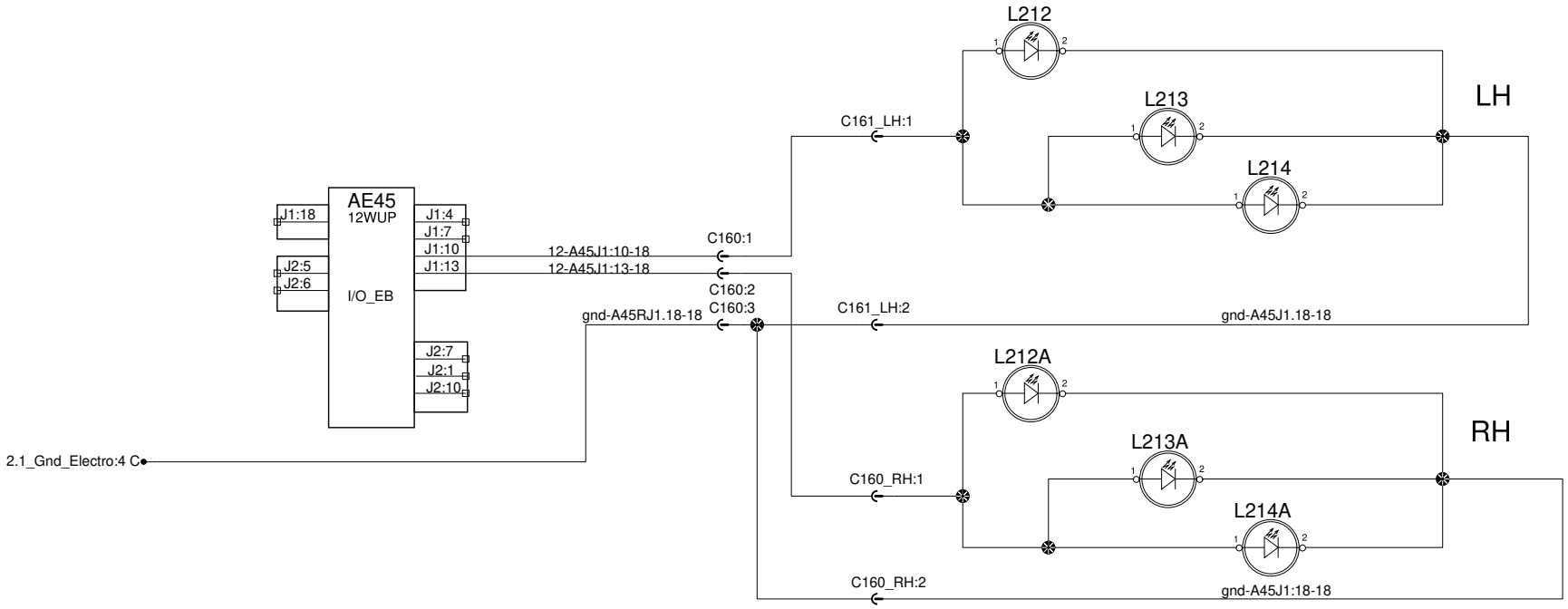

MCM CUSTOMER GATEWAY

VIP = splice with existing wire 24 wupA
WE, W5 = Use terminal include with cable

F57 VECF2:E

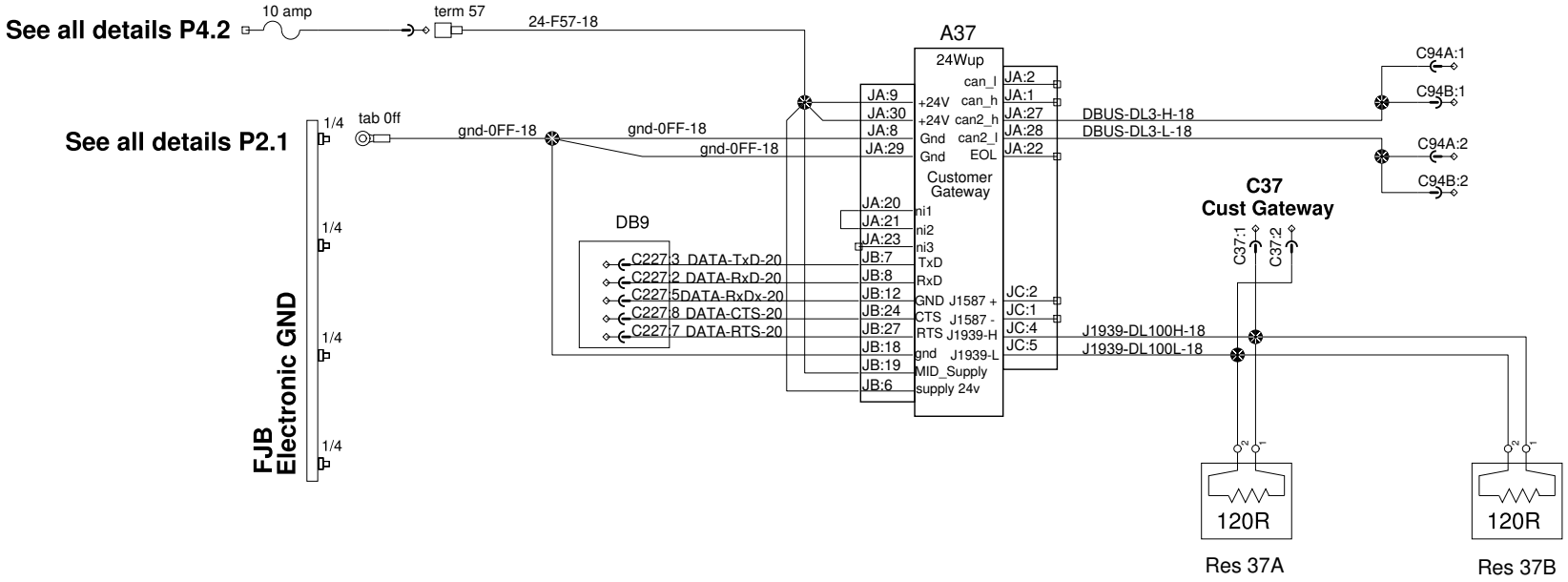

Electronic Mirrors (eMirrors)

Customer Adaptation

Info: Mirrors remains ON about 2 minutes after Ignition key turn OFF

REFER TO P4.2 (STD) FOR ALL DETAILS

24WUP

24-CB1-4 5/16

R25 563269 24V Ign **24Vi**

24-R21.B-18

gnd-00F-18

86 85 30 87 87A

VECF

CB48 Manual reset 20 amp

5 amp F95

VECF4:H VECF3:F

24-CB48-14 24-CB48-14

24-F95-18 24-F95-18

4.1_Dist_12V_FJB:4 C with R23A pin 30

Term649

Sw221 eMirrors Switch

Push to show the 3 lines

24-F95-18

24-Sw221.3-18

gnd-00A2-18

Dashboard

24VI

24Wup Elect.Ground Left Turn Signal

Reverse Signal

12-Pot1-18

4.2_Dist_24V_FJB:3 D **VECF 1G**

24-F55-18

gnd-00A2-18

R624 eMirrors 563337

31.1 Mirror 2A sw156_6

12-SW156.6-18

24-F55-18 30 87 87A 24-R624.87-16

A222M

J1 (4 ckts): 1 VIN_1, 2 GND_1, 4 SC_APC_W

J2 (6 ckts): 1 CANP_H, 3 CANP_L, 5 IO_DRV

J3 (8 ckts): 1 SC_I1, 2 SC_I2, 3 O1, 4 O2

J0 (20 ckts): 20, 17, 9, 4, 3, 12, 10, 13, 8, 7

eMirror Screen LH

24-F55-18 gnd-00A2-18 24-F95-18

DATA-CAN_Hi-18 DATA-CAN_Low-18

gnd-00A2-18

0/12-A55J1.7-18

According with Vision Sys. harness **Back probing view ERNI conn. pinout**

b10=20 b1=2 a10 a1=1 J0

APIX_Black_Conn APIX_White_Conn

Monitor LH

A222W

LH_Wing

A: 1 Defrost_Pwr, 2 Defrost_Gnd

APIX_Black_Conn APIX_White_Conn

24-R624.87-18 gnd-00A2-16

Camera LH

REFER TO P4.2 (STD) FOR ALL DETAILS

AE56 **24Vi**

I/O_EA 24WUP J2:15 J1:19

24-A56J2.15-18

C170:6 LH Console

Term654

24-A56J2.15-18 (x5)

24-A56J2.15-18

R622 LH Turn Relay 563332

86 85 30 87 87A

0-R622.85-18

24-R622.87-18

R623 RH Turn Relay 563332

0-R623.85-18

24-R623.87-18

Right Turn Signal Push Button

0-A48J2.5-18 24-Sw221.3-18

24Wup Elect.Ground 24VI

24-F55-18

A223M

J1 (4 ckts): 1 VIN_1, 2 GND_1, 4 SC_APC_W

J2 (6 ckts): 1 CANP_H, 3 CANP_L, 5 IO_DRV

J3 (8 ckts): 1 SC_I1, 2 SC_I2, 3 O1, 4 O2

J0 (20 ckts): 20, 17, 9, 4, 3, 12, 10, 13, 8, 7

eMirror Screen RH

24-F55-18 gnd-00A2-16 24-F95-18

24-F55-18

According with Vision Sys. harness **Back probing view ERNI conn. pinout**

b10=20 b1=2 a10 a1=1 J0

APIX_Black_Conn APIX_White_Conn

Monitor RH

A223W

RH_Wing

A: 1 Defrost_Pwr, 2 Defrost_Gnd

APIX_Black_Conn APIX_White_Conn

24-R624.87-18 gnd-00A2-18

Camera RH

* Provided by the manufacturer of the option
Dacar Data & coaxial cables

AE48 I/O_EB 12WUp J2:4 J2:1 J1:10 J1:7 J2:13

Term628 D622 1N5408 Added Term629 J2:5

RH Turn Signals

RH console

AE46 I/O_EB 12WUp J2:7 J2:4 J1:13 J1:4

Term646 splice670_210 Added D623 1N5408 Term647 J1:20

LH Turn Signals

FJB

C4:7

Sw1

C259: 4, 5 Head Lts call; 6 LowHi Beam

C258: 8 0/24-Sw1C258.8-18; 4 24-Sw1C258.4-16; 1; 7 24-Sw1C258.7-18; 3 24-Sw1C258.3-16; 2 24-Sw1C258.2-16; 6 24-Sw1C258.6-18 Washer ctrl.; 5 0-Sw1.5-18 Blinker

C259: 1 0-Sw1C259.1-18; 3; 2 0-Sw1C259.2-18 Flasher

C71:23 C2:27 C17:77

C71:22 C2:28 C17:78

gnd-00A-18 24-CB48-14

REFER TO P26.1 (STD) FOR ALL DETAILS

AE55 I/O_EA 12WUP J1:7

Dashboard

Term648

0/12-A55J1.7-18 44.0_Surr_Cameras_System:3 E

0/12-A55J1.7-18 C129:6

Back-up camera

REFER TO P28.1 (STD) FOR ALL DETAILS

gnd-00A-18 C129:3

24-F55-18 C129:2

Camera Washer

SO60 eMirror

gnd-A44J2:3-18 A44J2_3 **34.1 Wiper Washer 3C**

24-A44J1:7-18 A44J1_7 **34.1 Wiper Washer 2A**